WANDER PLAT D3

Residential Development

SARATOGA SPRINGS, Utah

CONSTRUCTION PLANS

MARCH 23, 2020

LEGEND:

- EXIST. WATER CAP
- EXIST. COMBO AIR VALVE (CAV)
- EXISTING BLOW OFF VALVE
- EXIST. WATER VALVE
- EXIST. FIRE HYDRANT
- EXIST. WATER LINE AND LATERAL
- EXIST. WATER METER
- EXIST. IRRIGATION LINE
- PROPOSED IRRIGATION METER
- EXISTING SEWER M.H. TAG
- EXIST. SEWER CLEANOUT
- EXIST. 4'ø SEWER M.H.
- EXIST. 5'ø SEWER M.H.
- EXIST. 6'ø SEWER M.H.
- EXIST. SEWER LINE AND LATERAL
- STORM DRAIN BOX TAG
- EXISTING LOT DRAINAGE EASEMENT
- EXIST. CATCH BASIN
- EXIST. CLEANOUT BOX
- EXIST. COMBO. BOX
- EXIST. STORM DRAIN LINE
- EXIST. MAIL BOX PAD
- EXIST. SIGNAGE
- EXIST. STREET LIGHT
- EXIST. SIDEWALK
- EXIST. CURB & GUTTER
- EXIST. LOT LINE
- PROPOSED WATER CAP
- PROPOSED COMBO AIR VALVE (CAV)
- PROPOSED BLOW OFF VALVE
- PROPOSED WATER VALVE
- PROPOSED FIRE HYDRANT
- PROPOSED WATER LINE AND LATERAL
- PROPOSED WATER METER
- PROPOSED IRRIGATION LINE
- PROPOSED IRRIGATION METER
- PROPOSED SEWER M.H. TAG
- PROPOSED SEWER CLEANOUT
- PROPOSED 4'ø SEWER M.H.
- PROPOSED 5'ø SEWER M.H.
- PROPOSED 6'ø SEWER M.H.
- PROPOSED SEWER LINE AND LATERAL
- STORM DRAIN BOX TAG
- TYPICAL 5' LOT DRAINAGE EASEMENT
- PROPOSED CATCH BASIN
- PROPOSED ALLEY CATCH BASIN
- PROPOSED 5'ø CLEANOUT BOX
- PROPOSED 6'ø CLEANOUT BOX
- PROPOSED COMBO. BOX
- PROPOSED STORM DRAIN LINE
- PROPOSED ENERGY DISSIPATER
- PROPOSED RIP-RAP PAD
- PROPOSED SIGNAGE
- PROPOSED STREET LIGHT
- PROPOSED SIDEWALK
- PROPOSED CURB & GUTTER
- PROPOSED LOT LINE
- PROPOSED ALLEY DIRECTIONAL ARROW (SYMBOL NOT TO BE PAINTED)
- PROPOSED FLARED END
- INSTALL HANDICAP RAMP PER APWA PLAN 235
- NON-TYPICAL SECTION TRANSITION AREA FOR SURFACE FLOW AROUND BUMPOUTS

NOTE: LEGEND MAY CONTAIN SYMBOLS THAT ARE NOT USED IN PLAN SET.

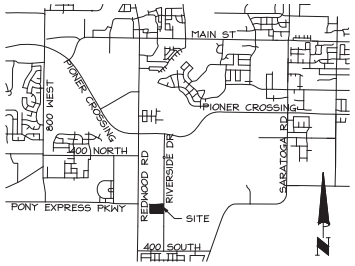

VICINITY MAP

PLAT DATA TABLE					
INFORMATION	AC.	SQ. FT.	%TOTAL	#	NOTES
TOTAL PROJECT AREA	7.482	325,902	100%		
BUILDABLE LAND	3.841	167,332	51.4%		
OPEN SPACE	1.581	68,861	21.1%		
SENSITIVE LANDS	0.00	0.00	0%		
ROW AREA	2.060	89,719	27.5%		
LANDSCAPING AREA	0.00	0.00	0%		
LOTS				68	
NET DENSITY DWELLINGS PER ACRE				9.09	

SHEET INDEX

SHEET NUMBER	SHEET TITLE	SHEET DESCRIPTION
01	TC01	COVER SHEET
02	KM01	KEY MAP
03	GN01	GENERAL NOTES
04	GN02	GENERAL NOTES
05	EX01	DEMOLITION PLAN
06	SP01	SITE PLAN
07	GR01	OVERALL GRADING PLAN
08	GR02	PRECISE GRADING PLAN
09	UT01	OVERALL UTILITY PLAN
10	UT02	OFFSITE UTILITY PLAN
11	UT03	OFFSITE UTILITY PLAN
12	SI01	SIGNAGE AND STRIPING PLAN
13	PP01	PLAN AND PROFILE – MEADOW SPRINGS AVE. & IRON BLOSSOM DRIVE
14	PP02	PLAN AND PROFILE – CRATER POOL CIRCLE, BIG RED SPRING & HAMILTON COURT
15	PP03	PLAN AND PROFILE – BAKER SPRING COVE, TULE VALLEY CIRCLE & SECOND WATER LANE
16	PP04	PLAN AND PROFILE – OFFSITE SD
17	PP05	PLAN AND PROFILE – OFFSITE SD
18	DT01	DETAILS
19	DT02	DETAILS
20	DT03	DETAILS
21	L1.00	OVERALL REFERENCE PLAN
22	L1.01	LANDSCAPE PLAN
23	L1.02	LANDSCAPE PLAN
24	L1.03	LANDSCAPE PLAN
25	L1.04	LANDSCAPE PLAN
26	L2.01	PLANTING NOTES, SCHEDULE, & DETAILS
27	L3.01	SITE DETAILS
28	L4.01	IRRIGATION NOTES & DETAILS
29	L4.02	HOA IRRIGATION SYSTEM DETAILS
30	L4.03	HOA IRRIGATION SYSTEM DETAILS
31	L4.04	HOA IRRIGATION SYSTEM DETAILS
32	L5.01	IRRIGATION PLAN
33	L5.02	IRRIGATION PLAN
34	L5.03	IRRIGATION PLAN
35	L5.04	IRRIGATION PLAN

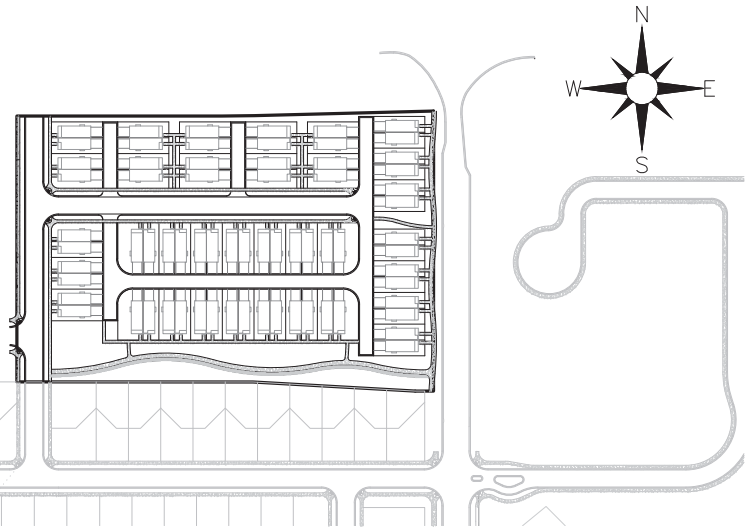

Saratoga Springs General Notes

i. Contractor shall field verify location and invert elevations of existing manholes and other utilities before staking or constructing any new sewer lines.

ii contractor shall field verify location and invert elevations of existing storm drain structures and other utilities before staking or constructing any new storm drain lines.

iii. All construction shall comply with the Standard Technical Specifications and Drawings for the City Of Saratoga Springs, Utah.

iv. Existing Utilities have been noted to the best of Engineers knowledge, It is owner's and contractor's responsibility to locate utilities in field and notify City Engineer and City if discrepancies exist prior to continuing any construction

v. Post-acceptance alterations to lighting plans or intended substitutions for approved lighting equipment shall be submitted to the City for review and approval.

vi. The City reserves the right to conduct post-installation inspections to verify compliance with the City's requirements and accepted Lighting Plan commitments, and if deemed appropriate by the City, to require remedial action at no expense to the City.

vii. All exterior lighting shall meet IESNA full-cutoff criteria.

CONTACTS

Developer / Owner
Oakwood Homes
206 E. Winchester Street
Murray, UT 84107

Engineer
Perigee Consulting – Jed Atherley, PE
(801) 380-8011 jed@perigeecld.com
9089 1300 West #90
West Jordan, UT 84088

Dominion Energy Gas
Customer Service
1-800-323-5517

Rocky Mountain Power
Customer Service
1-877-371-7070

Saratoga Springs City Engineering Department
City Engineer – Gordon Miner, PE
gminer@saratogaspringscity.com
(801) 766-6506

Saratoga Springs City Engineering Department
City Engineer – Gordon Miner, PE
gminer@saratogaspringscity.com
(801) 766-6506

Saratoga Springs City Planning Department
Planning Director – David Stroud
DStroud@saratogaspringscity.com
(801) 766-9793

3/23/2020 5:47:24 PM

PERIGEE CONSULTING
CIVIL / ENVIRONMENTAL / ENGINEERS
9089 SOUTH 1300 WEST, SUITE 200
WEST JORDAN, UT 84088
OFFICE TEL: 801.380.8011
WWW.PERIGEECLD.COM

REGISTERED PROFESSIONAL ENGINEER
No. 8035135
DANIEL CALVIN GOODWIN
STATE OF UTAH

SARATOGA SPRINGS

CITY ENGINEER DATE

MARK	DESCRIPTION	DATE	APPR.

DESIGNED BY: D
DRAWN BY: SKS
CHK BY: JTA
DATE: MARCH 2020
SUBMITTED BY:
SCALE: 1" = 20'
PLOTTED BY:
SCALE/PLOTTED NO:
CONTRACT NO: 08897
FILE NAME: N:\08897 Jordan Promenade Oakwood Homes\Cadd\PlanSet\03\D3 TC01.dwg
3/23/2020 5:47:24 PM
REV:

WANDER
PHASE D3
COVER SHEET

SHEET NUMBER
01
OF 19 SHEETS
DRAWING NAME
TC01

CALL BEFORE YOU DIG!
BLUE STAKES 1-800-662-4111

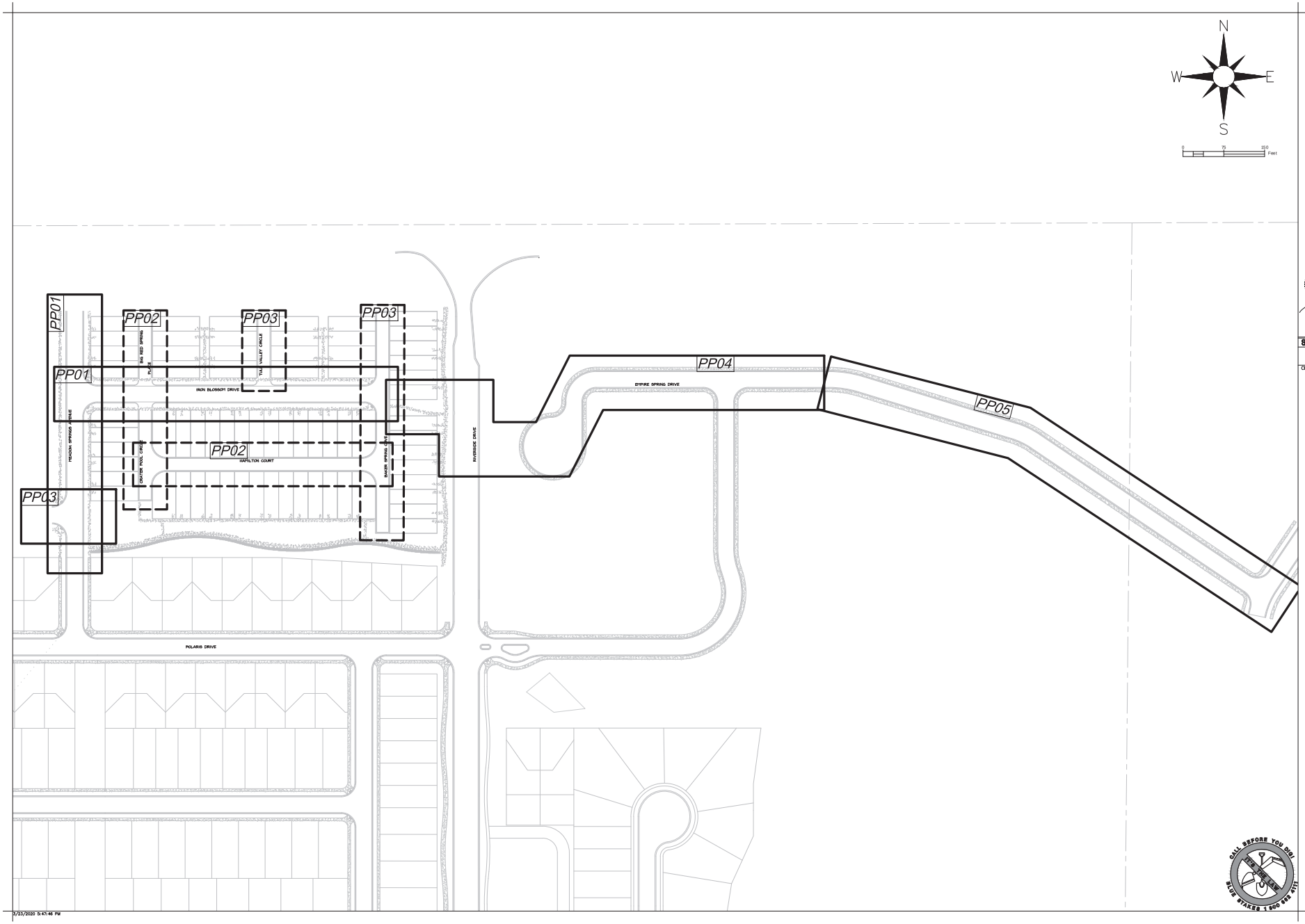

PERIGEE CONSULTING
CIVIL & STRUCTURAL ENGINEERS
9089 SOUTH 1300 WEST, SUITE 100
WEST JORDAN, UT 84088
801.628.6004 TEL 801.590.6611 FAX
WWW.PERIGEECIVIL.COM

REGISTERED PROFESSIONAL ENGINEER
No. 8035135
05/19/2020
DANIEL CALVIN GOODWIN
STATE OF UTAH

SARATOGA SPRINGS

CITY ENGINEER DATE

MARK	DESCRIPTION	DATE	APPR.

DESIGNED BY: D
DWN BY: SKS
CKD BY: JTA
SUBMITTED BY:
FILE NAME: N:\00697 Jordan Promenade Oakwood Homes\Cadd\PP\Plat D3\02 KM01
SIZE: ANSI D
PLOTTED BY:
DATE: MARCH 2020
SOLICITATION NO.:
CONTRACT NO.: 00697
PLOT DATE: 3/23/2020 5:47:46 PM
REV:

WANDER
PHASE D3
KEY MAP

SHEET NUMBER
02
OF 19 SHEETS
DRAWING NAME
KM01

3/23/2020 5:47:46 PM

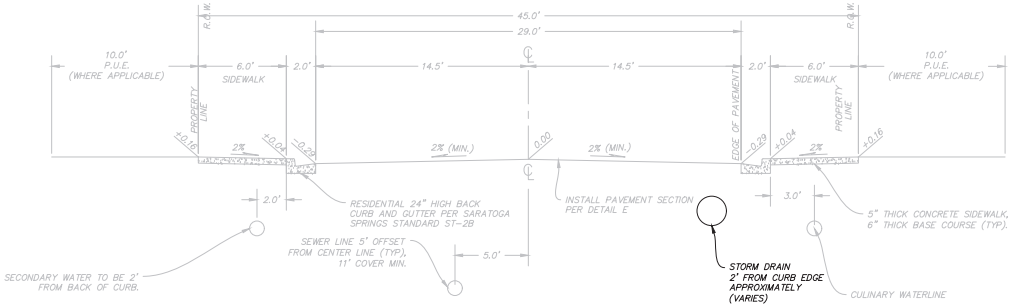

A VAR **POLARIS DRIVE**
SCALE: 1" = 4'

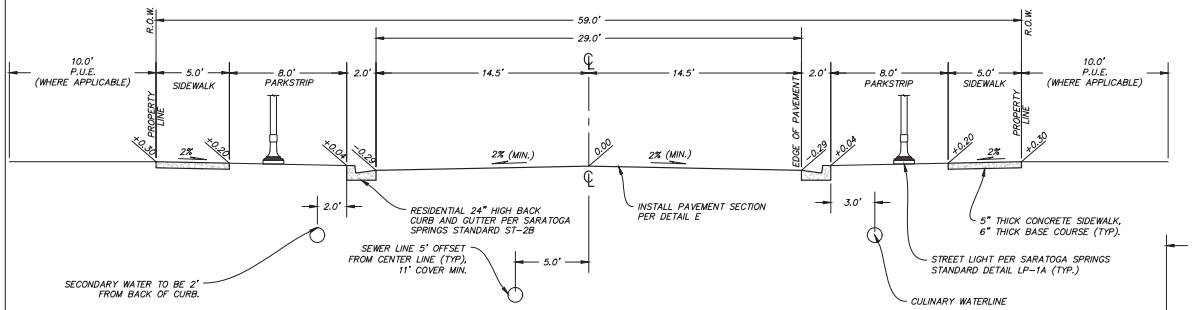

C GN02 **IRON BLOSSOM ROW**
MEADOW SPRING AVENUE
SCALE: 1" = 4'

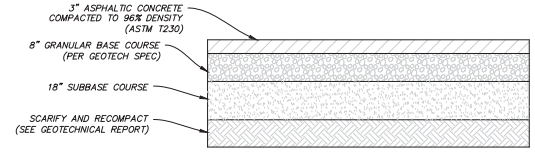

E GN02 **PAVEMENT SECTION (RESIDENTIAL)**
SCALE: N.T.S.

SEE GEOTECHNICAL EVALUATION REPORT "WANDER TAKEDOWN 3" PREPARED BY WESTERN TECHNOLOGIES INC. DECEMBER 12, 2019.

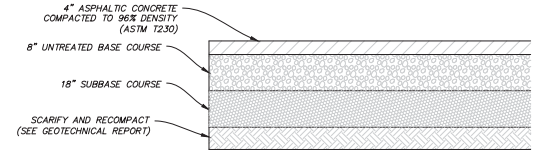

F GN02 **PAVEMENT SECTION (COLLECTOR)**
SCALE: N.T.S.

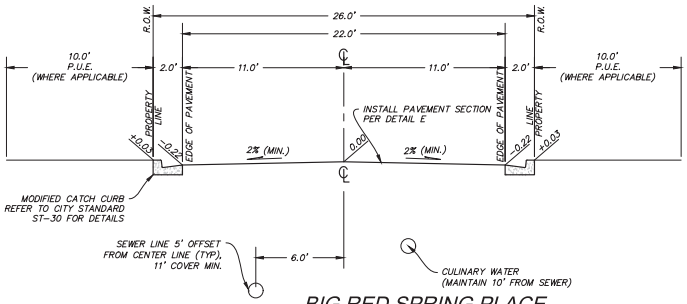

BIG RED SPRING PLACE
TULE VALLEY CIRCLE
BAKER SPRING COVE
CRATER POOL CIRCLE
HAMILTON COURT

B GN02
SCALE: 1" = 4'

D GN02 **RIVERSIDE DRIVE (COLLECTOR)**
SCALE: 1" = 4'

PERIGEE CONSULTING
8888 SOUTH 1300 WEST, SUITE 200
CENTERVILLE, UT 84014
WEST JORDAN, UT 84088
WWW.PERIGEECONSULTING.COM

REGISTERED PROFESSIONAL ENGINEER
No. 8035135
DANIEL CALVIN GOODWIN
STATE OF UTAH

SARATOGA SPRINGS
CITY ENGINEER DATE

NO.	DATE	DESCRIPTION	APPR.

DESIGNED BY: D
DRAWN BY: SKS
CHK BY: JTA
SUBMITTED BY:
DATE: MARCH 2020
SCALE: NTS
CONTRACT NO. C8897
FILE NAME: N:\2896P Jordan Promenade Delaware Homes\Cadd\Plot 03\04-GN02
PLOTTED BY: Jordan Goodwin
PLOT DATE: 3/23/2020 5:47:57 PM

WANDER
PHASE D3
GENERAL NOTES

SHEET NUMBER
04
OF 19 SHEETS
DRAWING NAME
GN02

CALL BEFORE YOU DIG!
BLUE STAKES 1-800-662-4111

3/23/2020 5:47:57 PM

Saratoga Springs General Notes

A RIGHT OF WAY ENCROACHMENT PERMIT MUST BE OBTAINED FROM THE CITY OF SARATOGA SPRINGS PRIOR TO DOING ANY WORK IN THE EXISTING RIGHT-OF-WAY. CONTACT MARK EDWARDS AT (801) 766-9796 EXT. 118.

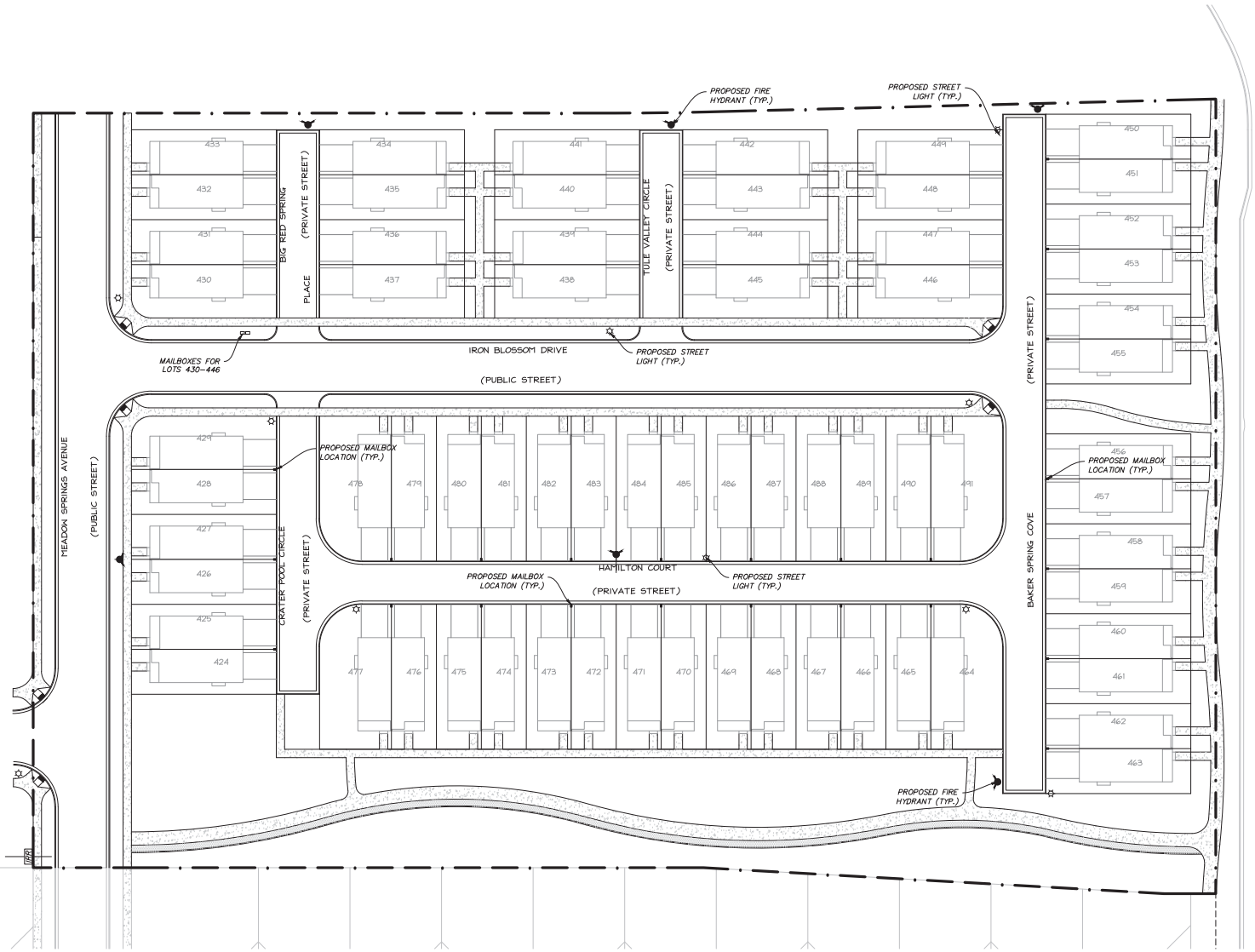

MEADOW SPRINGS AVENUE	QTY
ROADWAY PAVEMENT (SQFT)	15,332
UNTREATED BASE COURSE (SQFT)	15,332
GRANULAR BORROW (SQFT)	15,332
CURB (LNFT)	900
MONUMENTS (EACH)	2
ADA RAMPS (EACH)	4

IRON BLOSSOM DRIVE	QTY
ROADWAY PAVEMENT (SQFT)	14,246
UNTREATED BASE COURSE (SQFT)	14,246
GRANULAR BORROW (SQFT)	14,246
CURB (LNFT)	939
MONUMENTS (EACH)	2

BIG RED SPRING PLACE	QTY
ROADWAY PAVEMENT (SQFT)	2,441
UNTREATED BASE COURSE (SQFT)	2,441
GRANULAR BORROW (SQFT)	2,441
CURB (LNFT)	250

CRATER POOL CIRCLE	QTY
ROADWAY PAVEMENT (SQFT)	4,559
UNTREATED BASE COURSE (SQFT)	4,559
GRANULAR BORROW (SQFT)	4,559
CURB (LNFT)	362
MONUMENTS (EACH)	1

TULE VALLEY CIRCLE	QTY
ROADWAY PAVEMENT (SQFT)	2,441
UNTREATED BASE COURSE (SQFT)	2,441
GRANULAR BORROW (SQFT)	2,441
CURB (LNFT)	250

HAMILTON COURT	QTY
ROADWAY PAVEMENT (SQFT)	7,911
UNTREATED BASE COURSE (SQFT)	7,911
GRANULAR BORROW (SQFT)	7,911
CURB (LNFT)	718

BAKER SPRING COVE	QTY
ROADWAY PAVEMENT (SQFT)	10,663
UNTREATED BASE COURSE (SQFT)	10,663
GRANULAR BORROW (SQFT)	10,663
CURB (LNFT)	860
MONUMENTS (EACH)	2
ADA RAMPS (EACH)	2

QUANTITES PROVIDED AS AN ESTIMATE ONLY. CONTRACTOR TO VERIFY QUANTITIES AT BID.

PERIGEE CONSULTING
CIVIL / ENVIRONMENTAL / SURVEY
8689 SOUTH 1300 WEST, SUITE 200
OREM, UT 84097 TEL: 801.785.1776
WEST JORDAN, UT 84088
WWW.PERIGEECONSULTING.COM

REGISTERED PROFESSIONAL ENGINEER
No. 8035135
DANIEL CALVIN GOODWIN
STATE OF UTAH

SARATOGA SPRINGS

CITY ENGINEER DATE

NO.	DESCRIPTION	DATE	APPR.

DESIGNED BY: D
DRAWN BY: SKS
CHK BY: JTA
SUBMITTED BY:
APPROVED BY:
DATE: MARCH 2020
SCALE: 1"=50'
PROJECT NO. 08897
FILE NAME: N:\08897 Jordan Promenade Oakwood Homes\Civil\Plat 2\PDR SP01
PLOTTED BY: Jordan Goodwin
PLOTTED ON: 3/23/2020 5:48:45 PM

WANDER
PHASE D3
SITE PLAN

SHEET NUMBER
06
OF 19 SHEETS
DRAWING NAME
SP01

CALL BEFORE YOU DIG!
BLUE STAKES 1-800-662-4111

3/23/2020 5:48:45 PM