COYOTE HILLS SUBDIVISION
PRELIMINARY PLAT

INCLUDING A VACATION OF LOTS 4 AND 5 OF WEST LAKE ESTATES PLAT "D"

CITY OF SARATOGA SPRINGS, UTAH COUNTY, UTAH

CONTAINS 44 LOTS AND 17.37 ACRES

LOCATED IN SECTION 22, TOWNSHIP 5 SOUTH, RANGE 1 WEST,
SALT LAKE BASE AND MERIDIAN, UTAH COUNTY, UTAH.

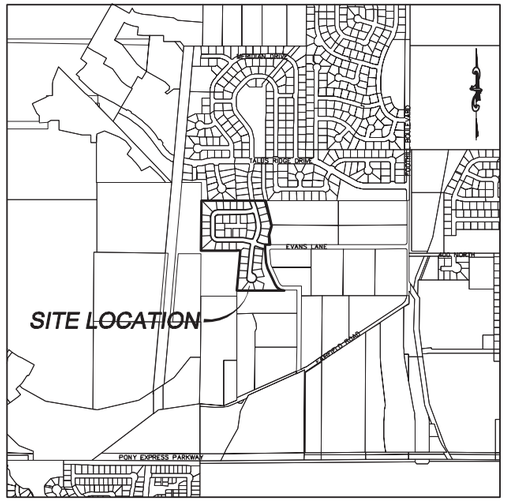

VICINITY MAP

–NTS–

LEGEND

- FOUND BRASS CAP
- SET 5/8" IRON PIN
- CALCULATED POINT, NOT SET
- SUBDIVISION MONUMENT
- XXXX X ADDRESSES
- PROPERTY BOUNDARY
- RIGHT–OF–WAY LINE
- LOT LINE
- SECTION LINE
- EASEMENT
- CENTERLINE

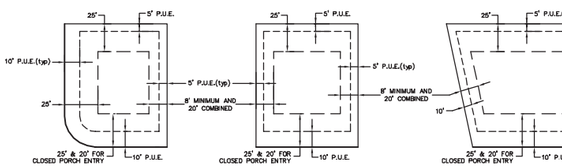

CORNER LOT | INTERIOR LOT | CUL–DE–SAC OR KNUCKLE LOT

BY SIGNING THIS PLAT, THE FOLLOWING UTILITY COMPANIES ARE APPROVING THE: (A) BOUNDARY, COURSE, DIMENSIONS AND INTENDED USE OF THE RIGHT–OF–WAY AND EASEMENT GRANTS OF RECORD; (B) LOCATION OF EXISTING UNDERGROUND AND UTILITY FACILITIES; (C) CONDITIONS OR RESTRICTIONS GOVERNING THE LOCATION OF THE FACILITIES WITHIN THE RIGHT–OF–WAY, AND EASEMENT GRANTS OF RECORD, AND UTILITY FACILITIES WITHIN THE SUBDIVISION. "APPROVING" SHALL HAVE THE MEANING IN UTAH CODE SECTION 10–9A–603(4)(c)(ii). THE FOLLOWING NOTES ARE NOT ENDORSED OR ADOPTED BY SARATOGA SPRINGS AND DO NOT SUPERSEDE CONFLICTING PLAT NOTES OR SARATOGA SPRINGS POLICIES.

NOTES:

1. PLAT MUST BE RECORDED WITHIN 24 MONTHS OF FINAL PLAT APPROVAL, OR FOR PHASED DEVELOPMENTS, WITHIN 24 MONTHS OF RECORDATION OF MOST RECENT PHASE. THE FIRST FINAL PLAT APPROVAL WAS GRANTED ON THE ___ DAY OF _____, 20__.
2. PRIOR TO BUILDING PERMITS BEING ISSUED, SOIL AND/OR GEOTECHNICAL TESTING STUDIES MAY BE REQUIRED ON EACH LOT AS DETERMINED BY THE CITY BUILDING OFFICIAL.
3. THIS PLAT MAY BE SUBJECT TO A DEVELOPMENT AGREEMENT THAT SPECIFIES THE CONDITIONS OF DEVELOPING, BUILDING, AND USING PROPERTY WITHIN THIS PLAT. SEE CITY RECORDER FOR DETAILS.
4. PLAT IS SUBJECT TO "INSTALLATION OF IMPROVEMENTS AND BOND AGREEMENT NO. _____," WHICH REQUIRES THE CONSTRUCTION AND WARRANTY OF IMPROVMENTS IN THIS SUBDIVISION. THESE OBLIGATIONS RUN WITH THE LAND AND ARE BINDING ON SUCCESSORS, AGENTS, AND ASSIGNS OF DEVELOPER. THERE ARE NO THIRD–PARTY RIGHTS OR BENEFICIARIES UNDER THIS AGREEMENT.
5. BUILDING PERMITS WIL NOT BE ISSUED UNTIL ALL REQUIRED IMPROVEMENTS HAVE BEEN INSTALLED PER CITY STANDARDS AND ALL FEES INCLUDING IMPACT AND CONNECTION FEES ARE PAID.
6. ALL OPEN SPACE, COMMON SPACE, AND TRAIL IMPROVEMENTS LOCATED HEREIN ARE TO BE INSTALLED BY OWNER AND MAINTAINED BY A HOMEOWNERS ASSOCIATION UNLESS SPECIFIED OTHERWISE ON EACH IMPROVMENT.
7. REFERENCES HERERIN TO DEVELOPER OR OWNER SHALL APPLY TO BOTH, AND ANY SUCH REFERENCE SHALL ALSO APPLY TO SUCCESSORS, AGENTS, AND ASSIGNS.
8. NO CITY MAINTENANCE SHALL BE PROVIDED FOR STREETS AND IMPROVEMENTS DESIGNATED AS "PRIVATE" ON THIS PLAT.
9. "LOTS/UNITS" MAY BE SUBJECT TO ASSOCIATION BYLAWS, ARTICLES OF INCORPORATION AND CC&R'S."
10. A GEOTECHNICAL REPORT HAS BEEN COMPLETED BY EARTHTEC ENGINEERING PROJECT NO. 198120, WHICH ADDRESSES SOIL AND GROUNDWATER CONDITIONS, PROVIDES ENGINEERING DESIGN CRITERIA, AND RECOMMENDS MITIGATION MEASURES IF PROBLEMATIC CONDITIONS WERE ENCOUNTERED. THE CITY ASSUMES NO LIABILITY OR RESPONSIBILITY FOR ANY RELIANCE ON THE INFORMATION OR LACK THEREOF IN THE REPORT.
11. AGRICULTURAL USES, OPERATIONS, AND RIGHTS ARE ADJACENT TO OR NEAR THE PLAT AND LOTS. THE LOTS IN THIS PLAT ARE SUBJECT TO THE SIGHTS, SOUNDS, ODORS, NUISANCES, AND ASPECTS ASSOCIATED WITH AGRICULTURAL OPERATIONS, USES AND RIGHTS. THESE USES AND OPERATIONS MAY OCCUR AT ALL TIMES OF THE DAY AND NIGHT INCLUDING WEEKENDS AND HOLIDAYS. THE CITY IS NOT RESPONSIBLE OR LIABLE FOR THESE USES AND IMPACTS AND WILL NOT RESTRICT ANY GRANDATHERED AGRICULTUREAL USE FROM CONDINUING TO OCCUR LAWFULLY.
12. DRAINAGE ACROSS PROPERTY LINES SHALL NOT EXCEED THAT WHICH EXISTED PRIOR TO GRADING. EXCESS OR CONCENTRATED DRAINAGE SHALL BE CONTAINED ON SITE OR DIRECTED TO AN APPROVED DRAINAGE FACILITY. LOTS SHALL FALL A MINIMUM OF 6 INCHES WITHIN THE FIRST 10 FEET.

BOUNDARY DESCRIPTION

A parcel of land located in Section 22, Township 5 South, Range 1 West, Salt Lake Base and Meridian, located in Saratoga Springs, Utah County, Utah, being more particularly described as follows: Beginning at a point which lies N00°25'12"E 37.16 feet along the Section line from the West Quarter Corner of Section 22, Township 5 South, Range 1 West, Salt Lake Base and Meridian; and running thence N00°25'12"E 640.56 feet; thence N89°53'35"E 816.02 feet; thence S14°43'19"E 216.69 feet; thence S13°35'21"E 114.83 feet; thence S14°52'55"W 121.30 feet; thence S04°34'59"E 125.29 feet; thence S89°53'59"W 66.24 feet; thence S00°06'01"E 78.48 feet; thence S05°52'45"E 153.46 feet; thence along the arc of a 228.00 foot radius curve to the left a distance of 74.98 feet, (the chord bears S15°17'59"E 74.64 feet); thence S24°43'13"E 228.92 feet; thence along the arc of a 128.00 foot radius curve to the left a distance of 146.07 feet, (the chord bears S57°24'42"E 138.27 feet); thence S89°53'49"W 610.79 feet; thence N05°34'43"E 510.65 feet; thence along the arc of a 50.00 foot radius curve to the right a distance of 34.63 feet, (the chord bears N73°25'27"W 33.94 feet); thence S36°24'36"W 12.31 feet; thence West 462.18 feet to the point of beginning. Containing 17.37 acres, 44 lots, and 4 parcels.

CURVE TABLE

CURVE	RADIUS	LENGTH	CHORD DIST.	CHORD BRG.	DELTA
C1	228.00	74.98	74.64	S 15°17'59" E	18°50'28"
C2	128.00	146.07	138.27	S 57°24'42" E	65°22'57"
C3	50.00	34.63	33.94	S 73°25'27" E	39°40'56"
C4	154.50	49.60	49.39	S 17°19'31" E	18°23'39"
C5	200.00	41.19	41.12	N 20°37'21" W	11°47'59"
C6	184.00	56.55	56.33	S 16°55'59" E	17°36'35"
C7	170.50	13.86	13.85	N 23°24'33" W	4°39'26"
C8	125.00	41.77	41.58	S 17°42'07" E	19°08'52"
C9	229.50	50.28	50.18	N 20°59'57" W	12°33'11"
C10	15.00	25.23	22.36	N 27°05'55" E	96°21'32"
C11	15.00	23.56	21.21	N 59°43'19" W	90°00'00"
C12	200.00	51.02	50.88	N 82°35'08" E	14°36'54"
C13	170.50	43.49	43.37	N 82°35'08" E	14°36'54"
C14	229.50	40.74	40.68	N 80°21'47" E	10°10'12"
C15	229.50	17.80	17.80	N 87°40'14" E	4°26'42"
C16	57.50	89.79	80.94	S 45°09'24" W	89°28'22"
C17	87.00	6.43	6.43	S 87°46'29" W	4°14'12"
C18	87.00	59.69	58.52	S 66°00'09" W	39°18'28"
C19	87.00	59.69	58.52	S 26°41'42" W	39°18'28"
C20	87.00	10.05	10.05	S 03°43'50" W	6°37'16"
C21	28.00	43.72	39.42	S 45°09'24" W	89°28'22"
C22	57.50	90.74	81.61	S 44°47'24" E	90°25'13"
C23	28.00	44.19	39.74	S 44°47'24" E	90°25'13"
C24	87.00	3.15	3.15	S 00°37'01" E	2°04'27"
C25	87.00	59.69	58.52	S 21°18'28" E	39°18'28"
C26	87.00	59.69	58.52	S 60°36'56" E	39°18'28"
C27	87.00	14.78	14.76	S 85°08'05" E	9°43'51"
C28	250.00	99.60	98.94	N 78°35'14" W	22°49'32"
C29	279.50	39.61	39.58	N 85°56'24" W	8°07'11"
C30	279.50	71.74	71.54	N 74°31'38" W	14°42'21"
C31	15.00	23.56	21.21	N 67°49'32" E	90°00'00"
C32	220.50	87.84	87.26	N 78°35'14" W	22°49'32"
C33	15.00	21.89	20.00	N 25°22'31" W	83°35'54"
C34	354.60	106.49	106.09	S 14°13'21" W	17°12'22"
C35	384.10	18.17	18.17	S 06°58'28" W	2°42'37"
C36	384.10	54.26	54.22	S 12°22'36" W	8°05'39"
C37	325.10	33.04	33.03	S 08°31'52" W	5°49'24"
C38	325.10	17.77	17.77	S 13°00'32" W	3°07'57"
C39	15.00	25.72	22.68	S 63°42'01" W	98°15'02"
C40	15.00	23.56	21.21	S 22°10'28" E	90°00'00"
C41	200.00	56.95	56.76	S 75°19'55" E	16°18'54"
C42	170.50	68.22	67.77	S 78°38'14" E	22°55'33"
C43	229.50	51.26	51.16	S 73°34'24" E	12°47'53"
C44	25.00	32.33	30.12	N 42°55'33" W	74°05'36"
C45	25.00	33.06	30.71	S 32°16'07" E	75°46'33"
C46	62.50	69.94	66.35	N 38°05'46" W	64°07'15"
C47	62.50	32.04	31.69	N 08°39'04" E	29°22'25"
C48	62.50	57.16	55.19	N 49°32'26" E	52°24'18"
C49	62.50	57.19	55.22	S 78°02'35" E	52°25'41"
C50	62.50	57.20	55.22	S 25°36'40" E	52°26'08"
C51	62.50	5.47	5.47	S 03°06'47" W	5°00'46"
C52	300.00	196.60	193.10	N 04°03'06" E	37°32'51"
C53	270.50	49.99	49.92	N 17°31'51" E	10°35'22"
C54	270.50	111.71	110.92	N 00°24'20" E	23°39'41"
C55	270.50	15.56	15.56	N 13°04'25" W	3°17'49"
C56	329.50	27.23	27.22	N 20°27'30" E	4°44'05"
C57	329.50	78.99	78.80	N 11°13'23" E	13°44'08"
C58	329.50	79.11	78.92	N 02°31'22" W	13°45'22"
C59	329.50	30.60	30.59	N 12°03'41" W	5°19'16"

DATA TABLE:

TOTAL PROJECT AREA: 17.37 acres
NUMBER OF LOTS: 44
SENSITIVE LANDS: 0 acres
OPEN SPACE/LANDSCAPING: 2.45 acres
AREA OF ROW: 3.55 acres
BUILDABLE AREA: 4.86 acres
DENSITY: 2.53 units/acre

ATLAS ENGINEERING L.L.C.
PHONE: 801–655–0566
FAX: 801–655–0109
946 EAST 800 NORTH
SUITE A
SPANISH FORK, UT 84660

SURVEYOR'S CERTIFICATE

I, BARRY L. PRETTYMAN DO HEREBY CERTIFY THAT I AM A REGISTERED LAND SURVEYOR AND THAT I HOLD CERTIFICATE NO. 166406, IN ACCORDANCE WITH THE PROFESSIONAL ENGINEERS AND LAND SURVEYORS LICENSING ACT FOUND IN TITLE 58, CHAPTER 22 OF THE UTAH CODE. I FURTHER CERTIFY THAT BY AUTHORITY OF THE OWNERS, I HAVE MADE A SURVEY OF THE TRACT OF LAND SHOWN ON THIS PLAT AND DESCRIBED BELOW, HAVE SUBDIVIDED SAID TRACT OF LAND INTO LOTS, STREETS, AND EASEMENTS, HAVE COMPLETED A SURVEY OF THE PROPERTY DESCRIBED ON THIS PLAT IN ACCORDANCE WITH UTAH CODE SECTOIN 17–23–17, HAVE VERIFIED ALL MEASUREMENTS, AND HAVE PLACED MONUMENTS AS REPRESENTED ON THE PLAT. I FURTHER CERTIFY THAT EVERY EXISTING RIGHT–OF–WAY AND EASEMENT GRANT OF RECORD FOR UNDERGROUND FACILITIES, AS DEFINED IN UTAH CODE SECTION 54–8a–2, AND FOR OTHER UTILITY FACILITIES, IS ACCURATELY DESCRIBED ON THIS PLAT, AND THAT THIS PLAT IS TRUE AND CORRECT TO THE BEST OF MY KNOWLEDGE. I ALSO CERTIFY THAT I HAVE FILED, OR WILL FILE WITHIN 90 DAYS OF THE RECORDATION OF THIS PLAT, A MAP OF THE SURVEY I HAVE COMPELTED WITH THE UTAH COUNTY SURVEYOR.

BOUNDARY DESCRIPTION

SEE TO THE LEFT

Containing 17.37 acres, 44 lots, and 4 parcels.

OWNER'S DEDICATION

KNOW ALL MEN BE THESE PRESENTS THAT _____ UNDERSIGNED OWNER(S) OF THE ABOVE DESCRIBED TRACT OF LAND HAVING CAUSED SAME TO BE SUBDIVIDED INTO LOTS AND STREETS TO BE HERE AFTER KNOWN AS:

COYOTE HILLS SUBDIVISION

AND DO HEREBY DEDICATE FOR THE PERPETUAL USE OF THE PUBLIC AND CITY ALL PARCELS, LOTS, STREETS, EASEMENTS, RIGHT–OF–WAY, AND PUBLIC AMENITIES SHOWN ON THIS PLAT AS INTENDED FOR PUBLIC OR CITY USE. THE OWNER(S) AND ALL AGENTS, SUCCESSORS, AND ASSIGNS VOLUNTARILY DEFEND, INDEMNIFY, AND SAVE HARMLESS THE CITY AGAINST ANY EASEMENTS OR OTHER ENCUMBRANCE ON A DEDICATED STREET, EASEMENT, OR RIGHT–OF–WAY THAT WILL INTERFERE WITH THE CITY'S USE, MAINTENANCE, AND OPERATION OF THE STREETS OR UTILITIES. THE OWNER(S) AND ALL AGENTS, SUCCESSORS, AND ASSIGNS ASSUME ALL LIABLITY WITH RESPECT TO THE CREATION OF THIS SUBDIVISION, THE ALTERATION OF THE GROUND SURFACE, VEGETATION, DRAINAGE, OR SURFACE OR SUB–SURFACE WATER FLOWS WITHIN THIS SUBDIVISION, AND THE DEVELOPMENT ACTIVITY WITHIN THIS SUBDIVISION BY THE OWNERS AND ALL AGENTS, SUCCESSORS, AND ASSIGNS.

IN WITNESS WHEREOF I HAVE SET FORTH MY HAND THIS _____ DAY OF _____, A.D. 20__.

SIGNATURE	PRINT NAME	TITLE & ENTITY
SIGNATURE	PRINT NAME	TITLE & ENTITY
SIGNATURE	PRINT NAME	TITLE & ENTITY

OWNER'S ACKNOWLEDGEMENT

STATE OF UTAH }
COUNTY OF UTAH } S.S.

ON THIS DAY OF , A.D. 20 , PERSONALLY APPEARED BEFORE ME , WHO BEING BY ME DULY SWORN, DID PROVE TO ME ON THE BASIS OF SATISFACTORY EVIDENCE TO BE THE PERSON(S) WHOSE NAME(S) IS/ARE SUBSCRIBED TO THE WITHIN INSTRUMENT, AND ACKNOWLEDGED TO ME THAT HE/SHE/THEY EXECUTED THE SAME IN HIS/HER/THEIR AUTHORIZED CAPACITY(IES), AND THAT BY HIS/HER/THEIR SIGNATURE(S) ON THE INSTRUMENT THE PERSON(S), OR THE ENTITITY UP BEHALF OF WHICH THE PERSON(S) ACTED, EXECUTED THIS PLAT WITH THE FULL AUTHORITY OF THE OWNER(S).

I CERTIFY UNDER PENALT OF PERJURY UNDER THE LAWS OF THE STATE OF UTAH THAT THE FOREGOING PARAGRAPH IS TRUE AND CORRECT.

WITNESS MY HAND AND OFFICIAL SEAL.

NOTARY PUBLIC FULL NAME

COMMISION NUMBER

MY COMMISSION EXPIRES

A NOTARY PUBLIC COMMISSIONED IN UTAH

APPROVAL BY LEGISLATIVE BODY

THE CITY COUNCIL OF THE CITY OF SARATOGA SPRINGS, COUNTY OF UTAH, APPROVES THIS SUBDIVISION SUBJECT TO THE CONDITIONS AND RESTRICTIONS STATED HEREON, AND HEREBY ACCEPTS THE DEDICATION OF ALL STREETS, EASEMENTS, AND OTHER PARCELS OF LAND INTENDED FOR THE PUBLIC PURPOSE OF PERPETUAL USE OF THE PUBLIC.

THIS ___DAY OF_____, A.D. 20___.

CITY MAYOR | ATTEST_____ CITY RECORDER

ROCKY MOUNTAIN POWER

1. PURSUANT TO UTAH CODE ANN. 54–3–27 THIS PLAT CONVEYS TO THE OWNER(S) OR OPERATORS OF UTILITY FACILITIES A PUBLIC UTILITY EASEMENT ALONG WITH ALL THE RIGHTS AND DUTIES DESCRIEBED THEREIN.
2. PURSUANT TO UTAH CODE ANN. 17–27a–603(4)(c)(ii) ROCKY MOUNTAIN POWER ACCEPTS DELIVERY OF THE PUE AS DESCRIBED IN THIS PLAT AND APPROVES THIS PLAT SOLELY FOR THE PURPOSE OF CONFIRMING THAT THE PLAT CONTAINS PUBLIC UTILITY EASEMENTS AND APPROXIMATES THE LOCATION OF THE PUBLIC UTILITY EASEMENTS, BUT DOES NOT WARRANT THEIR PRECISE LOCATION. ROCKY MOUNTAIN POWER MAY REQUIRE OTHER EASEMENTS IN ORDER TO SERVE THIS DEVELOPMENT. THIS APPROVAL DOES NOT AFFECT ANY RIGHT THAT ROCKY MOUNTAIN POWER HAS UNDER:
   a. A RECORDED EASEMENT OR RIGHT–OF–WAY
   b. THE LAW APPLICABLE TO PRESCRIPTIVE RIGHTS
   c. TITLE 54, CHAPER 8a, DAMAGE TO UNDERGROUND UTILITY FACILITIES OR
   d. ANY OTHER PROVISION OF LAW

APPROVED THIS___DAY OF_____, A.D. 20___.

ROCKY MOUNTAIN POWER

DOMINION ENERGY QUESTAR CORPORATION

DOMINION ENERGY QUESTAR CORPORATION APPROVES THIS PLAT SOLELY FOR THE PURPOSE OF CONFIRMING THAT THE PLAT CONTAINS PUBLIC UTILITY EASEMENTS. DOMINION ENERGY QUESTAR CORPORATION MAY REQUIRE OTHER EASEMENTS IN ORDER TO SERVE THIS DEVELOPMENT. THIS APPROVAL DOES NOT CONSTITUTE ABROGATION OR WAIVER OF ANY OTHER EXISTING RIGHTS, OBLIGATIONS OR LIABILITIES PROVIDED BY LAW OR EQUITY. THIS APPROVAL DOES NOT CONSTITUTE ACCEPTANCE, APPROVAL OR ACKNOWLEDGEMENT OF ANY TERMS CONTAINED IN THE PLAT, INCLUDING THOSE SET FORTH IN THE OWNERS DEDICATION AND THE NOTES AND DOES NOT CONSTITUTE A GUARANTEE OF PARTICULAR TERMS OF NATURAL GAS SERVICE. FOR FURTHER INFORMATION PLEASE CONTACT DOMINION ENERGY QUESTAR CORPORATIONS RIGHT–OF–WAY DEPARTMENT AT 800–366–8532.

APPROVED THIS___DAY OF_____, A.D. 20___.

BY_____

TITLE_____
DOMINION ENERGY QUESTAR CORP.

PUBLIC WORKS DIRECTOR

APPROVED BY THE PLANNING DIRECTOR ON THIS___DAY OF_____, A.D. 20__

PUBLIC WORKS DIRECTOR

CENTURY LINK

APPROVED THIS___DAY OF_____, A.D. 20__.

CENTURY LINK

PLANNING DIRECTOR

APPROVED BY THE PLANNING DIRECTOR ON THIS___DAY OF_____, A.D. 20__

PLANNING DIRECTOR

LAND USE AUTHORITY

APPROVED BY THE LAND USE AUTHORITY ON THIS___DAY OF_____, A.D. 20__

LAND USE AUTHORITY

SARATOGA SPRINGS ATTORNEY

APPROVED BY SARATOGA SPRINGS ATTORNEY ON THIS___DAY OF_____, A.D. 20__

SARATOGA SPRINGS ATTORNEY

COMCAST CABLE TELEVISION

APPROVED THIS___DAY OF_____, A.D. 20__.

COMCAST CABLE TELEVISION

CITY ENGINEER

APPROVED BY THE CITY ENGINEER ON THIS ___DAY OF_____, A.D. 20__

CITY ENGINEER

FIRE CHIEF

APPROVED BY SARATOGA SPRINGS FIRE CHIEF ON THIS___DAY OF_____, A.D. 20__

CITY FIRE CHIEF

LEHI CITY POST OFFICE

APPROVED BY POST OFFICE REPRESENTATIVE ON THIS___DAY OF_____, A.D. 20__

LEHI CITY POST OFFICE REPRESENTATIVE

COYOTE HILLS SUBDIVISION PRELIMINARY PLAT

LOCATED IN THE NORTHWEST CORNER OF SECTION 22, TOWNSHIP 5 SOUTH, RANGE 1 WEST, SALT LAKE BASE AND MERIDIAN
CITY OF SARATOGA SPRINGS, UTAH COUNTY, UTAH

SHEET 1 OF 2

SURVEYOR'S SEAL	CITY ENGINEER SEAL	CLERK–RECORDER SEAL

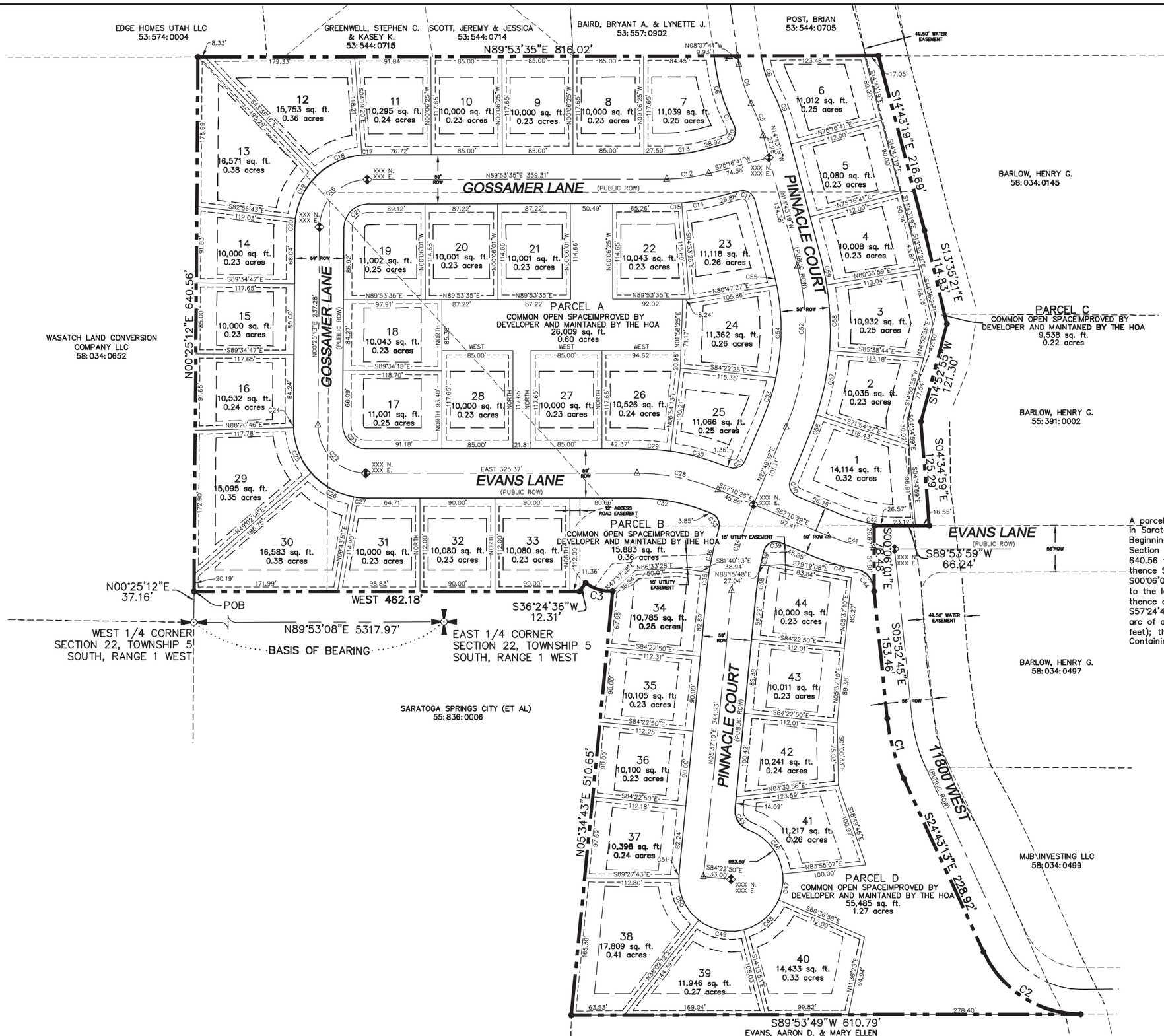

COYOTE HILLS BOUNDARY DESCRIPTION

A parcel of land located in Section 22, Township 5 South, Range 1 West, Salt Lake Base and Meridian, located in Saratoga Springs, Utah County, Utah, being more particularly described as follows:
Beginning at a point which lies N00°25'12"E 37.16 feet along the Section line from the West Quarter Corner of Section 22, Township 5 South, Range 1 West, Salt Lake Base and Meridian; and running thence N00°25'12"E 640.56 feet; thence N89°53'35"E 816.02 feet; thence S14°43'19"E 216.69 feet; thence S13°35'21"E 114.83 feet; thence S14°52'55"W 121.30 feet; thence S04°34'59"E 125.29 feet; thence S89°53'59"W 66.24 feet; thence S00°06'01"E 78.48 feet; thence S05°52'45"E 153.46 feet; thence along the arc of a 228.00 foot radius curve to the left a distance of 74.98 feet, (the chord bears S15°17'59"E 74.64 feet); thence S24°43'13"E 228.92 feet; thence along the arc of a 128.00 foot radius curve to the left a distance of 146.07 feet, (the chord bears S57°24'42"E 138.27 feet); thence S89°53'49"W 610.79 feet; thence N05°34'43"E 510.65 feet; thence along the arc of a 50.00 foot radius curve to the right a distance of 34.63 feet, (the chord bears N73°25'27"W 33.94 feet); thence S36°24'36"W 12.31 feet; thence West 462.18 feet to the point of beginning.
Containing 17.37 acres, 44 lots, and 4 parcels.

10 60 180
0 30 120

(24"x36")
SCALE 1" = 60'
(11"x17")
SCALE 1" = 120'

COYOTE HILLS SUBDIVISION PRELIMINARY PLAT

INCLUDING A VACATION OF LOTS 4 AND 5 OF WEST LAKE ESTATES PLAT "D"
CITY OF SARATOGA SPRINGS, UTAH COUNTY, UTAH
CONTAINS 44 LOTS AND 17.37 ACRES
LOCATED IN SECTION 22, TOWNSHIP 5 SOUTH, RANGE 1 WEST, SALT LAKE BASE AND MERIDIAN, UTAH COUNTY, UTAH.

Z:\2018\18-126 Coyote Hills\CADD\PRELIMINARY\09-PRELIMINARY PLAT.dwg 8/23/2019 3:07:34 PM MDT

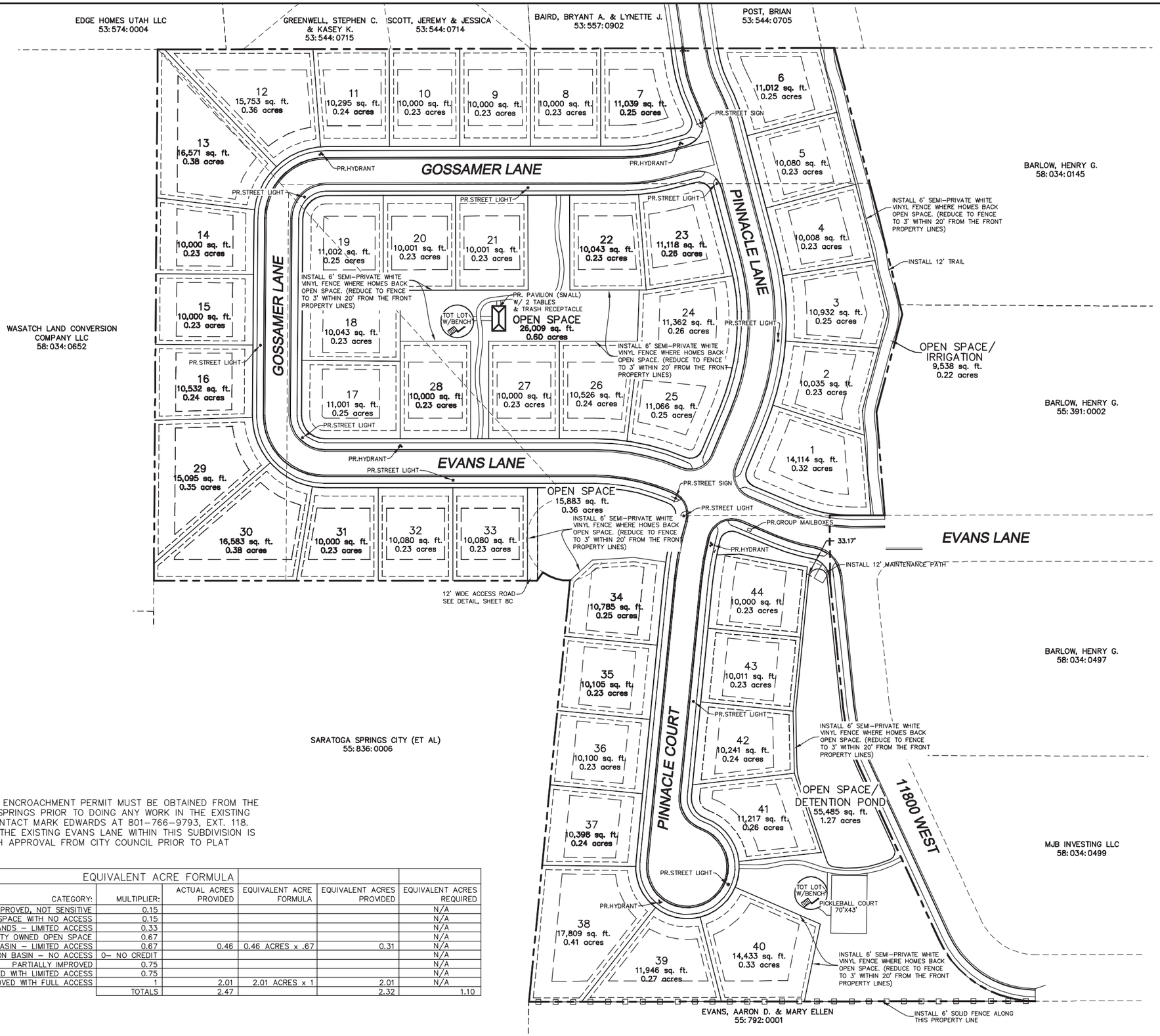

NOTES:

1. A RIGHT-OF-WAY ENCROACHMENT PERMIT MUST BE OBTAINED FROM THE CITY OF SARATOGA SPRINGS PRIOR TO DOING ANY WORK IN THE EXISTING RIGHT-OF-WAY. CONTACT MARK EDWARDS AT 801-766-9793, EXT. 118.
2. THE PORTION OF THE EXISTING EVANS LANE WITHIN THIS SUBDIVISION IS TO BE VACATED WITH APPROVAL FROM CITY COUNCIL PRIOR TO PLAT RECORDATION.

EQUIVALENT ACRE FORMULA					
CATEGORY:	MULTIPLIER:	ACTUAL ACRES PROVIDED	EQUIVALENT ACRE FORMULA	EQUIVALENT ACRES PROVIDED	EQUIVALENT ACRES REQUIRED
UNIMPROVED, NOT SENSITIVE	0.15				N/A
OPEN SPACE WITH NO ACCESS	0.15				N/A
SENSITIVE LANDS – LIMITED ACCESS	0.33				N/A
IMPROVEMENT OF EXISTING CITY OWNED OPEN SPACE	0.67				N/A
DETENTION BASIN – LIMITED ACCESS	0.67	0.46	0.46 ACRES x .67	0.31	N/A
DETENTION BASIN – NO ACCESS	0– NO CREDIT				N/A
PARTIALLY IMPROVED	0.75				N/A
FULLY IMPROVED WITH LIMITED ACCESS	0.75				N/A
FULLY IMPROVED WITH FULL ACCESS	1	2.01	2.01 ACRES x 1	2.01	N/A
	TOTALS	2.47		2.32	1.10

SHEET NO. 4

NO.	REVISIONS	BY	DATE
1			
2			
3			
4			
5			
6			
7			
8			
9			
10			
11			
12			

OVERALL SITE PLAN AND PHASING

SARATOGA SPRINGS, UTAH COUNTY, UTAH

COYOTE HILLS SUBDIVISION

ATLAS ENGINEERING L.L.C.
PHONE: 801-655-0566
FAX: 801-655-0109
946 EAST 800 NORTH SUITE A
SPANISH FORK, UT 84660

Z:\2018\18-26 Coyote Hills\CADD\PRELIMINARY\04-SITE PLAN.dwg 8/23/2019 2:48:56 PM MDT

Exhibit G

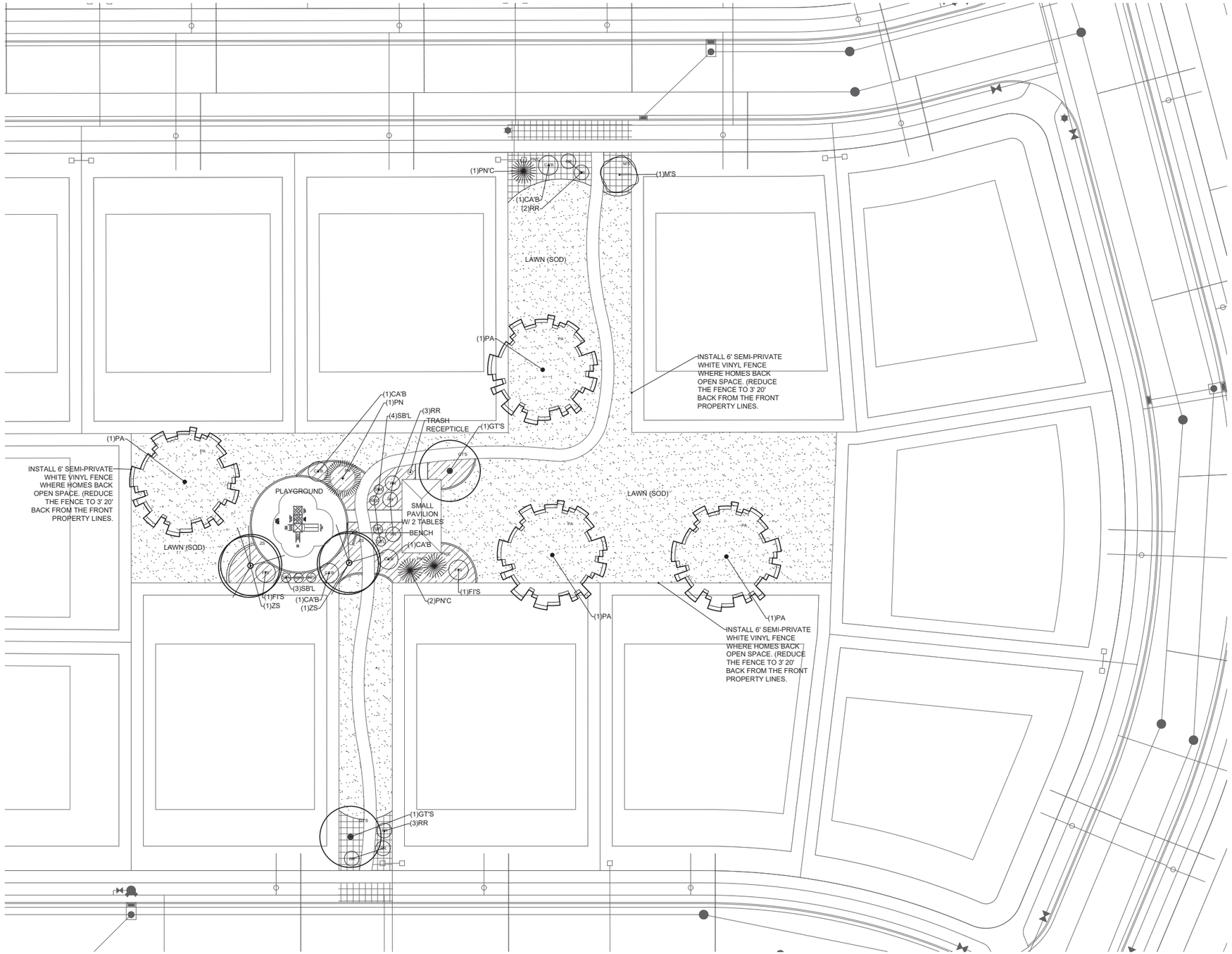

TREE LEGEND (TOTAL PLANT COUNT)

SYMBOL	BOTANICAL NAME	COMMON NAME	QTY.	SIZE	HYDROZONE	SPECIAL NOTES
PN	PINUS NIGRA	AUSTRIAN PINE	8	6'-8' TALL	11.7%	
PN'C	PINUS NIGRA 'COMPACTA'	COMPACT AUSTRIAN BLACK PINE	25	6'-8' TALL	36.8%	
PA	PLATANUS ACERFOLIA	LONDON PLANETREE	10	2" CAL.	14.7%	
GT'S	GLEDITSIA TRIACANTHOS INERMIS 'SKYCOLE'	SKYLINE HONEY LOCUST	10	2" CAL.	14.7%	
ZS	ZELKOVA SERRATA	JAPANESE ZELKOVA	9	2" CAL.	13.2%	
M'S	MALUS X 'SPRING SNOW' CRABAPPLE	SPRING SNOW CRABAPPLE	6	2" CAL.	8.8%	

SHRUB LEGEND

SYMBOL	BOTANICAL NAME	COMMON NAME	QTY.	SIZE	HYDROZONE	SPECIAL NOTES
CA'B	CORNUS ALBA 'BAILHALO'	IVORY HALO DOGWOOD	18	5 GAL	21.2%	
FI'S	FORSYTHIA X INTERMEDIA 'SPRING GLORY'	SPRING GLORY FORSYTHIA	17	5 GAL	20%	
RR	ROSA X WOODSII	WOODS ROSE	26	5 GAL	30.6%	
SB'L	SPIREA BUMALDA 'LIMEMOUND'	LIMEMOUND SPPIREA	24	5 GAL	28.2%	

SITE MATERIALS

SYMBOL	SITE MATERIAL	QUANTITY	SPECIAL NOTES
	3/4" OQUIRRH GRAVEL (DeWitt 5 OZ. WEED BARRIER FABRIC TO BE INSTALLED IN ALL PLANTER AREAS)	19,836 SQ.FT. (183.7 CU.YD)	LOCATED WHERE SPECIFIED
	LAWN (SEED) AREA	78,640 SQ.FT.	

NEW TURF AREAS TO BE SEEDED WITH 18% "BLUESTAR KENTUCKY BLUEGRASS, 19% "MARQUIS" KENTUCKY BLUEGRASS, 17% "NEWPORT" KENTUCKY BLUEGRASS, 17% "TOUCHDOWN" KENTUCKY BLUEGRASS, 16% "APM PERENNIAL RYEGRASS, 13% "ACCENT PERENNIAL RYEGRASS OR APPROVED EQUAL AT A RATE OF 220 LBS. PER ACRE. FINE LEVEL ALL AREAS PRIOR TO LAYING SEED. ALL LAWN AREAS SHALL BE IRRIGATED WITH 100% COVERAGE BY POP-UP SPRAY HEADS AND GEAR-DRIVEN ROTORS. ALL DECIDUOUS AND CONIFER TREES PLANTED WITHIN SOD AREAS SHALL HAVE A FOUR FOOT(4') DIAMETER TREE RING COVERED WITH SHALL BE CHOCOLATE BROWN BARK FROM DIAMOND TREE BARK, NO SHREDDED FINES. SUBMIT SAMPLES TO BE APPROVED BY LANDSCAPE ARCHITECT AND OWNER BEFORE INSTALLATION.

	REVEGETATED AREA SEE MIX: LP 1.4	2,477 SQ.FT.	LOCATED WHERE SPECIFIED
	1 1/2" SAHARA GRAVEL (DEWITT 5 OZ. WEED BARRIER FABRIC TO BE INSTALLED IN ALL PLANTER AREAS)	7,935 SQ.FT. (73.5 CU.YD)	LOCATED WHERE SPECIFIED

ISSUE DATE	PROJECT NUMBER
09-18-2019	UT19019

NO.	REVISION	DATE
1	XXXX	XX-XX-XX
2		
3		
4		
5		
6		
7		

PLAN INFORMATION

811 BLUE STAKES OF UTAH
UTILITY NOTIFICATION CENTER, INC
1-800-662-4111
www.bluestakes.org

N

0' 10' 20' 40' 80'
GRAPHIC SCALE: 1" = 20'

PROJECT INFORMATION

COYOTE HILLS

ALONG PINNACLE LANE
SARATOGA SPRINGS, UTAH

DEVELOPER / PROPERTY OWNER / CLIENT

Developer / Property Owner:
CLARK COLLEDGE
PH. 801-884-6949
CLARK@CLARKCOLLEDGE.COM

Client / Engineer:
ATLAS ENGINEERING
95 WEST 200 NORTH #2
SPANISH FORK, UT
801-655-0566

LANDSCAPE ARCHITECT / PLANNER

PKJ DESIGN GROUP

PKJ DESIGN GROUP L.L.C.
3450 N. TRIUMPH BLVD. SUITE 102
LEHI, UTAH 84043 (801) 960-2698
www.pkjdesigngroup.com

LICENSE STAMP

REGISTERED LANDSCAPE ARCHITECT
KIRENT ANGBERTH
5128721-5301
09/18/2019
STATE OF UTAH

PM:	JTA
DRAWN:	KBA
CHECKED:	TM
PLOT DATE:	9/18/2019

LANDSCAPE PLAN

PRELIMINARY PLANS NOT FOR CONSTRUCTION

LP-1.1

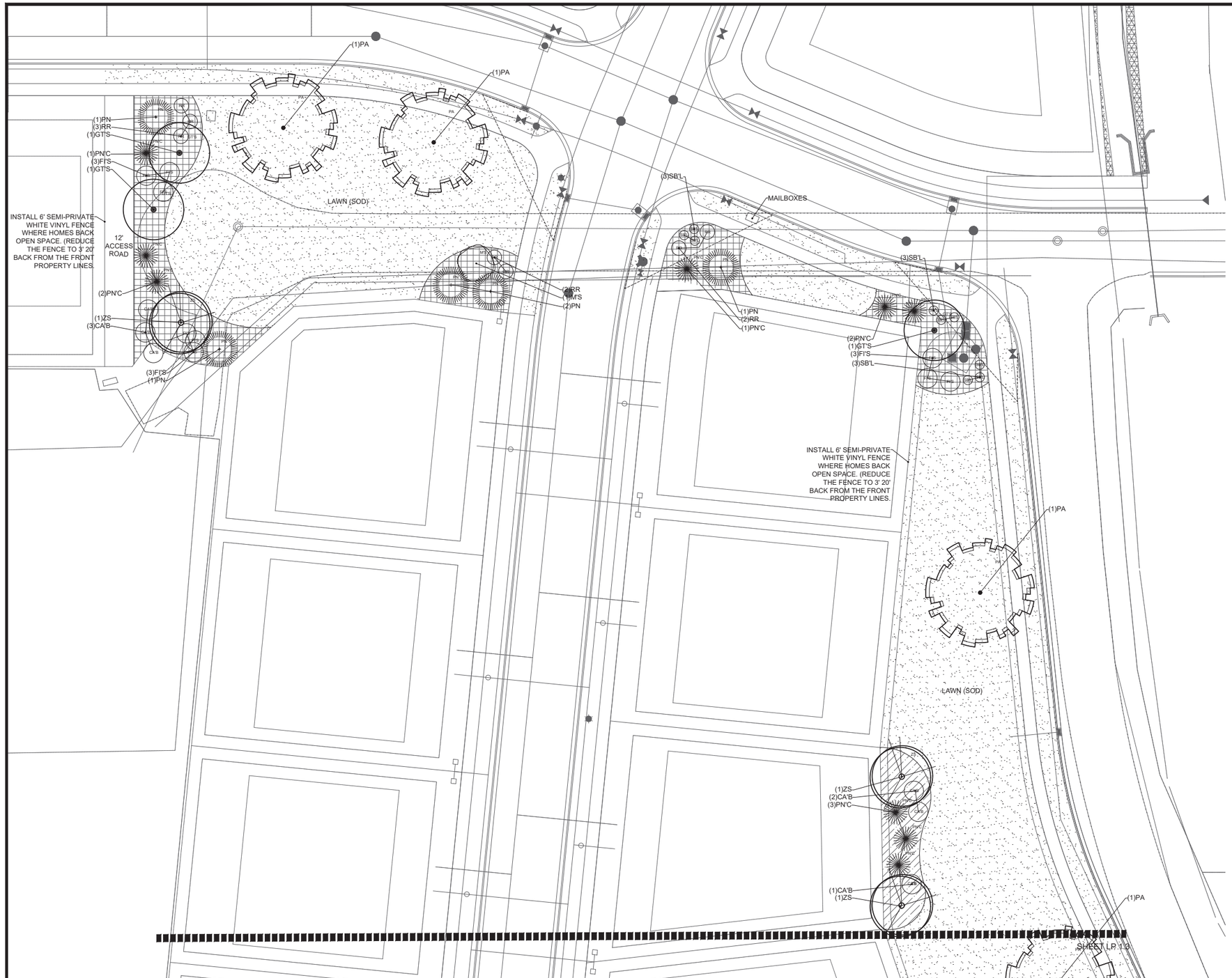

TREE LEGEND (TOTAL PLANT COUNT)

SYMBOL	BOTANICAL NAME	COMMON NAME	QTY.	SIZE	HYDROZONE	SPECIAL NOTES
PN	PINUS NIGRA	AUSTRIAN PINE	8	6'-8' TALL	11.7%	
PN'C	PINUS NIGRA 'COMPACTA'	COMPACT AUSTRIAN BLACK PINE	25	6'-8' TALL	36.8%	
PA	PLATANUS ACERFOLIA	LONDON PLANETREE	10	2" CAL.	14.7%	
GT'S	GLEDITSIA TRIACANTHOS INERMIS 'SKYCOLE'	SKYLINE HONEY LOCUST	10	2" CAL.	14.7%	
ZS	ZELKOVA SERRATA	JAPANESE ZELKOVA	9	2" CAL.	13.2%	
M'S	MALUS X 'SPRING SNOW' CRABAPPLE	SPRING SNOW CRABAPPLE	6	2" CAL.	8.8%	

SHRUB LEGEND

SYMBOL	BOTANICAL NAME	COMMON NAME	QTY.	SIZE	HYDROZONE	SPECIAL NOTES
CA'B	CORNUS ALBA 'BAILHALO'	IVORY HALO DOGWOOD	18	5 GAL	21.2%	
FT'S	FORSYTHIA X INTERMEDIA 'SPRING GLORY'	SPRING GLORY FORSYTHIA	17	5 GAL	20%	
RR	ROSA X WOODSII	WOODS ROSE	26	5 GAL	30.6%	
SB'L	SPIREA BUMALDA 'LIMEMOUND'	LIMEMOUND SPPIREA	24	5 GAL	28.2%	

SITE MATERIALS

SYMBOL	SITE MATERIAL	QUANTITY	SPECIAL NOTES
	3/4" OQUIRRH GRAVEL (DeWitt 5 OZ. WEED BARRIER FABRIC TO BE INSTALLED IN ALL PLANTER AREAS)	19,836 SQ.FT. (183.7 CU.YD)	LOCATED WHERE SPECIFIED
	LAWN (SEED) AREA	78,640 SQ.FT.	

NEW TURF AREAS TO BE SEEDED WITH 18% "BLUESTAR KENTUCKY BLUEGRASS, 19% "MARQUIS" KENTUCKY BLUEGRASS, 17% "NEWPORT" KENTUCKY BLUEGRASS, 17% "TOUCHDOWN" KENTUCKY BLUEGRASS, 16% "APM PERENNIAL RYEGRASS, 13% "ACCENT PERENNIAL RYEGRASS OR APPROVED EQUAL AT A RATE OF 220 LBS. PER ACRE. FINE LEVEL ALL AREAS PRIOR TO LAYING SEED. ALL LAWN AREAS SHALL BE IRRIGATED WITH 100% COVERAGE BY POP-UP SPRAY HEADS AND GEAR-DRIVEN ROTORS. ALL DECIDUOUS AND CONIFER TREES PLANTED WITHIN SOD AREAS SHALL HAVE A FOUR FOOT(4') DIAMETER TREE RING COVERED WITH SHALL BE CHOCOLATE BROWN BARK FROM DIAMOND TREE BARK, NO SHREDDED FINES. SUBMIT SAMPLES TO BE APPROVED BY LANDSCAPE ARCHITECT AND OWNER BEFORE INSTALLATION.

	REVEGETATED AREA SEE MIX: LP 1.4	2,477 SQ.FT.	LOCATED WHERE SPECIFIED
	1 1/2" SAHARA GRAVEL (DEWITT 5 OZ. WEED BARRIER FABRIC TO BE INSTALLED IN ALL PLANTER AREAS)	7,935 SQ.FT. (73.5 CU.YD)	LOCATED WHERE SPECIFIED

ISSUE DATE	PROJECT NUMBER
09-18-2019	UT19019

NO.	REVISION	DATE
1	XXXX	XX-XX-XX
2		
3		
4		
5		
6		
7		

PLAN INFORMATION

811 BLUE STAKES OF UTAH
UTILITY NOTIFICATION CENTER, INC
1-800-662-4111
www.bluestakes.org

N

0' 10' 20' 40' 80'
GRAPHIC SCALE: 1" = 20'

PROJECT INFORMATION

COYOTE HILLS

ALONG PINNACLE LANE
SARATOGA SPRINGS, UTAH

DEVELOPER / PROPERTY OWNER / CLIENT

Developer / Property Owner:
CLARK COLLEDGE
PH. 801-884-6949
CLARK@CLARKCOLLEDGE.COM

Client / Engineer:
ATLAS ENGINEERING
95 WEST 200 NORTH #2
SPANISH FORK, UT
801-655-0566

LANDSCAPE ARCHITECT / PLANNER

PKJ DESIGN GROUP

PKJ DESIGN GROUP L.L.C.
3450 N. TRIUMPH BLVD. SUITE 102
LEHI, UTAH 84043 (801) 960-2698
www.pkjdesigngroup.com

LICENSE STAMP

LICENSED LANDSCAPE ARCHITECT
JEREMY AINSWORTH
09/18/2019
STATE OF UTAH

PM:	JTA
DRAWN:	KBA
CHECKED:	TM
PLOT DATE:	9/18/2019

LANDSCAPE PLAN

PRELIMINARY PLANS NOT FOR CONSTRUCTION

LP-1.2

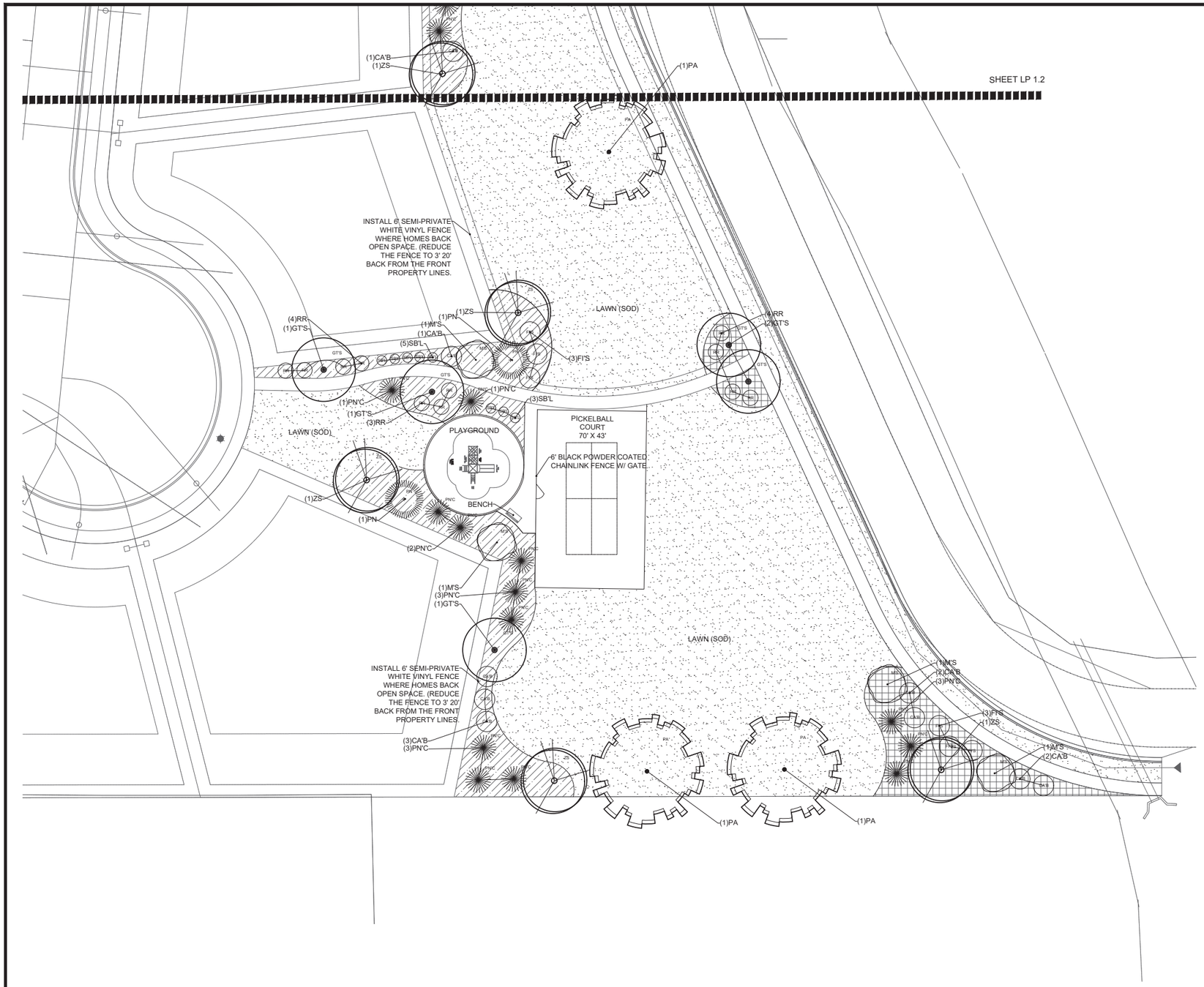

TREE LEGEND (TOTAL PLANT COUNT)

SYMBOL	BOTANICAL NAME	COMMON NAME	QTY.	SIZE	HYDROZONE	SPECIAL NOTES
PN	PINUS NIGRA	AUSTRIAN PINE	8	6'-8' TALL	11.7%	
PN'C	PINUS NIGRA 'COMPACTA'	COMPACT AUSTRIAN BLACK PINE	25	6'-8' TALL	36.8%	
PA	PLATANUS ACERFOLIA	LONDON PLANETREE	10	2" CAL.	14.7%	
GT'S	GLEDITSIA TRIACANTHOS INERMIS 'SKYCOLE'	SKYLINE HONEY LOCUST	10	2" CAL.	14.7%	
ZS	ZELKOVA SERRATA	JAPANESE ZELKOVA	9	2" CAL.	13.2%	
M'S	MALUS X 'SPRING SNOW' CRABAPPLE	SPRING SNOW CRABAPPLE	6	2" CAL.	8.8%	

SHRUB LEGEND

SYMBOL	BOTANICAL NAME	COMMON NAME	QTY.	SIZE	HYDROZONE	SPECIAL NOTES
CA'B	CORNUS ALBA 'BAILHALO'	IVORY HALO DOGWOOD	18	5 GAL	21.2%	
FI'S	FORSYTHIA X INTERMEDIA 'SPRING GLORY'	SPRING GLORY FORSYTHIA	17	5 GAL	20%	
RR	ROSA X WOODSII	WOODS ROSE	26	5 GAL	30.6%	
SB'L	SPIREA BUMALDA 'LIMEMOUND'	LIMEMOUND SPPIREA	24	5 GAL	28.2%	

SITE MATERIALS

SYMBOL	SITE MATERIAL	QUANTITY	SPECIAL NOTES
	3/4" OQUIRRH GRAVEL (DeWitt 5 OZ. WEED BARRIER FABRIC TO BE INSTALLED IN ALL PLANTER AREAS)	19,836 SQ.FT. (183.7 CU.YD)	LOCATED WHERE SPECIFIED
	LAWN (SEED) AREA	78,640 SQ.FT.	

NEW TURF AREAS TO BE SEEDED WITH 18% "BLUESTAR KENTUCKY BLUEGRASS, 19% "MARQUIS" KENTUCKY BLUEGRASS, 17% "NEWPORT" KENTUCKY BLUEGRASS, 17% "TOUCHDOWN" KENTUCKY BLUEGRASS, 16% "APM PERENNIAL RYEGRASS, 13% "ACCENT PERENNIAL RYEGRASS OR APPROVED EQUAL AT A RATE OF 220 LBS. PER ACRE. FINE LEVEL ALL AREAS PRIOR TO LAYING SEED. ALL LAWN AREAS SHALL BE IRRIGATED WITH 100% COVERAGE BY POP-UP SPRAY HEADS AND GEAR-DRIVEN ROTORS. ALL DECIDUOUS AND CONIFER TREES PLANTED WITHIN SOD AREAS SHALL HAVE A FOUR FOOT(4') DIAMETER TREE RING COVERED WITH SHALL BE CHOCOLATE BROWN BARK FROM DIAMOND TREE BARK, NO SHREDDED FINES. SUBMIT SAMPLES TO BE APPROVED BY LANDSCAPE ARCHITECT AND OWNER BEFORE INSTALLATION.

	REVEGETATED AREA SEE MIX: LP 1.4	2,477 SQ.FT.	LOCATED WHERE SPECIFIED
	1 1/2" SAHARA GRAVEL (DEWITT 5 OZ. WEED BARRIER FABRIC TO BE INSTALLED IN ALL PLANTER AREAS)	7,935 SQ.FT. (73.5 CU.YD)	LOCATED WHERE SPECIFIED

ISSUE DATE	PROJECT NUMBER
09-18-2019	UT19019

NO.	REVISION	DATE
1	XXXX	XX-XX-XX
2		
3		
4		
5		
6		
7		

PLAN INFORMATION

811 BLUE STAKES OF UTAH
UTILITY NOTIFICATION CENTER, INC
1-800-662-4111
www.bluestakes.org

N

0' 10' 20' 40' 80'
GRAPHIC SCALE: 1" = 20'

PROJECT INFORMATION

COYOTE HILLS

ALONG PINNACLE LANE
SARATOGA SPRINGS, UTAH

DEVELOPER / PROPERTY OWNER / CLIENT

Developer / Property Owner:
CLARK COLLEDGE
PH. 801-884-6949
CLARK@CLARKCOLLEDGE.COM

Client / Engineer:
ATLAS ENGINEERING
95 WEST 200 NORTH #2
SPANISH FORK, UT
801-655-0566

LANDSCAPE ARCHITECT / PLANNER

PKJ DESIGN GROUP

PKJ DESIGN GROUP L.L.C.
3450 N. TRIUMPH BLVD. SUITE 102
LEHI, UTAH 84043 (801) 960-2698
www.pkjdesigngroup.com

LICENSE STAMP

REGISTERED LANDSCAPE ARCHITECT
KRIEMI ANGBETH
09/18/2019
STATE OF UTAH

PM:	JTA
DRAWN:	KBA
CHECKED:	TM
PLOT DATE:	9/18/2019

LANDSCAPE PLAN

PRELIMINARY PLANS NOT FOR CONSTRUCTION

LP-1.3

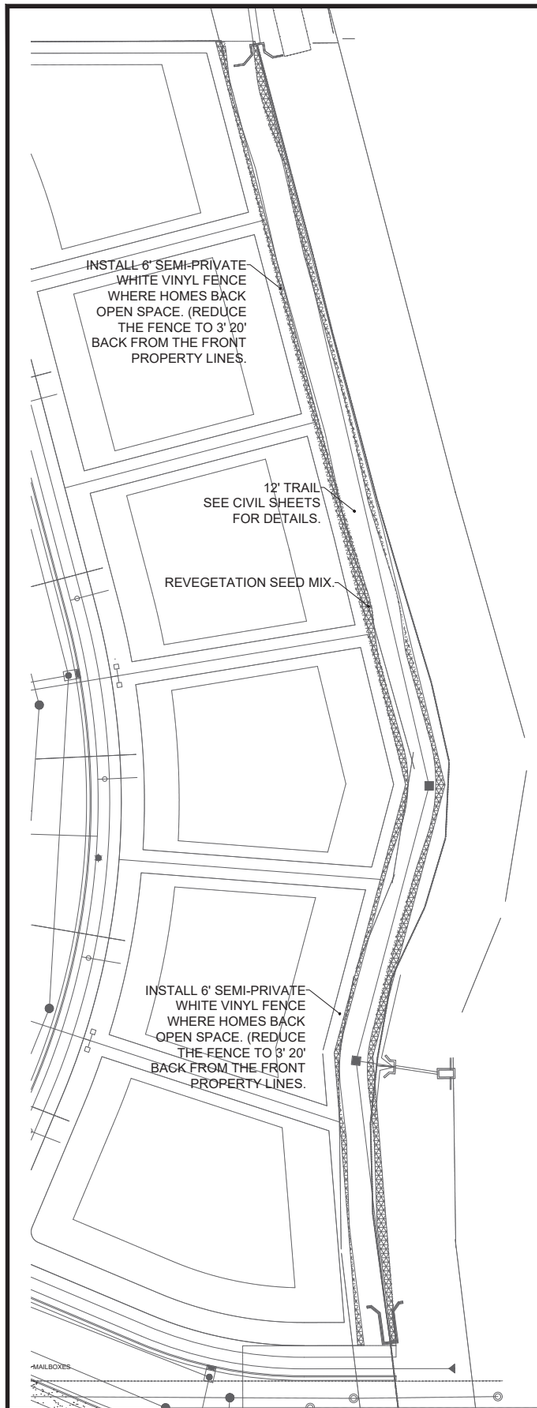

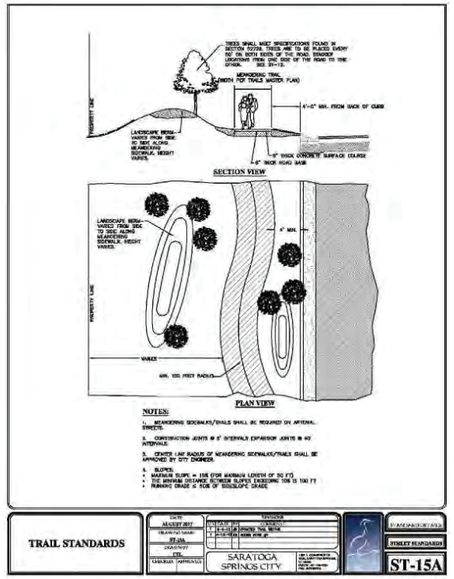

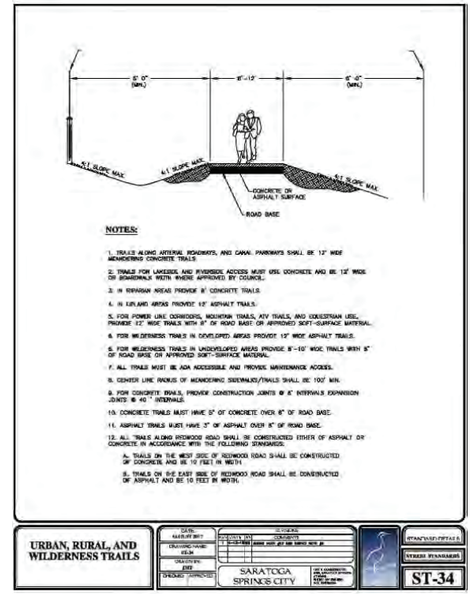

SITE MATERIALS

SYMBOL	SITE MATERIAL	QUANTITY	SPECIAL NOTES
	REVEGETATED AREA SEE MIX BELOW	2,477 SQ.FT.	LOCATED WHERE SPECIFIED

NATIVE REVEGETATION SEED MIX - NON- IRRIGATED

NAME	VARIETY	SCIENTIFIC NAME	BULK LBS.	BULK%	PLS LBS.	PLS%	PLS/ACRE

Native Grass Mix. Native grass seed shall be fresh, clean, new crop seed; mechanically premixed to the specified proportions. Native grass seed shall be a blend of the following seeds:

TYPE 2: Grass Mix (Tall)
PLANTING RATE
PERCENTAGE
Quick Guard (Sterile tricale hybrid) 21.74%
CrestedWheatgrass (Agropyron cristatum) 15.21%
SlenderWheatgrass (Agropyron trachcaulum) 19.57%
BluebunchWheatgrass (Agropyron spicatum) 13.04%
IntermediateWheatgrass (Agropyron intermedium) 13.05%
Green Needlegrass (Stipa virdula) 5.43%
WesternWheatgrass (Agropyron smithii) 5.44%
Sheep Fescue (Fesctuca Ovina) 3.48%
Sandberg Bluegrass (Poa sandbergii) 2.61%
Sand Dropseed (Sporobolus Crytandrus) 0.43%
Totals 100.00%

Remove all invasive weeds and vegetation on entire property prior to acceptance by City

A. Seeding.
1. Off-Site Restoration. All off-site work through areas that are covered with native grasses shall be reseeded with native grass seed, as required, as described herein.
B. Seeding shall not be performed when the wind velocity exceeds 5 miles per hour, or is determined detrimental to the uniform distribution of seed.
C. Till areas to be planted to a depth of not less than 4-inches prior to seeding.
D. Grade planting areas smooth, even surface with a loose, uniformly fine texture. Roll and rake and remove ridges and fill in depressions as required.
E. Moisten prepared seeding area by sprinkling to a depth of six inches before planting; the area shall be surface dry at the time of application. Do not create a muddy soil condition.
F. Seed shall be applied by hydraulic method with a hydro-seeder at the coverage rate recommended by the seed vendor. Seed may be applied by broadcast or drilled method at the recommended coverage by the seed vendor.
G. Rate of Application.Native Grass seed mix shall be applied at a supplier acceptable rate to obtain 70% growth and acceptance at end of warranty period.

ISSUE DATE: 09-18-2019
PROJECT NUMBER: UT19019

NO.	REVISION	DATE
1	XXXX	XX-XX-XX
2		
3		
4		
5		
6		
7		

PLAN INFORMATION

811 BLUE STAKES OF UTAH
UTILITY NOTIFICATION CENTER, INC
1-800-662-4111
www.bluestakes.org

N

0' 15' 30' 60' 120'
GRAPHIC SCALE: 1" = 30'

PROJECT INFORMATION

COYOTE HILLS

ALONG PINNACLE LANE
SARATOGA SPRINGS, UTAH

DEVELOPER / PROPERTY OWNER / CLIENT

Developer / Property Owner:
CLARK COLLEDGE
PH. 801-884-6949
CLARK@CLARKCOLLEDGE.COM

Client / Engineer:
ATLAS ENGINEERING
95 WEST 200 NORTH #2
SPANISH FORK, UT
801-655-0566

LANDSCAPE ARCHITECT / PLANNER

PKJ DESIGN GROUP

PKJ DESIGN GROUP L.L.C.
3450 N. TRIUMPH BLVD. SUITE 102
LEHI, UTAH 84043 (801) 960-2698
www.pkjdesigngroup.com

LICENSE STAMP

REGISTERED LANDSCAPE ARCHITECT
KERMIT NACHGETH
09/18/2019
STATE OF UTAH

PM: JTA
DRAWN: KBA
CHECKED: TM
PLOT DATE: 9/18/2019

LANDSCAPE PLAN

PRELIMINARY PLANS NOT FOR CONSTRUCTION

LP-1.4

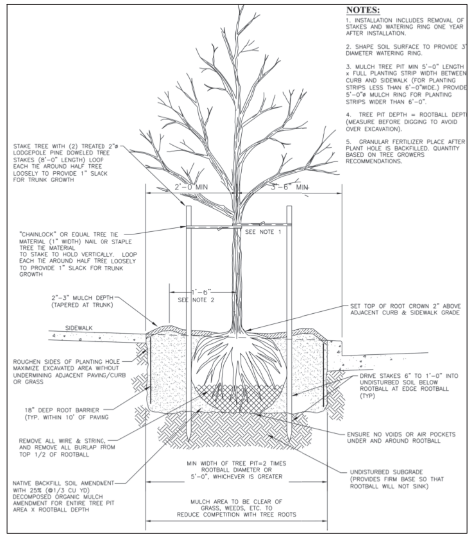

A — DECIDUOUS TREE PLANTING DETAIL
NOT TO SCALE
PKJ DESIGN GROUP

NOTES:
1- TREES SHALL BE OF QUALITY PRESCRIBED IN CROWN OBSERVATIONS AND ROOT OBSERVATIONS DETAILS AND SPECIFICATIONS.
2- SEE SPECIFICATIONS FOR FURTHER REQUIREMENTS RELATED TO THIS DETAIL.

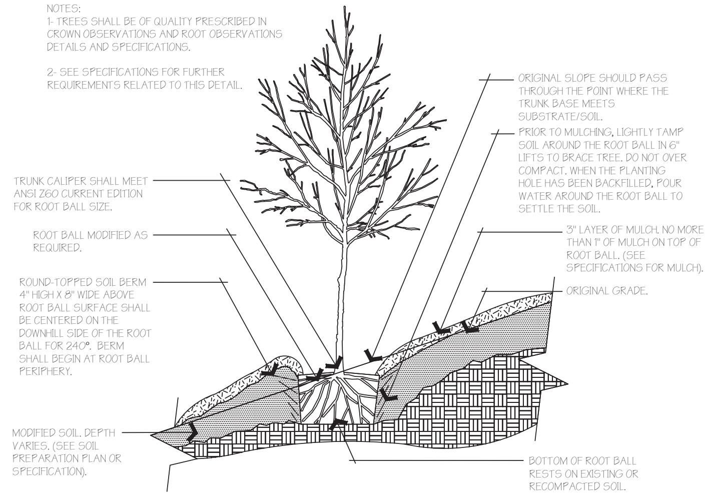

B — TREE ON SLOPE 5% (20:1) TO 50% (2:1)
NOT TO SCALE
PKJ DESIGN GROUP

NOTES:
1. PLANT SO THAT THE TOP OF THE ROOT BALL IS EVEN WITH THE FINISHED GRADE.
2. BACKFILL MIX: 1/2 SANDY LOAM TOPSOIL + 1/4 ORGANIC MULCH, & 1/4 NATIVE SOILS.
3. DO NOT DAMAGE MAIN ROOTS OR DESTROY ROOT BALL WHEN INSTALLING TREE STAKES.
4. WATER THOROUGHLY AFTER INSTALLATION.
5. STAKING IS REQUIRED: LOOSEN TREE STAKES AFTER FIRST GROWING SEASON AND REMOVE TREE STAKES AFTER SECOND GROWING SEASON.
6. OVER EXCAVATE PITS TO 3' DEPTH AND INSTALL ADDITIONAL COMPACTED TOPSOIL UNDER TREE.
7. PULL COBBLE ROCK A MINIMUM OF 6" AWAY FROM TRUNK OF TREE.
8. LEAVE PLANT I.D. TAGS ON THE TREES UNTIL ACCEPTANCE BY THE OWNER. AFTER FINAL ACCEPTANCE, REMOVE I.D. TAGS.

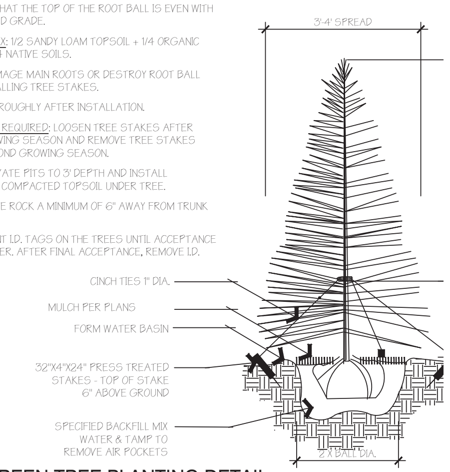

C — EVERGREEN TREE PLANTING DETAIL
NOT TO SCALE
PKJ DESIGN GROUP

D — PLAYGROUND: 176125-DESIGN 30
NOT TO SCALE
PKJ DESIGN GROUP

NOTES:
1. IF PLANT IS BALL & BURLAP, CUT AND REMOVE TOP 1/3 OF BURLAP FROM ROOT BALL.
2. IF PLANT IS CONTAINERIZED, SCARIFY ROOT BALL PRIOR TO PLANTING.
3. BACKFILL MIX: 1/2 SANDY LOAM + 1/4 ORGANIC MULCH + 1/4 NATIVE SOILS IF NATIVE SOILS ARE SUITABLE.
4. DO NOT DAMAGE MAIN ROOTS OR DESTROY ROOT BALL WHEN INSTALLING TREE STAKES.
5. WATER THOROUGHLY AFTER INSTALLATION.
8. LEAVE PLANT I.D. TAGS ON THE TREES UNTIL ACCEPTANCE BY THE OWNER. AFTER FINAL ACCEPTANCE, REMOVE I.D. TAGS.

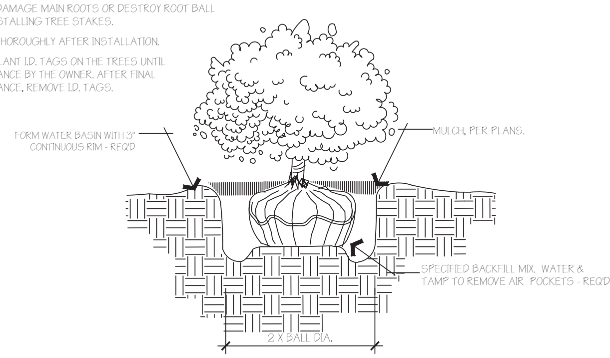

E — SHRUB PLANTING DETAIL
NOT TO SCALE
PKJ DESIGN GROUP

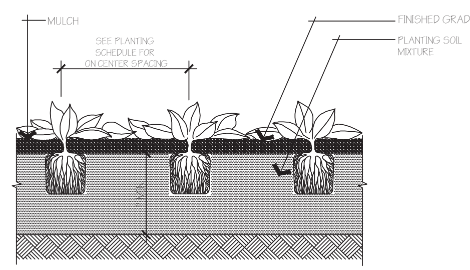

F — PERENNIAL PLANTING
NOT TO SCALE
PKJ DESIGN GROUP

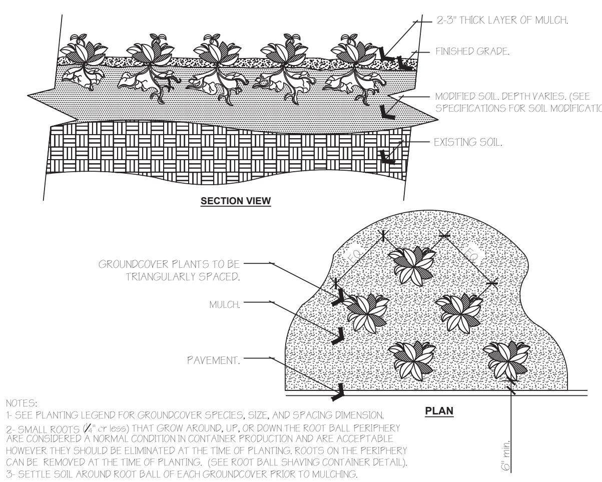

NOTES:
1- SEE PLANTING LEGEND FOR GROUNDCOVER SPECIES, SIZE, AND SPACING DIMENSION.
2- SMALL ROOTS (¼" or less) THAT GROW AROUND, UP, OR DOWN THE ROOT BALL PERIPHERY ARE CONSIDERED A NORMAL CONDITION IN CONTAINER PRODUCTION AND ARE ACCEPTABLE HOWEVER THEY SHOULD BE ELIMINATED AT THE TIME OF PLANTING. ROOTS ON THE PERIPHERY CAN BE REMOVED AT THE TIME OF PLANTING. (SEE ROOT BALL SHAVING CONTAINER DETAIL).
3- SETTLE SOIL AROUND ROOT BALL OF EACH GROUNDCOVER PRIOR TO MULCHING.

G — GROUNDCOVER
NOT TO SCALE
PKJ DESIGN GROUP

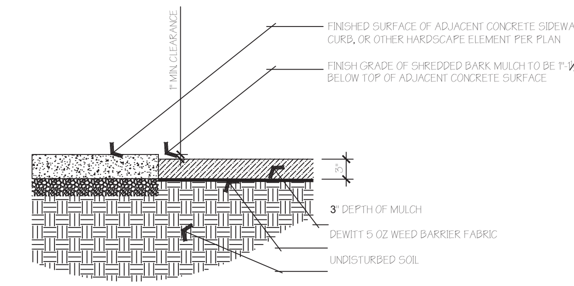

H — MULCH DETAIL
NOT TO SCALE
PKJ DESIGN GROUP

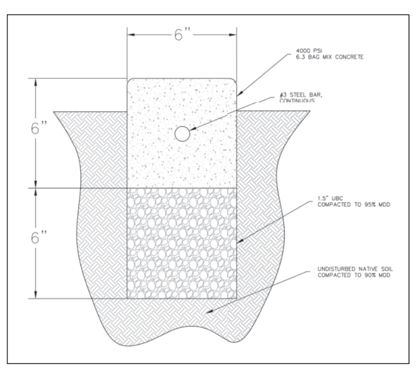

I — CONCRETE MOWCURB DETAIL
NOT TO SCALE
PKJ DESIGN GROUP

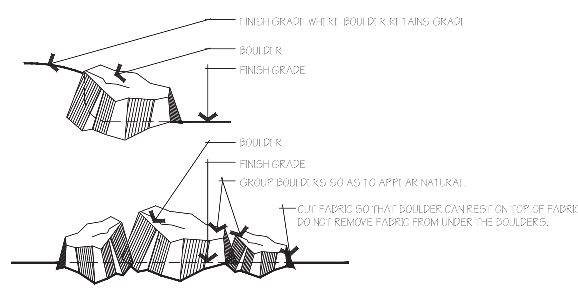

NOTE:
PLACE ALL BOULDERS SUCH THAT 1/4 OF THE TOTAL MASS OF EACH BOULDER IS BELOW FINISH GRADE.

J — BOULDER PLACEMENT DETAIL
NOT TO SCALE
PKJ DESIGN GROUP

NOTES:
1. KEEP TOP OF COBBLE ROCK ½" BELOW ADJACENT WALKS AND CURBS. DO NOT ALLOW COBBLE ROCK TO TOUCH THE TRUNK OF ANY PLANT. INSTALL COBBLE ROCK AFTER INSTALLATION OF WEED BARRIER FABRIC AND PLANT MATERIAL.
2. CONTRACTOR TO ENSURE THAT TOP OF WEED BARRIER FABRIC IS FREE OF SOILS AND DEBRIS PRIOR TO PLACING COBBLE ROCK.
3. SEE LANDSCAPE PLANS FOR ROCK TYPE AND DEPTH.
4. COBBLE ROCK TO BE SCREENED AND WASHED PRIOR TO INSTALLATION.

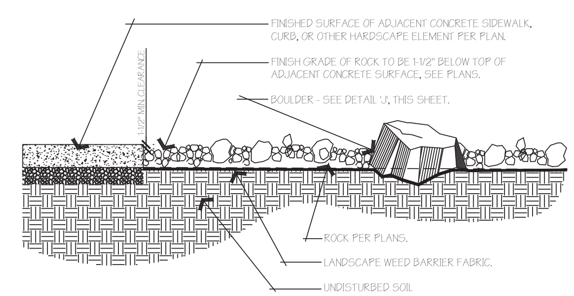

K — COBBLE ROCK AND WEED BARRIER DETAIL
NOT TO SCALE
PKJ DESIGN GROUP

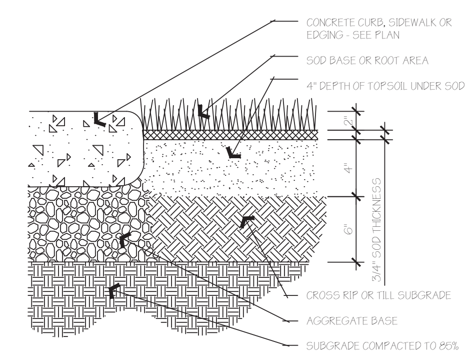

NOTES:
1. ENSURE FINISH GRADE IS 1"- 2" BELOW TOP OF CURB, WALK, OR EDGING.
2. TURF IS THE MOST HEALTHY AND WATER EFFICIENT WHEN MOWED AT A MIN. HEIGHT OF 2" - 2½".

L — SOD LAYING DETAIL
NOT TO SCALE
PKJ DESIGN GROUP

ISSUE DATE	PROJECT NUMBER
09-18-2019	UT19019

NO.	REVISION	DATE
1	XXXX	XX-XX-XX
2		
3		
4		
5		
6		
7		

PLAN INFORMATION
811 BLUE STAKES OF UTAH
UTILITY NOTIFICATION CENTER, INC
1-800-662-4111
www.bluestakes.org

PROJECT INFORMATION
COYOTE HILLS
ALONG PINNACLE LANE
SARATOGA SPRINGS, UTAH

DEVELOPER / PROPERTY OWNER / CLIENT
Developer / Property Owner:
CLARK COLLEDGE
PH. 801-884-6949
CLARK@CLARKCOLLEDGE.COM

Client / Engineer:
ATLAS ENGINEERING
95 WEST 200 NORTH #2
SPANISH FORK, UT
801-655-0566

LANDSCAPE ARCHITECT / PLANNER
PKJ DESIGN GROUP
PKJ DESIGN GROUP L.L.C.
3450 N. TRIUMPH BLVD. SUITE 102
LEHI, UTAH 84043 (801) 960-2698
www.pkjdesigngroup.com

LICENSE STAMP
LICENSED LANDSCAPE ARCHITECT
JEREMY AINSWORTH
8128121-5301
09/18/2019
ELECTRONIC SEAL
STATE OF UTAH

PM:	JTA
DRAWN:	KBA
CHECKED:	TM
PLOT DATE:	9/18/2019

LANDSCAPE PLAN
PRELIMINARY PLANS NOT FOR CONSTRUCTION
LP-2.5

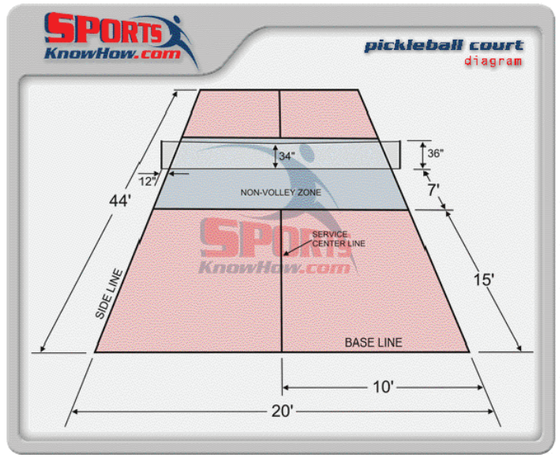

M PICKELBALL DIMENSIONS
NOT TO SCALE
PKJ DESIGN GROUP

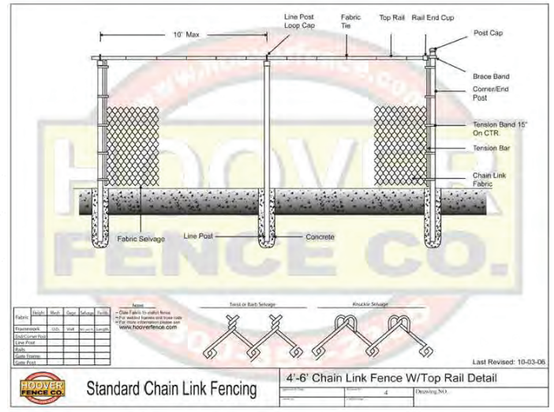

N PICKELBALL BLACK POWDER COATED 6' CHAIN LINK FENCE
NOT TO SCALE
PKJ DESIGN GROUP

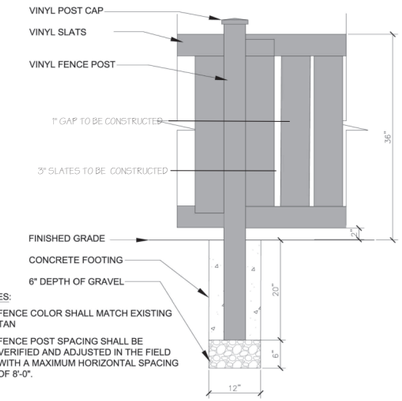

NOTES:
1. FENCE COLOR SHALL MATCH EXISTING TAN
2. FENCE POST SPACING SHALL BE VERIFIED AND ADJUSTED IN THE FIELD WITH A MAXIMUM HORIZONTAL SPACING OF 8'-0".

O 3' 2-RAIL SEMI-PRIVATE FENCE DETAIL
NOT TO SCALE
PKJ DESIGN GROUP

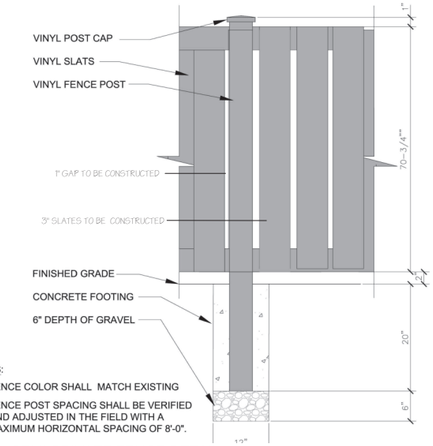

NOTES:
1. FENCE COLOR SHALL MATCH EXISTING
2. FENCE POST SPACING SHALL BE VERIFIED AND ADJUSTED IN THE FIELD WITH A MAXIMUM HORIZONTAL SPACING OF 8'-0".

P 6' SEMI-PRIVATE FENCE DETAIL
NOT TO SCALE
PKJ DESIGN GROUP

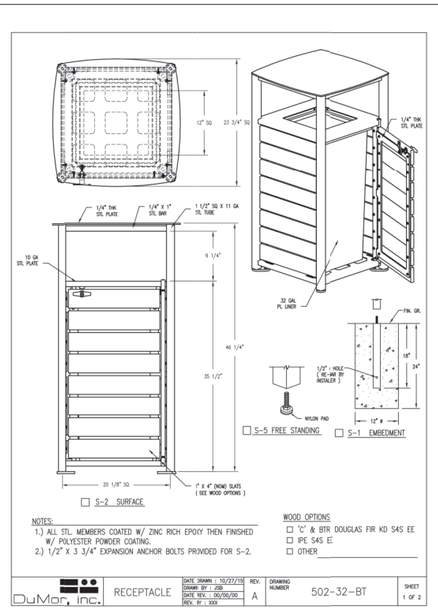

NOTES:
1.) ALL STL. MEMBERS COATED W/ ZINC RICH EPOIY THEN FINISHED W/ POLYESTER POWDER COATING.
2.) 1/2" X 3 3/4" EXPANSION ANCHOR BOLTS PRVIDED FOR S-2.

WOOD OPTIONS
☐ 'C' & BTR DOUGLAS FIR KD S4S EE
☐ IPE S4S E
☐ OTHER _____

DuMor, Inc. | RECEPTACLE | DATE DRAWN : 10/27/15 | DRAWN BY : JSB | DATE REV. : 00/00/00 | REV. BY : XXX | REV. A | DRAWING NUMBER 502-32-BT | SHEET 1 OF 2

Q TRASH RECEPTACLE
NOT TO SCALE
PKJ DESIGN GROUP

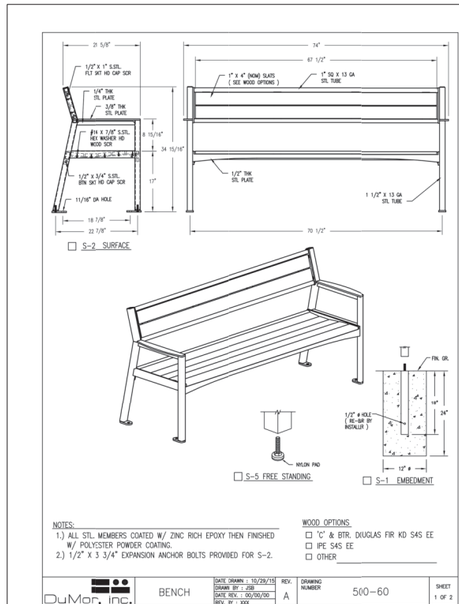

NOTES:
1.) ALL STL. MEMBERS COATED W/ ZINC RICH EPOXY THEN FINISHED W/ POLYESTER POWDER COATING.
2.) 1/2" X 3 3/4" EXPANSION ANCHOR BOLTS PROVIDED FOR S-2.

WOOD OPTIONS
☐ 'C' & BTR. DOUGLAS FIR KD S4S EE
☐ IPE S4S EE
☐ OTHER _____

DuMor, Inc. | BENCH | DATE DRAWN : 10/29/15 | DRAWN BY : JSB | DATE REV. : 00/00/00 | REV. BY : XXX | REV. A | DRAWING NUMBER 500-60 | SHEET 1 OF 2

R BENCH
NOT TO SCALE
PKJ DESIGN GROUP

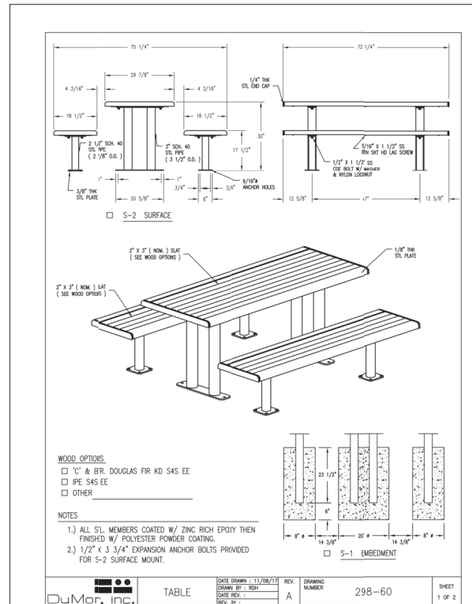

WOOD OPTIOIS.
☐ 'C' & BTR. DOUGLAS FIR KD S4S EE
☐ IPE S4S EE
☐ OTHER _____

NOTES
1.) ALL STL. MEMBERS COATED W/ ZINC RICH EPOIY THEN FINISHED W/ POLYESTER POWDER COATING.
2.) 1/2" x 3 3/4" EXPANSION ANCHOR BOLTS PROVIDED FOR S-2 SURFACE MOUNT.

DuMor, Inc. | TABLE | DATE DRAWN : 11/08/17 | DRAWN BY : RDH | DATE REV. : | REV. BY : | REV. A | DRAWING NUMBER 298-60 | SHEET 1 OF 2

S PICNIC TABLE
NOT TO SCALE
PKJ DESIGN GROUP

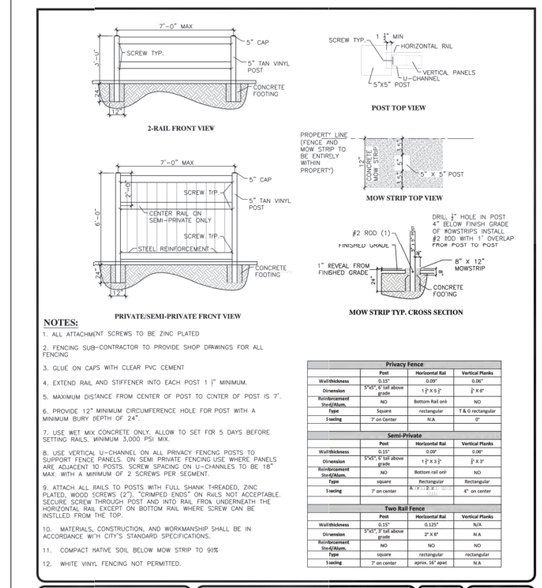

NOTES:
1. ALL ATTACHMENT SCREWS TO BE ZINC PLATED
2. FENCING SUB-CONTRACTOR TO PROVIDE SHOP DRAWINGS FOR ALL FENCING
3. GLUE ON CAPS WITH CLEAR PVC CEMENT
4. EXTEND RAIL AND STIFFENER INTO EACH POST 1 1" MINIMUM.
5. MAXIMUM DISTANCE FROM CENTER OF POST TO CNTER OF POST IS 7'.
6. PROVIDE 12" MINIMUM CIRCUMFERENCE HOLE FOR POST WITH A MINIMUM BURY DEPTH OF 24".
7. USE WET MIX CONCRETE ONLY. ALLOW TO SET FOR 5 DAYS BEFORE SETTING RAILS. MINIMUM 3,000 PSI MIX.
8. USE VERTICAL U-CHANNEL ON ALL PRIVACY FENCING POSTS TO SUPPORT FENCE PANELS. ON SEMI PRIVATE FENCING USE WHERE PANELS ARE ADJACENT TO POSTS. SCREW SPACING ON U-CHANNLES TO BE 18" MAX. WITH A MINIMUM OF 2 SCREWS PER SEGMENT.
9. ATTACH ALL RAILS TO POSTS WITH FULL SHANK T-READED, ZINC PLATED, WOOD SCREWS (2"). "CRIMPED ENDS" ON RAILS NOT ACCEPTABLE. SECURE SCREW THROUGH POST AND INTO RAIL FROA UNDERNEATH THE HORIZONTAL RAIL EXCEPT ON BOTTOM RAIL WHERE SCREW CAN BE INSTLLED FROM THE TOP.
10. MATERIALS, CONSTRUCTION, AND WORKMANSHIP SHALL BE IN ACCORDANCE WITH CITY'S STANDARD SPECIFICATIONS.
11. COMPACT NATIVE SOIL BELOW MOW STRIP TO 95%
12. WHITE VINYL FENCING NOT PERMITTED.

Privacy Fence			
	Post	Horizontal Rail	Vertical Planks
Wallthickness	0.125"	0.09"	0.06"
Dimension	5"x5",2" tall above grade	1-2" x 4-2"	2" x 4"
Reinforcement Yes-Ø/Num.	NO	Bottom Rail only	NO
Type	Square	rectangular	T & G rectangular
Seeding	7' on Center	N.A.	7"

Semi-Private			
	Post	Horizontal Rail	Vertical Planks
Wallthickness	0.125"	0.09"	0.06"
Dimension	5"x5",2" tall above grade	1-2" x 4-2"	2" x 4"
Reinforcement Yes-Ø/Num.	NO	Bottom-rail only	NO
Type	square	Rectangular	Rectangular
Seeding	7' on center	N/A	4" on center

Two Rail Fence			
	Post	Horizontal Rail	Vertical Planks
Wallthickness	0.125"	0.125"	N/A
Dimension	5"x5",2' tall above grade	2" X 6"	N.A.
Reinforcement Yes-Ø/Num.	NO	NO	NO
Type	square	rectangular	rectangular
Seeding	7' on center	aprox. 16" apart	N.A.

VINYL FENCE WITH MOW STRIP

DATE JANUARY 2015 | DRAWING NAME LS-14 | DRAWN BY: ETL | CHECKED | APPROVED
REVISIONS: NO. | DATE | BY | DESCRIPTION
SARATOGA SPRINGS CITY
CITY'S COMMENCE ON STANDARDS FOR DRAWING SET ON PAGE 1 PLEASE SEE PAGE 2 FOR DETAILS
STANDARD DETAILS
LANDSCAPING
LS-14

T VINYL FENCE WITH MOW STRIP
NOT TO SCALE
PKJ DESIGN GROUP

ISSUE DATE	PROJECT NUMBER
09-18-2019	UT19019

NO.	REVISION	DATE
1	XXXX	XX-XX-XX
2		
3		
4		
5		
6		
7		

PLAN INFORMATION

811 BLUE STAKES OF UTAH
UTILITY NOTIFICATION CENTER, INC
1-800-662-4111
www.bluestakes.org

PROJECT INFORMATION

COYOTE HILLS
ALONG PINNACLE LANE
SARATOGA SPRINGS, UTAH

DEVELOPER / PROPERTY OWNER / CLIENT

Developer / Property Owner:
CLARK COLLEDGE
PH. 801-884-6949
CLARK@CLARKCOLLEDGE.COM

Client / Engineer:
ATLAS ENGINEERING
95 WEST 200 NORTH #2
SPANISH FORK, UT
801-655-0566

LANDSCAPE ARCHITECT / PLANNER

PKJ DESIGN GROUP
PKJ DESIGN GROUP L.L.C.
3450 N. TRIUMPH BLVD. SUITE 102
LEHI, UTAH 84043 (801) 960-2698
www.pkjdesigngroup.com

LICENSE STAMP

REGISTERED LANDSCAPE ARCHITECT
ARNOLD ANDMORTH
13288211-5301
09/18/2019
STATE OF UTAH

PM:	JTA
DRAWN:	KBA
CHECKED:	TM
PLOT DATE:	9/18/2019

LANDSCAPE PLAN

PRELIMINARY PLANS NOT FOR CONSTRUCTION

LP-2.6