SIERRA ESTATES PLAT "D"

LOCATED IN THE NORTHEAST QUARTER OF SECTION 22,
TOWNSHIP 5 SOUTH, RANGE I WEST, SALT LAKE BASE AND MERIDIAN
SARATOGA SPRINGS CITY, UTAH COUNTY, UTAH

DATA TABLE	
TOTAL LOTS:	14
ZONE:	R-3
TOTAL DEVELOPMENT:	4.69 ACRES
PUBLIC ROAD DEDICATION:	1.58 ACRES (34%)
TOTAL LOT AREA:	3.11 ACRES (66%)
DENSITY:	4.50 DU/ACRE
TOTAL IMPERVIOUS AREA:	0.45 ACRES
TOTAL LANDSCAPE AREA:	2,177 SQ. FT.

CURVE TABLE

CURVE	RADIUS	LENGTH	DELTA	CHORD	BEARING
C1	200.00	15.19	04°21'08"	15.19	S 87°48'53" W
C2	200.00	14.83	04°14'58"	14.83	S 87°45'48" W
C3	200.00	15.06	04°18'48"	15.05	N 02°12'17" W
C4	200.00	53.40	15°17'58"	53.25	N 07°36'06" E
C5	200.00	53.40	15°17'58"	53.25	N 82°23'54" W
C6	200.00	53.63	15°21'48"	53.47	N 82°25'49" W
C7	172.00	13.07	04°21'08"	13.06	S 87°48'53" W
C8	228.00	16.91	04°14'58"	16.91	S 87°45'48" W
C9	172.00	12.76	04°14'58"	12.75	S 87°45'48" W
C10	15.00	23.56	90°00'00"	21.21	S 40°38'19" W
C11	15.00	23.56	90°00'00"	21.21	S 49°21'41" E
C12	228.00	17.32	04°21'08"	17.31	S 87°48'53" W
C13	15.00	22.45	85°45'02"	20.41	N 47°14'12" W
C14	15.00	24.67	94°14'58"	21.99	N 42°45'48" E
C15	228.00	17.16	04°18'48"	17.16	N 02°12'17" W
C16	172.00	12.95	04°18'48"	12.95	N 02°12'17" W
C17	172.00	42.63	14°12'03"	42.52	N 07°03'09" E
C18	15.00	23.85	91°05'54"	21.42	N 59°42'07" E
C19	228.00	60.88	15°17'58"	60.70	N 82°23'54" W
C20	228.00	58.06	14°35'23"	57.90	S 07°14'48" W
C21	15.00	23.38	89°17'25"	21.08	N 30°06'13" W
C22	172.00	46.12	15°21'48"	45.98	N 82°25'49" W
C23	228.00	61.14	15°21'48"	60.95	N 82°25'49" W
C24	172.00	45.93	15°17'58"	45.79	N 82°23'54" W
C25	55.00	283.73	295°34'29"	58.64	N 17°21'37" W

NOTES:

1. PLAT MUST BE RECORDED WITHIN 24 MONTHS OF FINAL PLAT APPROVAL BY CITY COUNCIL. FINAL PLAT APPROVAL WAS GRANTED ON THE _____ DAY OF _________, 20____.
2. THE INSTALLATION OF ALL IMPROVEMENTS SHALL CONFORM TO ALL CITY RULES, ORDINANCES, REQUIREMENTS, STANDARDS, AND POLICIES REGARDING THE DEVELOPMENT OF THIS PROPERTY.
3. PRIOR TO BUILDING PERMITS BEING ISSUED, SOIL TESTING STUDIES MAY BE REQUIRED ON EACH LOT AS DETERMINED BY THE CITY BUILDING OFFICIAL.
4. PLAT MAY BE SUBJECT TO THE MASTER DEVELOPMENT AGREEMENT, DEVELOPER AGREEMENT, SUBDIVISION AGREEMENT, OR SITE PLAN AGREEMENT, SEE CITY RECORDER FOR MORE INFORMATION.
5. BUILDING PERMITS WILL NOT BE ISSUED UNTIL ALL IMPROVEMENTS HAVE BEEN INSTALLED AND ACCEPTED BY THE CITY IN WRITING. ALL IMPROVEMENTS CURRENTLY MEET CITY STANDARDS; AND BONDS ARE POSTED BY THE CURRENT OWNER OF THE PROJECT PURSUANT TO CITY CODE.
6. ALL BONDS AND BOND AGREEMENTS ARE BETWEEN THE CITY, DEVELOPER/OWNER, AND FINANCIAL INSTITUTION. NO OTHER PARTY, INCLUDING UNIT OR LOT OWNERS, SHALL BE DEEMED A THIRD-PARTY BENEFICIARY OR HAVE ANY RIGHTS INCLUDING THE RIGHT TO BRING ANY ACTION UNDER ANY BOND OR BOND AGREEMENT.
7. THE OWNER OF THIS SUBDIVISION AND ANY SUCCESSORS AND ASSIGNS ARE RESPONSIBLE FOR ENSURING THAT IMPACT AND CONNECTION FEES ARE PAID AND WATER RIGHTS ARE SECURED FOR EACH INDIVISUAL LOT. NO BUILDING PERMITS SHALL BE ISSUED FOR ANY LOT IN THIS SUBDIVISION UNTIL ALL IMPACT AND CONNECTION FEES, AT THE RATES IN EFFECT WHEN APPLYING FOR BUILDING PERMIT, ARE PAID IN FULL AND WATER RIGHTS SECURED AS SPECIFIED BY CURRENT CITY ORDINANCES AND FEE SCHEDULES.
8. ALL PUBLIC OPEN SPACE AND PUBLIC TRAIL IMPROVEMENTS LOCATED HEREIN ARE TO BE INSTALLED BY OWNER, DEDICATED TO THE CITY AND MAINTAINED BY THE CITY.
9. ANY REFERENCE HEREIN TO OWNERS, DEVELOPERS, OR CONTRACTORS SHALL APPLY TO SUCCESSORS, AGENTS, AND ASSIGNS.
10. LOTS/UNITS ARE SUBJECT TO ASSOCIATION BYLAWS, ARTICLES OF INCORPORATIONS AND CC&R'S

BY SIGNING THIS PLAT THE FOLLOWING UTILITY COMPANIES ARE APPROVING THE (A) BOUNDARY, COURSE, DIMENSIONS, AND INTENDED USE OF THE RIGHT-OF-WAY AND EASEMENT GRANTS OF RECORD. (B) LOCATION OF EXISTING UNDERGROUND AND UTILITY FACILITIES. (C) CONDITIONS OR RESTRICTIONS GOVERNING THE LOCATION OF THE FACILITIES WITH THE RIGHT-OF-WAY, AND EASEMENT GRANTS OF RECORD, AND UTILITY FACILITIES WITHIN THE SUBDIVISION. "APPROVING" SHALL HAVE THE MEANING IN UTAH CODE SECTION 10-9A-603 (4)(c)(ii).

LEGEND:

- FOUND SECTION CORNER MONUMENT
- EXISTING SUBDIVISION SURVEY MONUMENT
- PROPOSED SUBDIVISION SURVEY MONUMENT
- EXISTING FIRE HYDRANT
- PROPOSED FIRE HYDRANT
- EXISTING STREET LIGHT
- PROPOSED STREET LIGHT

VICINITY SKETCH

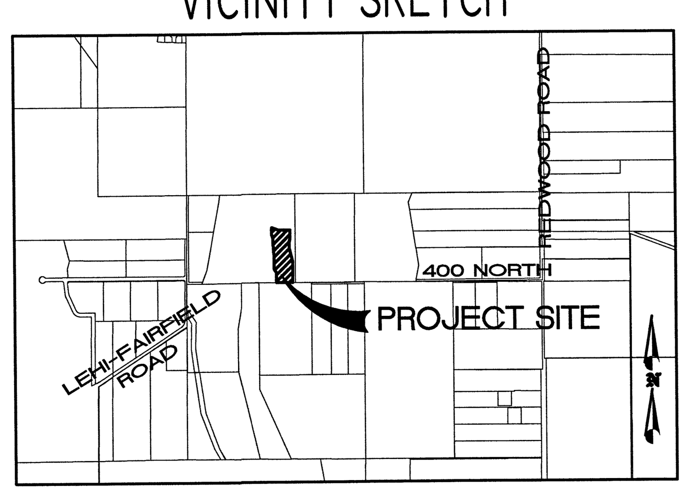

TYPICAL SETBACK & P.U.E. DETAILS

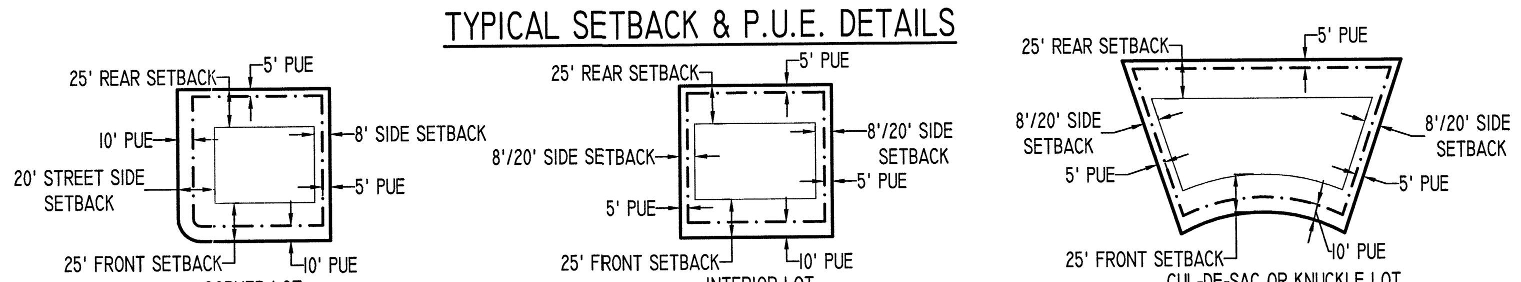

QUESTAR GAS COMPANY

APPROVED THIS _____ DAY OF ___________ A.D. 20___,

QUESTAR GAS COMPANY

ROCKY MOUNTAIN POWER

APPROVED THIS _____ DAY OF ___________ A.D. 20___,

ROCKY MOUNTAIN POWER

COMCAST CABLE TELEVISION

APPROVED THIS _____ DAY OF ___________ A.D. 20___,

COMCAST CABLE TELEVISION

CENTURY LINK

APPROVED THIS _____ DAY OF ___________ A.D. 20___,

CENTURY LINK

SURVEYOR'S CERTIFICATE

I, _____________, DO HEREBY CERTIFY THAT I AM A REGISTERED LAND SURVEYOR AND THAT I HOLD A LICENSE, CERTIFICATE NO. , IN ACCORDANCE WITH THE PROFESSIONAL ENGINEERS AND LAND SURVEYORS LICENSING ACT FOUND IN TITLE 58, CHAPTER 22 OF THE UTAH CODE. I FURTHER CERTIFY THAT BY AUTHORITY OF THE OWNERS, I HAVE MADE A SURVEY OF THE TRACT OF LAND SHOWN ON THIS PLAT AND DESCRIBED BELOW, HAVE SUBDIVIDED SAID TRACT OF LAND INTO LOTS, STREETS, AND EASEMENTS, HAVE COMPLETED A SURVEY OF THE PROPERTY DESCRIBED ON THIS PLAT IN ACCORDANCE WITH UTAH CODE SECTION 17-23-17, HAVE VERIFIED ALL MEASUREMENTS, AND HAVE PLACED MONUMENTS AS REPRESENTED ON THE PLAT. I FURTHER CERTIFY THAT EVERY EXISTING RIGHT-OF-WAY AND EASEMENT GRANT OF RECORD FOR UNDERGROUND FACILITIES, AS DEFINED IN UTAH CODE SECTION 54-8A-2, AND FOR OTHER UTILITY FACILITIES, IS ACCURATELY DESCRIBED ON THIS PLAT, AND THAT THIS PLAT IS TRUE AND CORRECT. I ALSO CERTIFY THAT I HAVE FILED, OR WILL FILE WITHIN 90 DAYS OF THE RECORDATION OF THIS PLAT, A MAP OF THE SURVEY I HAVE COMPLETED WITH THE UTAH COUNTY SURVEYOR.

BOUNDARY DESCRIPTION

A PARCEL OF LAND SITUATED IN THE NORTHEAST QUARTER OF SECTION 22, TOWNSHIP 5 SOUTH, RANGE I WEST, SALT LAKE BASE AND MERIDIAN, SAID PARCEL BEING MORE PARTICULARLY DESCRIBED AS FOLLOWS:

BEGINNING AT A POINT WHICH IS S 89°53'16" W 1049.37 FEET FROM THE EAST 1/4 CORNER OF SAID SECTION 22; RUNNING THENCE S 89°53'17" W 242.03 FEET; THENCE N 00°06'43" W 145.50 FEET; THENCE N 33° 12'04" W 66.84 FEET; THENCE N 00°06'43" W 200.00 FEET; THENCE N 08°10'19" W 56.56 FEET; THENCE N 00°06'43" W 101.00 FEET; THENCE S 89°53'17" W 6.59 FEET; THENCE N 00°06'43" W 99.98 FEET; THENCE N 17°21'37" W 58.64 FEET; THENCE N 00°40'34" E 107.08 FEET TO A POINT ALONG THE SOUTH BOUNDARY LINE OF SIERRA ESTATES PLAT "B"; THENCE ALONG SAID BOUNDARY THE FOLLOWING TWO COURSES: (1) S 69°14'54" E 99.24 FEET; (2) N 89°54'49" E 180.24 FEET TO A POINT ALONG THE WEST BOUNDARY LINE OF SIERRA ESTATES PLAT "A"; THENCE ALONG SAID BOUNDARY THE FOLLOWING FIVE COURSES: (1) S 00°02'53" E 122.13 FEET; (2) S 11°35'57" W 57.18 FEET; (3) S 00°02'53" E 98.39 FEET; (4) S 14°00'06" E 201.61 FEET; (5) S 00°00'33" E 313.91 FEET TO THE POINT OF BEGINNING.

CONTAINS: 4.69 ACRES

OF LOTS: 14

BASIS OF BEARING: SECTION LINE BETWEEN THE EAST 1/4 CORNER AND THE SOUTHEAST CORNER OF SECTION 22 T5S, R1W, SLB&M BEARING S 00°01'27" W 2650.79 FEET.

_______________ DATE

_______________ SURVEYOR'S NAME
LICENSE NO. _______________

OWNER'S DEDICATION

KNOW ALL MEN BY THESE PRESENTS THAT _______________, THE _______________ UNDERSIGNED OWNER(S) OF THE ABOVE DESCRIBED TRACT OF LAND HAVING CAUSED THE SAME TO BE SUBDIVIDED INTO LOTS AND STREETS TO BE HEREAFTER KNOWN AS

SIERRA ESTATES PLAT "D"

DO HEREBY DEDICATE FOR PERPETUAL USE OF THE PUBLIC AND/OR CITY ALL PARCELS OF LAND, EASEMENTS, RIGHT-OF-WAY, AND PUBLIC AMENITIES SHOWN ON THIS PLAT AS INTENDED FOR PUBLIC AND/OR CITY USE. THE OWNER(S) VOLUNTARILY DEFEND, INDEMNIFY, AND SAVE HARMLESS THE CITY AGAINST ANY EASEMENTS OR OTHER ENCUMBRANCE ON A DEDICATED STREET WHICH WILL INTERFERE WITH THE CITY'S USE, MAINTENANCE AND OPERATION OF THE STREET. THE OWNER(S) VOLUNTARILY DEFEND, INDEMNIFY, AND HOLD HARMLESS THE CITY FROM ANY DAMAGE CLAIMED BY PERSONS WITHIN OR WITHOUT THIS SUBDIVISION TO HAVE BEEN CAUSED BY ALTERATIONS OF THE GROUND SURFACE, VEGETATION, DRAINAGE, OR SURFACE OR SUB-SURFACE WATER FLOWS WITHIN THIS SUBDIVISION OR BY ESTABLISHMENT OR CONSTRUCTION OF THE ROADS WITHIN THIS SUBDIVISION.

IN WITNESS HEREOF, _____HAVE HEREUNTO SET _________ THIS ___________ DAY OF _______________, A.D. 20___.

CORPORATE ACKNOWLEDGMENT

STATE OF UTAH
COUNTY OF UTAH } S.S.

ON THE _________DAY OF_________, A.D. 20___ PERSONALLY APPEARED BEFORE ME, _______________ AND, WHO BEING BY ME DULY SWORN DID SAY EACH FOR HIMSELF, THAT HE, THE SAID _______________ IS THE PRESIDENT AND HE THE SAID _______________ IS THE SECRETARY OF _______________ CORPORATION, AND THAT THE WITHIN AND FOREGOING INSTRUMENT WAS SIGNED IN BEHALF OF SAID CORPORATION BY AUTHORITY OF A RESOLUTION OF ITS BOARD OF DIRECTORS AND SAID _______________ AND _______________ EACH DULY ACKNOWLEDGE TO ME THAT SAID CORPORATION EXECUTED THE SAME AND THAT THE SEAL AFFIXED IS THE SEAL OF SAID CORPORATION

MY COMMISSION EXPIRES _______________ _______________
NOTARY PUBLIC RESIDING AT
(SEE SEAL BELOW)

ACCEPTANCE BY LEGISLATIVE BODY

THE CITY COUNCIL OF THE CITY OF SARATOGA SPRINGS, COUNTY OF UTAH, APPROVES THIS SUBDIVISION SUBJECT TO THE CONDITIONS AND RESTRICTIONS STATED HEREON, AND HEREBY ACCEPTS THE DEDICATION OF ALL STREETS, EASEMENTS, AND OTHER PARCELS OF LAND INTENDED FOR PUBLIC PURPOSE OF THE PERPETUAL USE OF THE PUBLIC.

THIS___________ DAY OF _______________, A.D. _____.

_______________ CITY MAYOR

ATTEST _______________ CITY RECORDER
(SEE SEAL BELOW)

JUL 17, 2014

PLAT "D"
SIERRA ESTATES

LOCATED IN THE NORTHEAST QUARTER OF SECTION 22
TOWNSHIP 5 SOUTH, RANGE I WEST, SALT LAKE BASE AND MERIDIAN
SARATOGA SPRINGS CITY, UTAH COUNTY, STATE OF UTAH

SCALE: 1" = 50 FEET

SURVEYOR'S SEAL	NOTARY PUBLIC SEAL	CITY ENGINEER SEAL	CLERK-RECORDER SEAL

berg
CIVIL ENGINEERING
11038 N Highland Blvd Suite 400
Highland Ut, 84003
office (801) 492-1277
cell (801) 616-1677

AZTEC ENGINEERING
491 N 450 W
OREM, UT 84057

FIRE CHIEF APPROVAL

APPROVED BY THE FIRE CHIEF ON THIS __________ DAY OF_______________ A.D. 20______,

CITY FIRE CHIEF

PLANNING COMMISSION REVIEW

REVIEWED BY THE PLANNING COMMISSION ON THIS __________ DAY OF_______________ A.D. 20______,

CHAIRMAN, PLANNING COMMISSION

SARATOGA SPRINGS ENGINEER APPROVAL

APPROVAL BY THE CITY ENGINEER ON THIS __________ DAY OF_______________ A.D. 20______,

CITY ENGINEER

SARATOGA SPRINGS ATTORNEY

APPROVAL BY SARATOGA SPRINGS ATTORNEY ON THIS __________ DAY OF_______________ A.D. 20______,

SARATOGA SPRINGS ATTORNEY

LEHI CITY POST OFFICE

APPROVED BY POST OFFICE REPRESENTATIVE ON THIS__________ DAY OF_______________ A.D. 20______,

LEHI CITY POST OFFICE REPRESENTATIVE

SIERRA ESTATES PLAT "D"

LOCATED IN THE NORTHEAST QUARTER OF SECTION 22,
TOWNSHIP 5 SOUTH, RANGE 1 WEST, SALT LAKE BASE AND MERIDIAN
SARATOGA SPRINGS CITY, UTAH COUNTY, UTAH

NOTES

1. CONTRACTOR SHALL FIELD VERIFY LOCATIONS AND INVERT ELEVATIONS OF EXISTING MANHOLES AND OTHER UTILITIES BEFORE STAKING OR CONSTRUCTING ANY NEW SEWER LINES.
2. CONTRACTOR SHALL FIELD VERIFY LOCATIONS AND INVERT ELEVATIONS OF EXISTING STORM DRAIN STRUCTURES AND OTHER UTILITIES BEFORE STAKING OR CONSTRUCTING ANY NEW STORM DRAIN LINES.
3. ALL CONSTRUCTION SHALL COMPLY TO THE STANDARD TECHNICAL SPECIFICATIONS AND DRAWINGS FOR THE CITY OF SARATOGA SPRINGS, UTAH.
4. EXISTING UTILITIES HAVE BEEN NOTED TO THE BEST OF ENGINEERS KNOWLEDGE, IT IS OWNERS AND CONTRACTORS RESPONSIBILITY TO LOCATE UTILITIES IN FIELD AND NOTIFY ENGINEER AND CITY IF DISCREPANCIES EXIST.
5. POST–APPROVAL ALTERATIONS TO LIGHTING PLANS OR INTENDED SUBSTITUTIONS FOR APPROVED LIGHTING EQUIPMENT SHALL BE SUBMITTED TO THE CITY FOR REVIEW AND APPROVAL.
6. THE CITY RESERVES THE RIGHT TO CONDUCT POST–INSTALLATION INSPECTIONS TO VERIFY COMPLIANCE WITH THE CITY'S REQUIREMENTS AND APPROVED LIGHTING PLAN COMMITMENTS, AND IF DEEMED APPROPRIATE BY THE CITY, TO REQUIRE REMEDIAL ACTION AT NO EXPENSE TO THE CITY.
7. ALL EXTERIOR LIGHTING SHALL MEET IESNA FULL–CUTOFF CRITERIA UNLESS OTHERWISE APPROVED BY THE CITY.
8. NO SLOPES GREATER THAN 30% ON–SITE.
9. NO WETLANDS ON–SITE.
10. NO FLOOD PLAINS ON–SITE.

LEGEND

- SECTION CORNER MONUMENT
- SUBDIVISION SURVEY MONUMENT
- STREET LIGHT
- STREET SIGN
- TRAFFIC SIGN
- PROPOSED FIRE HYDRANT
- EXISTING FIRE HYDRANT
- PROPERTY LINE
- LOT LINE
- EASEMENT LINE

SHEET INDEX

C1	COVER SHEET
C2	OVERALL UTILITY PLAN
C3	GRADING & DRAINAGE PLAN
C4	TIOGA AVE. PLAN & PROFILE
C5	BONO BLVD. & BAXTER BLVD. PLAN & PROFILE
C6	LEWIS LANE PLAN & PROFILE
C7	400 NORTH PLAN & PROFILE
C8	400 NORTH STRIPING PLAN
C9	EXISTING/DEMOLITION PLAN
C10	LANDSCAPE PLAN
DI-6	CONSTRUCTION DETAILS SHEET
SWI	STORMWATER MANAGEMENT PLAN

DATA TABLE

TOTAL LOTS:	14
ZONE:	R-3
TOTAL DEVELOPMENT:	4.69 ACRES
PUBLIC ROAD DEDICATION:	1.58 ACRES (34%)
TOTAL LOT AREA:	3.11 ACRES (66%)
DENSITY:	4.50 DU/ACRE
TOTAL IMPERVIOUS AREA:	0.45 ACRES
TOTAL LANDSCAPE AREA:	2,177 SQ. FT.

CURVE TABLE

C1	200.00	15.19	04°21'08"	15.19	S 87°48'53" W
C2	200.00	14.83	04°14'58"	14.83	S 87°45'48" W
C3	200.00	15.06	04°18'48"	15.05	N 02°12'17" W
C4	200.00	53.40	15°17'58"	53.25	N 07°36'06" E
C5	200.00	53.40	15°17'58"	53.25	N 82°23'54" W
C6	200.00	53.63	15°21'48"	53.47	N 82°25'49" W
C7	172.00	13.07	04°21'08"	13.06	S 87°48'53" W
C8	228.00	16.91	04°14'58"	16.91	S 87°45'48" W
C9	172.00	12.76	04°14'58"	12.75	S 87°45'48" W
C10	15.00	23.56	90°00'00"	21.21	S 40°38'19" W
C11	15.00	23.56	90°00'00"	21.21	S 49°21'41" E
C12	228.00	17.32	04°21'08"	17.31	S 87°48'53" W
C13	15.00	22.45	85°45'02"	20.41	N 47°14'12" W
C14	15.00	24.67	94°14'58"	21.99	N 42°45'48" E
C15	228.00	17.16	04°18'48"	17.16	N 02°12'17" W
C16	172.00	12.95	04°18'48"	12.95	N 02°12'17" W
C17	172.00	42.63	14°12'03"	42.52	N 07°03'09" E
C18	15.00	23.85	91°05'54"	21.42	N 59°42'07" E
C19	228.00	60.88	15°17'58"	60.70	N 82°23'54" W
C20	228.00	58.06	14°35'23"	57.90	S 07°14'48" W
C21	15.00	23.38	89°17'25"	21.08	N 30°06'13" W
C22	172.00	46.12	15°21'48"	45.98	N 82°25'49" W
C23	228.00	61.14	15°21'48"	60.95	N 82°25'49" W
C24	172.00	45.93	15°17'58"	45.79	N 82°23'54" W

BOUNDARY DESCRIPTION

A PARCEL OF LAND SITUATED IN THE NORTHEAST QUARTER OF SECTION 22, TOWNSHIP 5 SOUTH, RANGE 1 WEST, SALT LAKE BASE AND MERIDIAN, SAID PARCEL BEING MORE PARTICULARLY DESCRIBED AS FOLLOWS

BEGINNING AT A POINT WHICH IS S 89°53'16" W 1049.37 FEET FROM THE EAST 1/4 CORNER OF SAID SECTION 22; RUNNING THENCE S 89°53'17" W 242.03 FEET; THENCE N 00°06'43" W 145.50 FEET; THENCE N 33° 12'04" W 66.84 FEET; THENCE N 00°06'43" W 200.00 FEET; THENCE N 00°10'19" W 56.56 FEET; THENCE N 00°06'43" W 101.00 FEET; THENCE S 89°53'17" W 6.59 FEET; THENCE N 00°06'43" W 99.98 FEET; THENCE N 17°21'37" W 58.64 FEET; THENCE N 00°40'34" E 107.08 FEET TO A POINT ALONG THE SOUTH BOUNDARY LINE OF SIERRA ESTATES PLAT "B"; THENCE ALONG SAID BOUNDARY THE FOLLOWING TWO COURSES: (1) S 69°14'54" E 99.24 FEET; (2) N 89°54'49" E 180.24 FEET TO A POINT ALONG THE WEST BOUNDARY LINE OF SIERRA ESTATES PLAT "A"; THENCE ALONG SAID BOUNDARY THE FOLLOWING FIVE COURSES: (1) S 00°02'53" E 122.13 FEET; (2) S 11°35'57" W 57.18 FEET; (3) S 00°02'53" E 98.39 FEET; (4) S 14°00'06" E 201.61 FEET; (5) S 00°00'33" E 313.91 FEET TO THE POINT OF BEGINNING.

CONTAINS: 4.69 ACRES

OF LOTS: 14

BASIS OF BEARING: SECTION LINE BETWEEN THE EAST 1/4 CORNER AND THE SOUTHEAST CORNER OF SECTION 22 T5S, R1W, SLB&M BEARING S 00°01'27" W 2650.79 FEET.

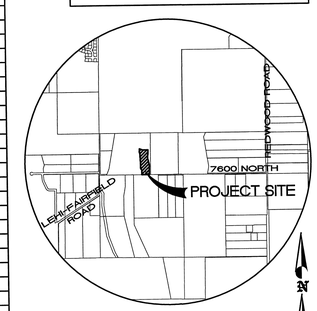

VICINITY SKETCH

DEVELOPMENT

SIERRA ESTATES PLAT "D"

DEVELOPER

PATTERSON HOMES
www.phutah.com
11038 N. Highland Blvd Suite 100
Highland, UT 84003
(801) 642-0119

0 25 50 100 150
SCALE: 1"= 50'

berg
CIVIL ENGINEERING
11038 N Highland Blvd Suite 400
Highland Ut, 84003
office (801) 492-1277
cell (801) 616-1677

REVISIONS

NO.	DATE	DESCRIPTION
1		
2		
3		
4		
5		
6		
7		

SEAL

PROFESSIONAL ENGINEER — LYDON J. BERG — STATE OF UTAH — 9-9-14

ACTION	DATE
FINAL PLANS	7/17/2014

PROJECT

SIERRA ESTATES PLAT "D"

DESCRIPTION

FINAL CONSTRUCTION PLANS

COVER SHEET

SHEET NAME	SHEET NUMBER
COVER	C1

C:\DOCUMENTS\SIERRA ESTATES\SIERRA ESTATES PLAT D.DWG

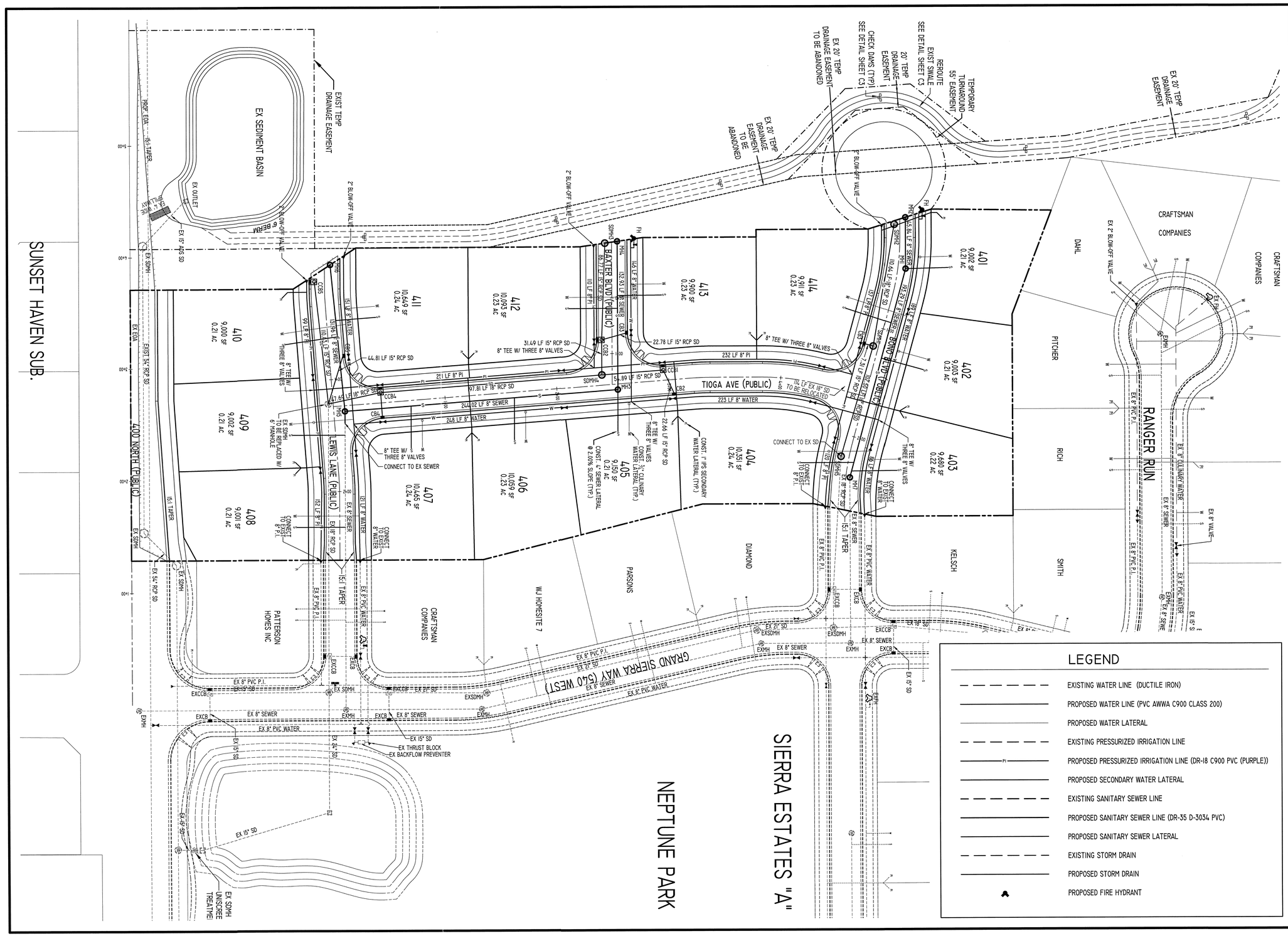

DEVELOPMENT

SIERRA ESTATES PLAT "D"

DEVELOPER

PATTERSON HOMES
www.phutah.com
11038 N. Highland Blvd Suite 100
Highland, UT 84003
(801) 642-0119

SCALE: 1"= 40'

Berg CIVIL ENGINEERING
11038 N Highland Blvd Suite 400
Highland UT, 84003
office (801) 492-1277
cell (801) 616-1677

REVISIONS			SEAL
NO.	DATE	DESCRIPTION	PROFESSIONAL ENGINEER Kenneth A. Berg 9-9-14 STATE OF UTAH
1			
2			
3			
4			
5			
6			
7			

ACTION	DATE
FINAL PLANS	7/17/2014

PROJECT

SIERRA ESTATES PLAT "D"

DESCRIPTION

FINAL CONSTRUCTION PLANS

OVERALL UTILITY PLAN

SHEET NAME	SHEET NUMBER
UTILITY PLAN	C2

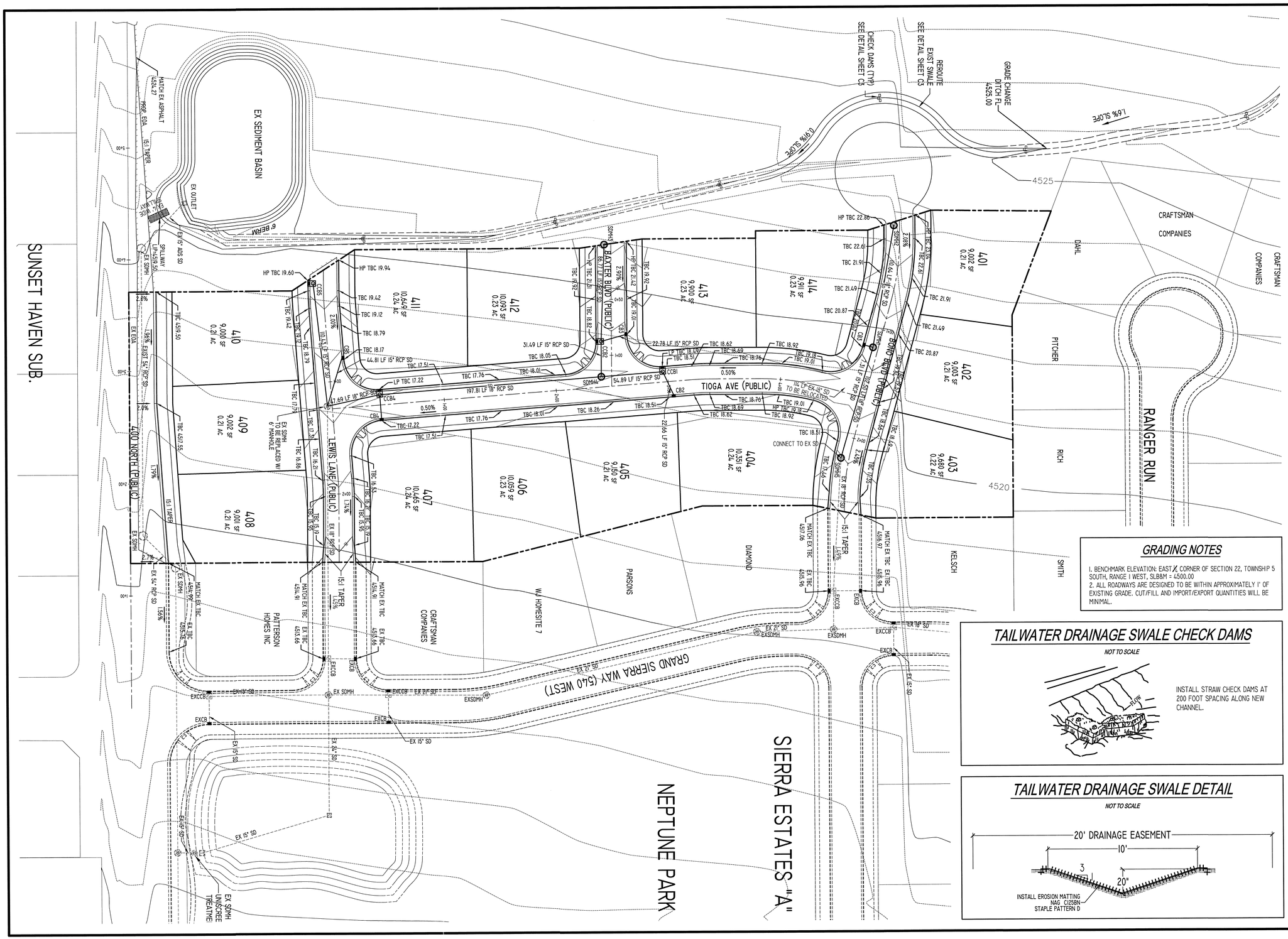

GRADING NOTES

1. BENCHMARK ELEVATION: EAST 1/4 CORNER OF SECTION 22, TOWNSHIP 5 SOUTH, RANGE 1 WEST, SLB&M = 4500.00
2. ALL ROADWAYS ARE DESIGNED TO BE WITHIN APPROXIMATELY 1' OF EXISTING GRADE. CUT/FILL AND IMPORT/EXPORT QUANTITIES WILL BE MINIMAL.

TAILWATER DRAINAGE SWALE CHECK DAMS

NOT TO SCALE

INSTALL STRAW CHECK DAMS AT 200 FOOT SPACING ALONG NEW CHANNEL.

TAILWATER DRAINAGE SWALE DETAIL

NOT TO SCALE

DEVELOPMENT

SIERRA ESTATES PLAT "D"

DEVELOPER

PATTERSON HOMES
www.phutah.com
11038 N. Highland Blvd Suite 100
Highland, UT 84003
(801) 642-0119

SCALE: 1"= 40'

CIVIL ENGINEERING
11038 N Highland Blvd Suite 400
Highland UT, 84003
office (801) 492-1277
cell (801) 616-1677

REVISIONS			SEAL
NO.	DATE	DESCRIPTION	
1			
2			
3			
4			
5			
6			
7			

ACTION	DATE
FINAL PLANS	7/17/2014

PROJECT

SIERRA ESTATES PLAT "D"

DESCRIPTION

FINAL CONSTRUCTION PLANS

OVERALL GRADING & DRAINAGE PLAN

SHEET NAME	SHEET NUMBER
DRAINAGE PLAN	C3

TIOGA AVENUE PLAN

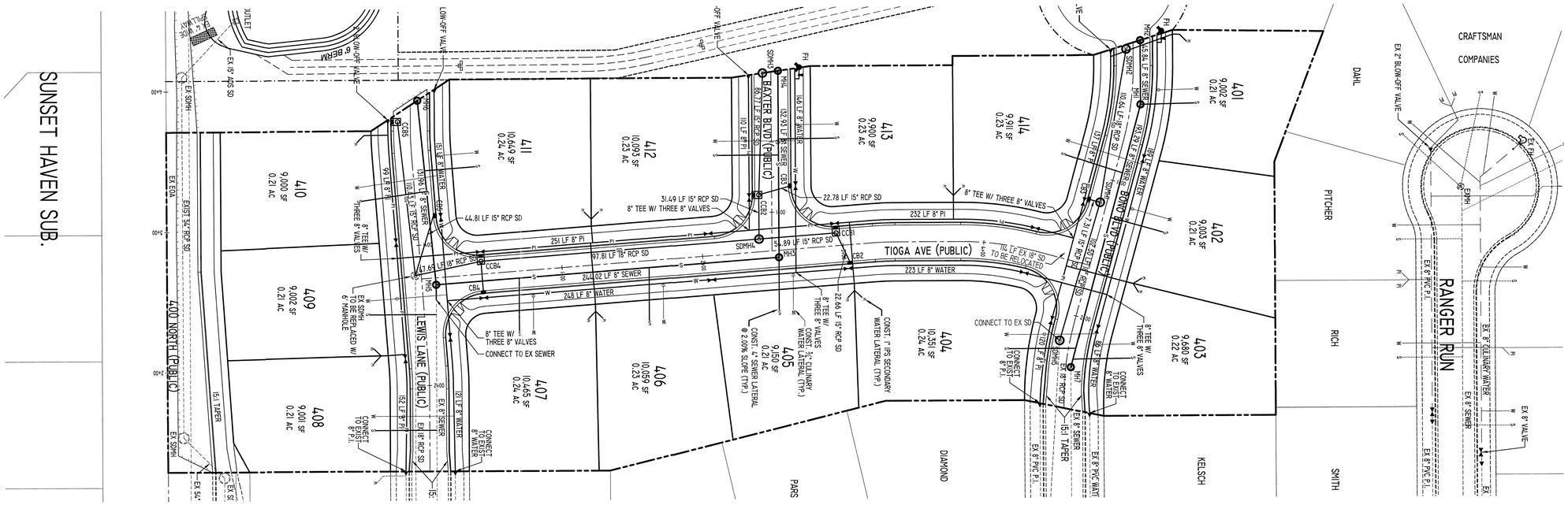

TIOGA AVENUE PROFILE

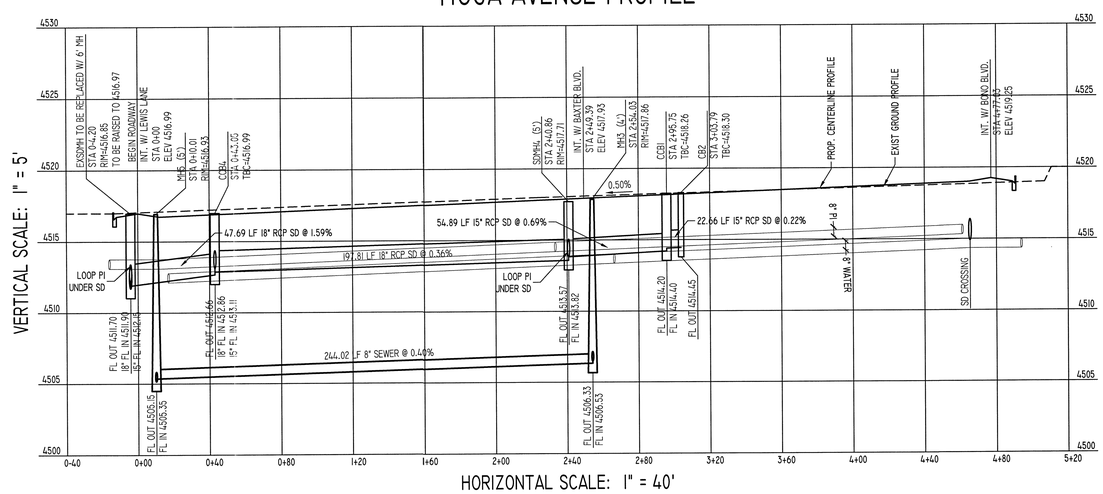

DEVELOPMENT

SIERRA ESTATES PLAT "D"

DEVELOPER

PATTERSON HOMES
www.phutah.com

11038 N. Highland Blvd Suite 100
Highland, UT 84003
(801) 642-0119

SCALE: 1"= 40'

Berg
CIVIL ENGINEERING
11038 N Highland Blvd Suite 400
Highland UT, 84003
office (801) 492-1277
cell (801) 616-1677

REVISIONS

NO.	DATE	DESCRIPTION
1		
2		
3		
4		
5		
6		
7		

SEAL

PROFESSIONAL ENGINEER
Kenneth Rey Berg
9-4-14
UTAH

ACTION	DATE
FINAL PLANS	7/17/2014

PROJECT

SIERRA ESTATES PLAT "D"

DESCRIPTION

FINAL CONSTRUCTION PLANS

TIOGA AVENUE PLAN & PROFILE

SHEET NAME	SHEET NUMBER
PLAN & PROFILE	C4

U:\CIVIL\SIERRA ESTATES\FINAL PLAT D\C PLAN & PROFILE.DWG

BONO BLVD. & BAXTER BLVD. PLAN

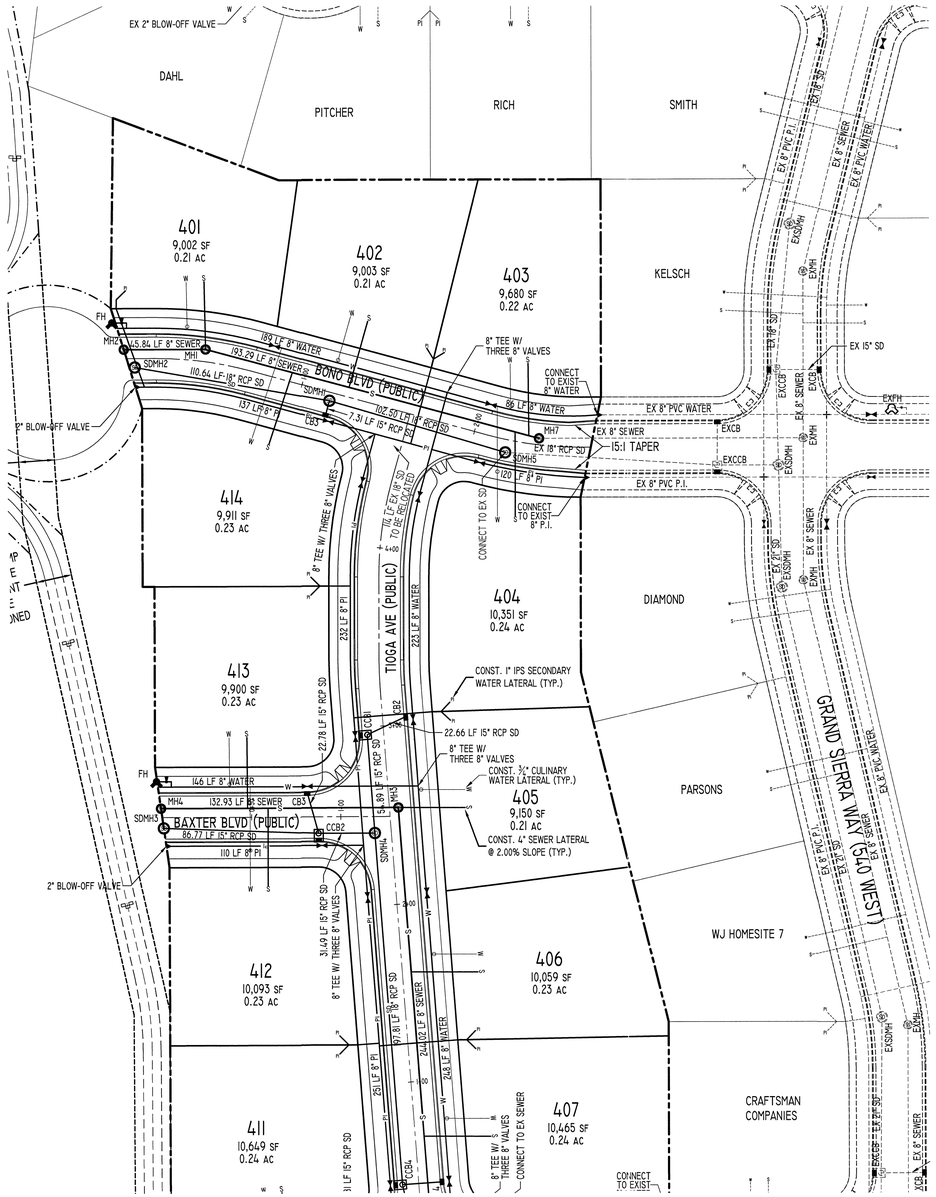

BONO BLVD. PROFILE

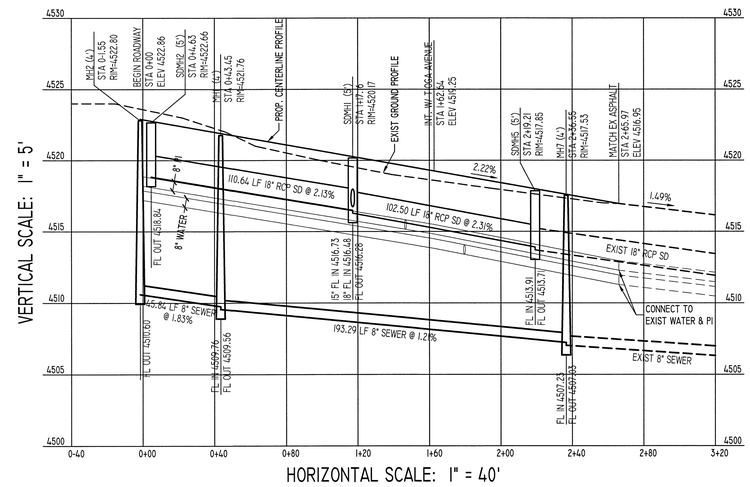

BAXTER BLVD. PROFILE

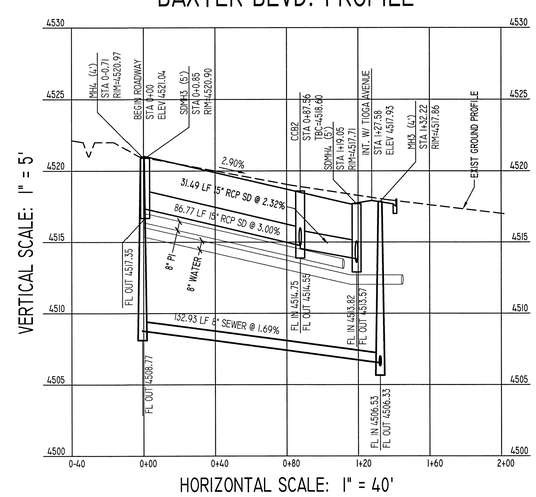

DEVELOPMENT

SIERRA ESTATES PLAT "D"

DEVELOPER

PATTERSON HOMES
www.phutah.com
11038 N. Highland Blvd Suite 100
Highland, UT 84003
(801) 642-0119

SCALE: 1"= 40'

CIVIL ENGINEERING
11038 N Highland Blvd Suite 400
Highland Ut, 84003
office (801) 492-1277
cell (801) 616-1677

REVISIONS

NO.	DATE	DESCRIPTION
1		
2		
3		
4		
5		
6		
7		

SEAL

ACTION	DATE
FINAL PLANS	7/17/2014

PROJECT

SIERRA ESTATES PLAT "D"

DESCRIPTION

FINAL CONSTRUCTION PLANS

BONO BLVD. & BAXTER BLVD. PLAN & PROFILE

SHEET NAME	SHEET NUMBER
PLAN & PROFILE	C5

LEWIS LANE PLAN

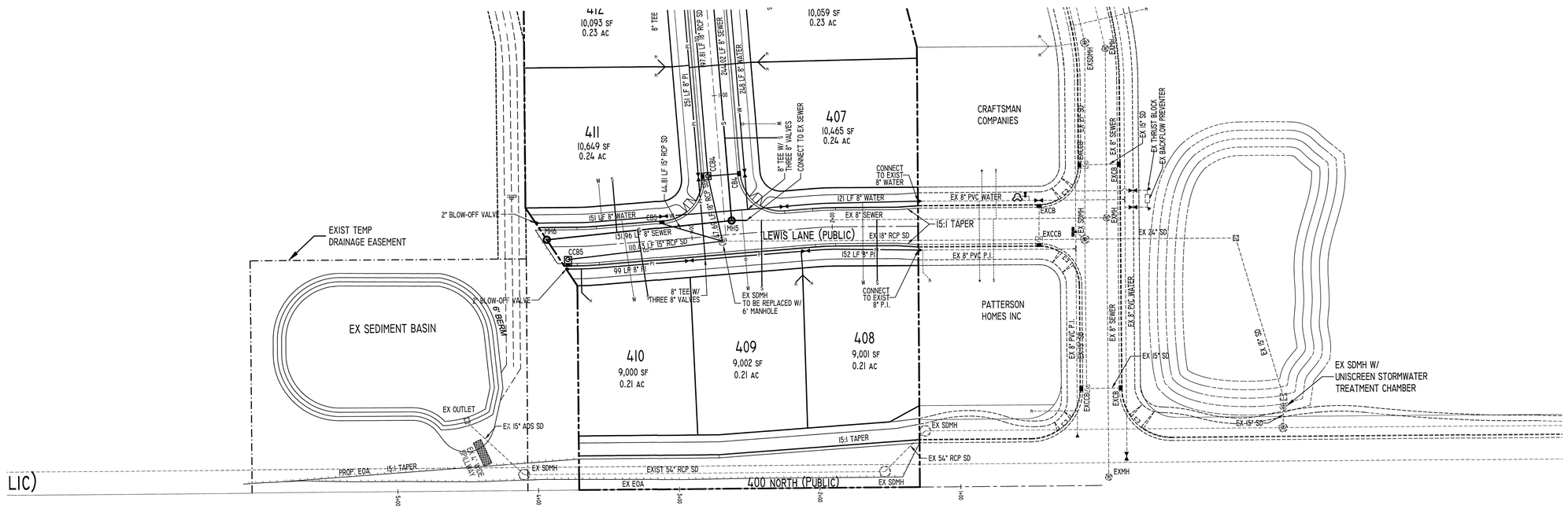

LEWIS LANE PROFILE

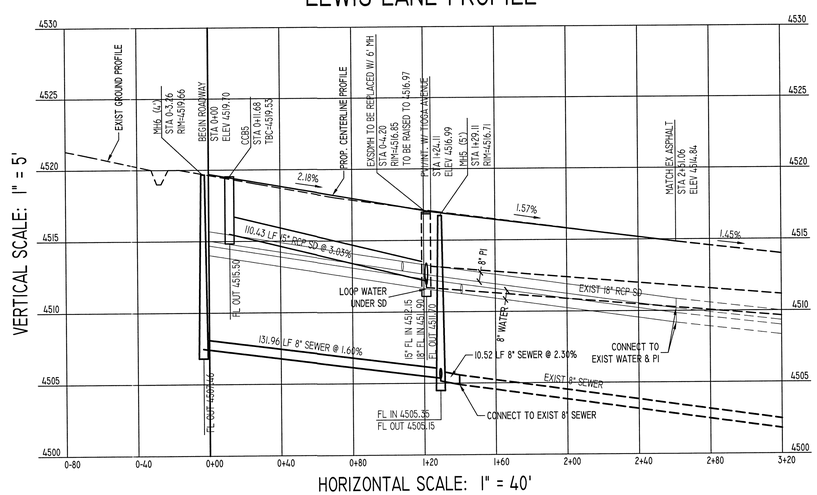

DEVELOPMENT

SIERRA ESTATES PLAT "D"

DEVELOPER

PATTERSON HOMES
www.phutah.com

11038 N. Highland Blvd Suite 100
Highland, UT 84003
(801) 642-0119

N

0 20 40 80 120
SCALE: 1"= 40'

berg
CIVIL ENGINEERING
11038 N Highland Blvd Suite 400
Highland Ut, 84003
office (801) 492-1277
cell (801) 616-1677

REVISIONS

NO.	DATE	DESCRIPTION
1		
2		
3		
4		
5		
6		
7		

SEAL

ACTION	DATE
FINAL PLANS	7/17/2014

PROJECT

SIERRA ESTATES PLAT "D"

DESCRIPTION

FINAL CONSTRUCTION PLANS

LEWIS LANE PLAN & PROFILE

SHEET NAME	SHEET NUMBER
PLAN & PROFILE	C6

400 NORTH PLAN

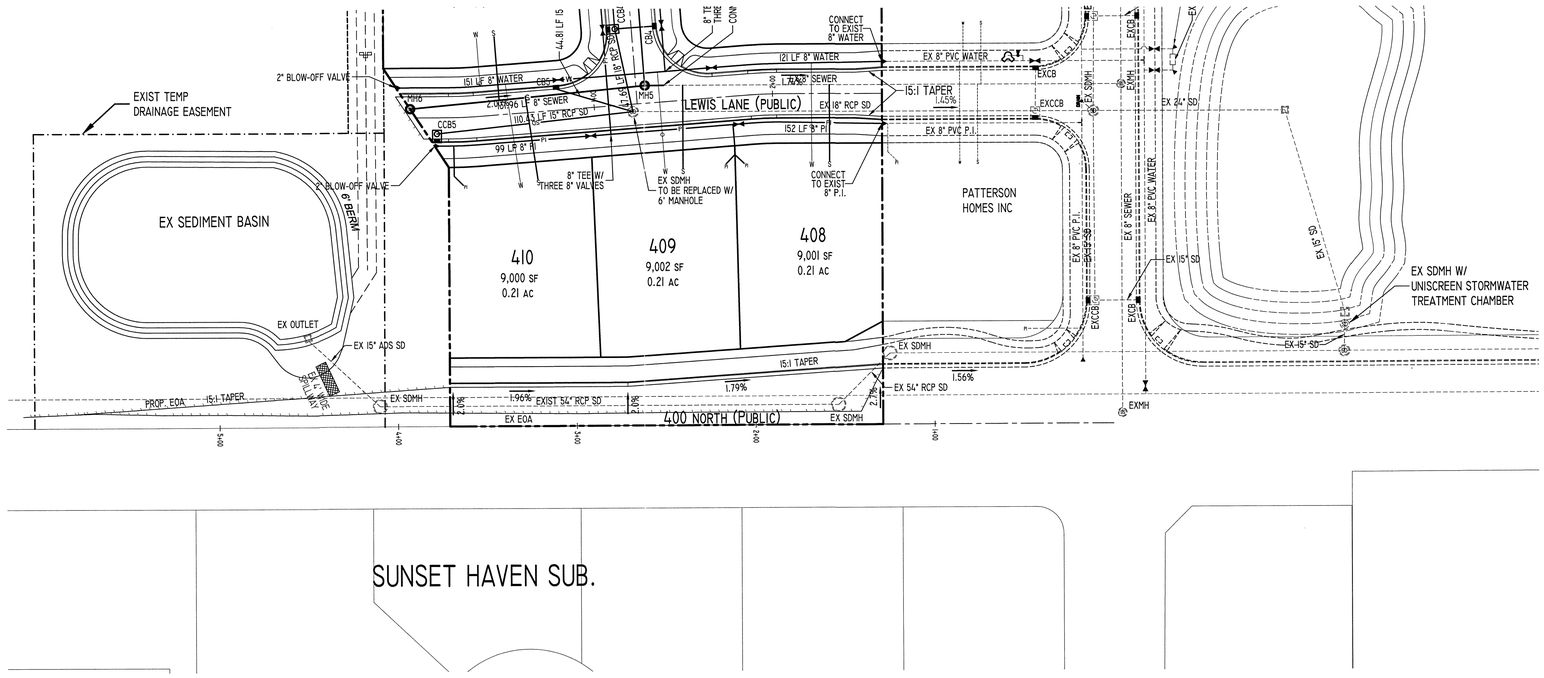

400 NORTH TBC PROFILE

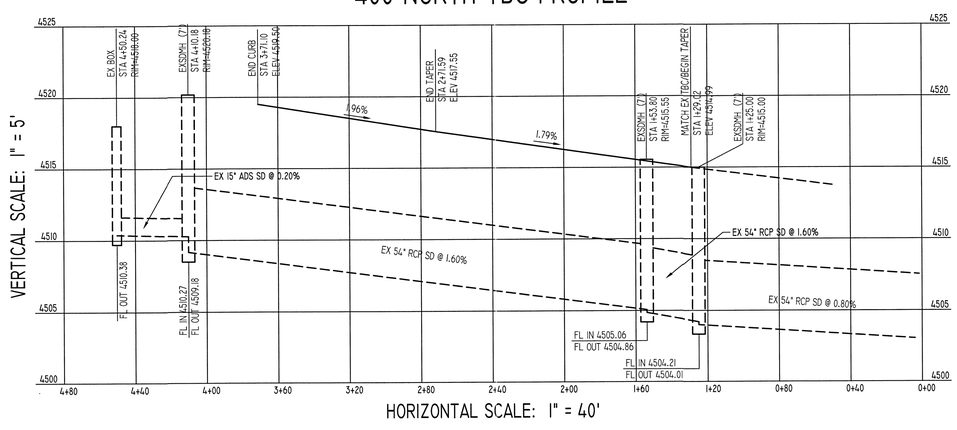

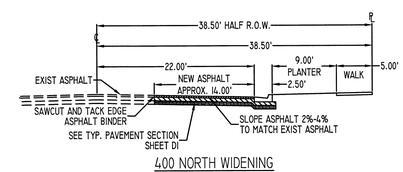

400 NORTH WIDENING
NOT TO SCALE

DEVELOPMENT

SIERRA ESTATES PLAT "D"

DEVELOPER

PATTERSON HOMES
www.phutah.com

11038 N. Highland Blvd Suite 100
Highland, UT 84003
(801) 642-0119

N

0 20 40 80 120
SCALE: 1"= 40'

Gerg
CIVIL ENGINEERING
11038 N Highland Blvd Suite 400
Highland Ut. 84003
office (801) 492-1277
cell (801) 616-1677

REVISIONS			SEAL
NO.	DATE	DESCRIPTION	
1			
2			
3			
4			
5			
6			
7			

ACTION	DATE
FINAL PLANS	7/17/2014

PROJECT

SIERRA ESTATES PLAT "D"

DESCRIPTION

FINAL CONSTRUCTION PLANS

400 NORTH PLAN & PROFILE

SHEET NAME	SHEET NUMBER
PLAN & PROFILE	C7

400 NORTH EXISTING STRIPING

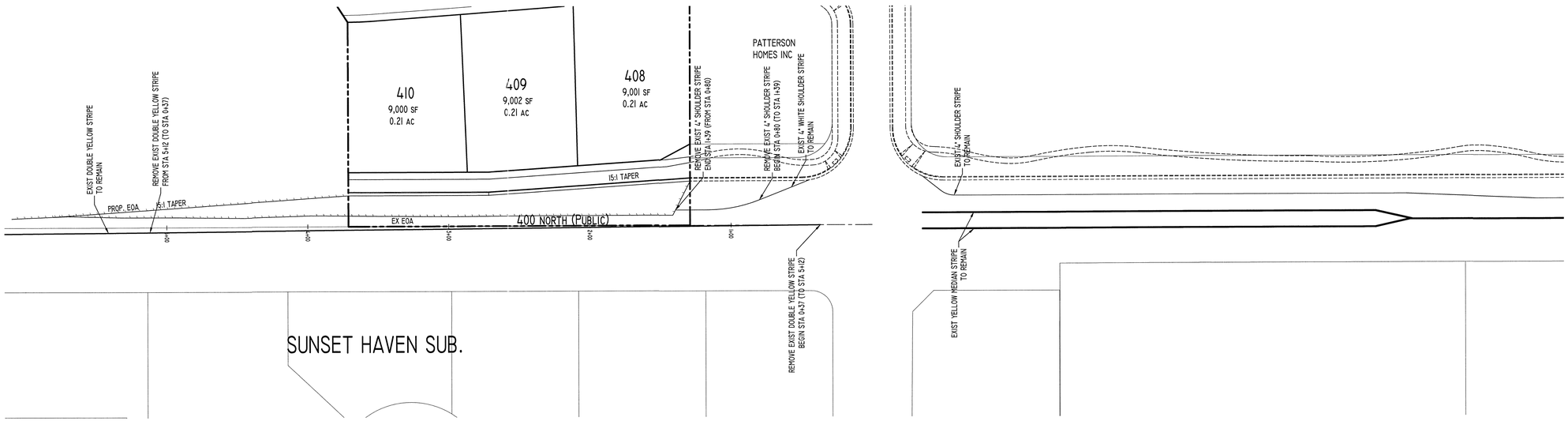

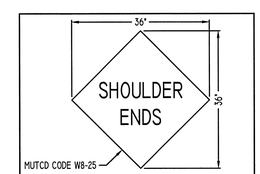

TRAFFIC SIGN A

NOT TO SCALE

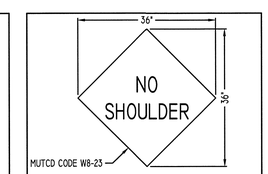

TRAFFIC SIGN B

NOT TO SCALE

400 NORTH PROPOSED STRIPING

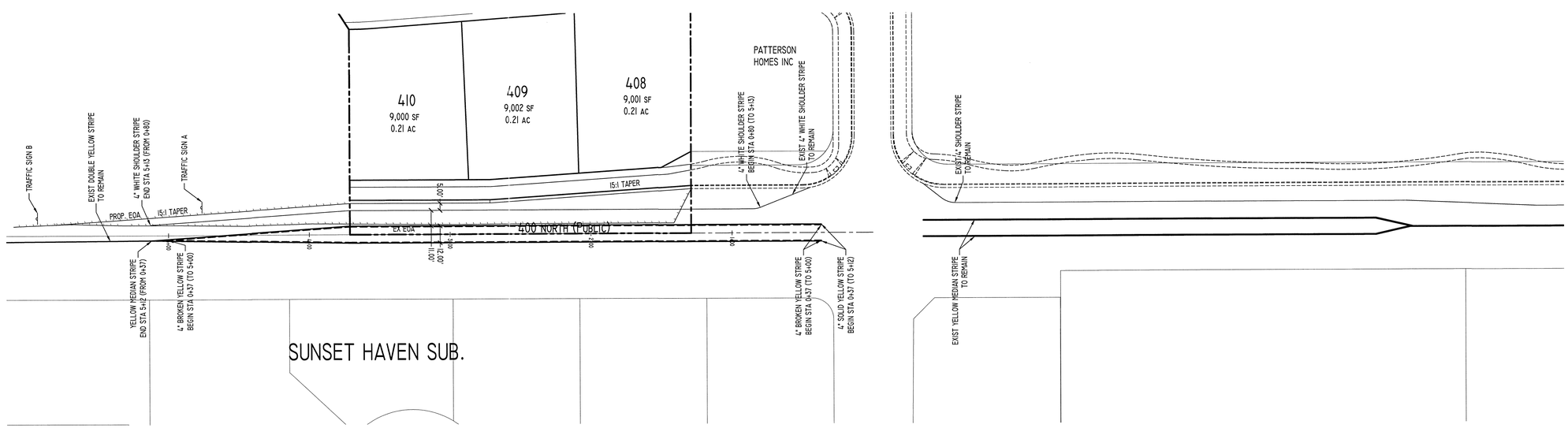

DEVELOPMENT

SIERRA ESTATES PLAT "D"

DEVELOPER

PATTERSON HOMES
www.phutah.com

11038 N. Highland Blvd Suite 100
Highland, UT 84003
(801) 642-0119

N

0 20 40 80 120
SCALE: 1"= 40'

CIVIL ENGINEERING
11038 N Highland Blvd Suite 400
Highland Ut, 84003
office (801) 492-1277
cell (801) 616-1677

REVISIONS

NO.	DATE	DESCRIPTION
1		
2		
3		
4		
5		
6		
7		

SEAL

ACTION	DATE
FINAL PLANS	7/17/2014

PROJECT

SIERRA ESTATES PLAT "D"

DESCRIPTION

FINAL CONSTRUCTION PLANS

400 NORTH STRIPING PLAN

SHEET NAME	SHEET NUMBER
STRIPING PLAN	C8

DEVELOPMENT

SIERRA ESTATES PLAT "D"

DEVELOPER

PATTERSON HOMES
www.phutah.com
11038 N. Highland Blvd Suite 100
Highland, UT 84003
(801) 642-0119

SCALE: 1"= 40'

Berg
CIVIL ENGINEERING
11038 N Highland Blvd Suite 400
Highland Ut, 84003
office (801) 492-1277
cell (801) 616-1677

REVISIONS			SEAL
NO.	DATE	DESCRIPTION	
1			
2			
3			
4			
5			
6			
7			

ACTION	DATE
FINAL PLANS	7/17/2014

PROJECT

SIERRA ESTATES PLAT "D"

DESCRIPTION

FINAL CONSTRUCTION PLANS

EXISTING & DEMOLITION PLAN

SHEET NAME	SHEET NUMBER
DEMO PLAN	C9

400 NORTH LANDSCAPE PLAN

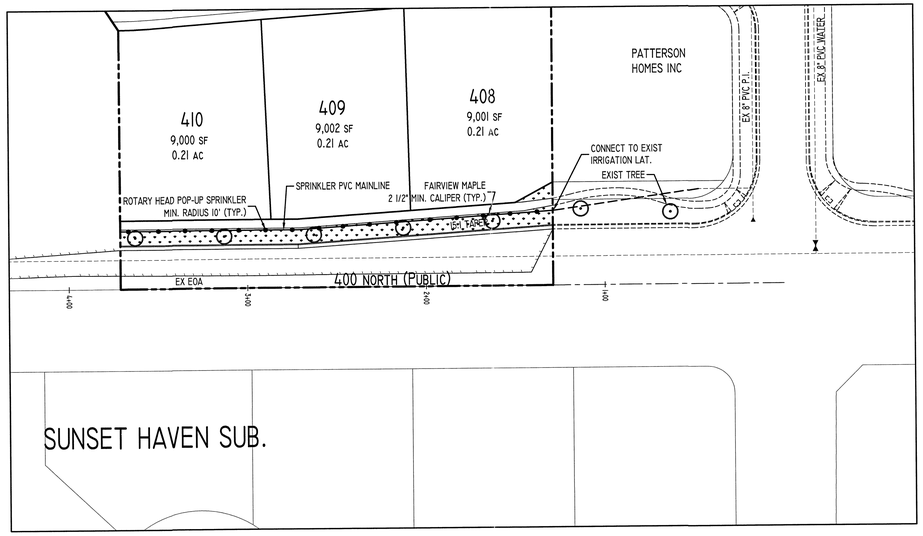

PLANT SCHEDULE

SYMBOL	DESCRIPTION	SCIENTIFIC NAME	SIZE	QUANTITY
⊙	FAIRVIEW MAPLE	ACER PLATANOIDES 'FAIRVIEW'	2.5" CALIPER	6
	SOD	N/A	N/A	2,177 SF

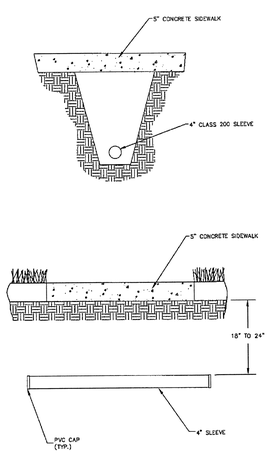

NOTES:
1. ONE WATER LINE PER SLEEVE.
2. ELECTRICITY AND WATER NOT TO SHARE SLEEVES.

SPRINKLER SYSTEM SLEEVING DETAIL

DATE: APRIL 2014 | DRAWING NAME: LS-9 | DRAWN BY: | CHECKED | APPROVED | REVISIONS: DATE | COMMENTS | SARATOGA SPRINGS CITY | STANDARD DETAILS | LANDSCAPING | LS-9

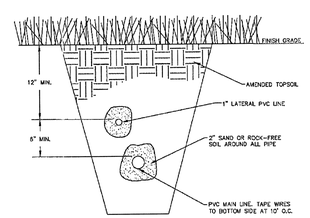

SPRINKLER SYSTEM PIPE/TRENCH DETAIL

DATE: APRIL 2014 | DRAWING NAME: LS-10 | DRAWN BY: | CHECKED | APPROVED | REVISIONS: DATE | COMMENTS | SARATOGA SPRINGS CITY | STANDARD DETAILS | LANDSCAPING | LS-10

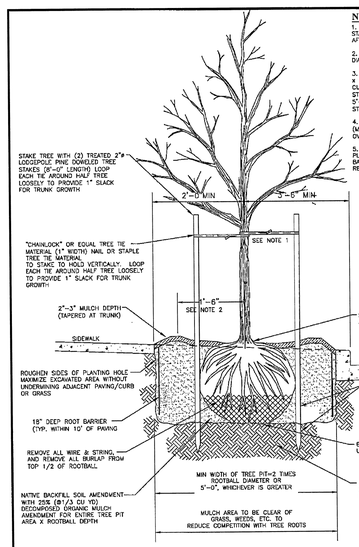

NOTES:
1. INSTALLATION INCLUDES REMOVAL OF STAKES AND WATERING RING ONE YEAR AFTER INSTALLATION.
2. SHAPE SOIL SURFACE TO PROVIDE 3' DIAMETER WATERING RING.
3. MULCH TREE PIT MIN 5'-0" LENGTH x FULL PLANTING STRIP WIDTH BETWEEN CURB AND SIDEWALK (FOR PLANTING STRIPS LESS THAN 8'-0"WIDE.) PROVIDE 5'-0"Ø MULCH RING FOR PLANTING STRIPS WIDER THAN 8'-0".
4. TREE PIT DEPTH = ROOTBALL DEPTH (MEASURE BEFORE DIGGING TO AVOID OVER EXCAVATION).
5. GRANULAR FERTILIZER PLACE AFTER PLANT HOLE IS BACKFILLED. QUANTITY BASED ON TREE GROWERS RECOMMENDATIONS.

TREE STAKING AND PLANTING

DATE: APRIL 2014 | DRAWING NAME: LS-13 | DRAWN BY: | CHECKED | APPROVED | REVISIONS: DATE | COMMENTS | SARATOGA SPRINGS CITY | STANDARD DETAILS | LANDSCAPING | LS-13

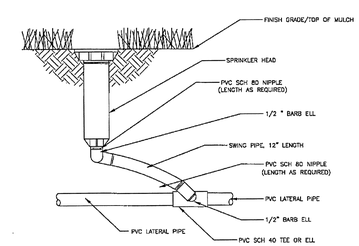

ROTORS FOR MEDIUM AND SMALL AREAS:

HUNTER I-20-06 @ 35' MAXIMUM SPACING

SPRAY HEADS FOR SMALL AREAS:

RAINBIRD #1806 FOR TURF AREAS, #1812 FOR SHRUB BEDS

HUNTER 6" PRO-SPRAY FOR TURF AREAS, 12" PRO-SPRAY FOR SHRUB BEDS

MEDIUM AND SMALL AREA SPRINKLER HEAD DETAIL

DATE: APRIL 2014 | DRAWING NAME: LS-7 | DRAWN BY: | CHECKED | APPROVED | REVISIONS: DATE | COMMENTS | SARATOGA SPRINGS CITY | STANDARD DETAILS | LANDSCAPING | LS-7

DEVELOPMENT

SIERRA ESTATES PLAT "D"

DEVELOPER

PATTERSON HOMES
www.phutah.com

11038 N. Highland Blvd Suite 100
Highland, UT 84003
(801) 642-0119

0 20 40 80 120
SCALE: 1"= 40'

Berg
CIVIL ENGINEERING
11038 N Highland Blvd Suite 400
Highland Ut, 84003
office (801) 492-1277
cell (801) 616-1677

REVISIONS			SEAL
NO.	DATE	DESCRIPTION	
1			
2			
3			
4			
5			
6			
7			

ACTION	DATE
FINAL PLANS	7/17/2014

PROJECT

SIERRA ESTATES PLAT "D"

DESCRIPTION

FINAL CONSTRUCTION PLANS

400 NORTH LANDSCAPE PLAN

SHEET NAME	SHEET NUMBER
LANDSCAPE PLAN	C10

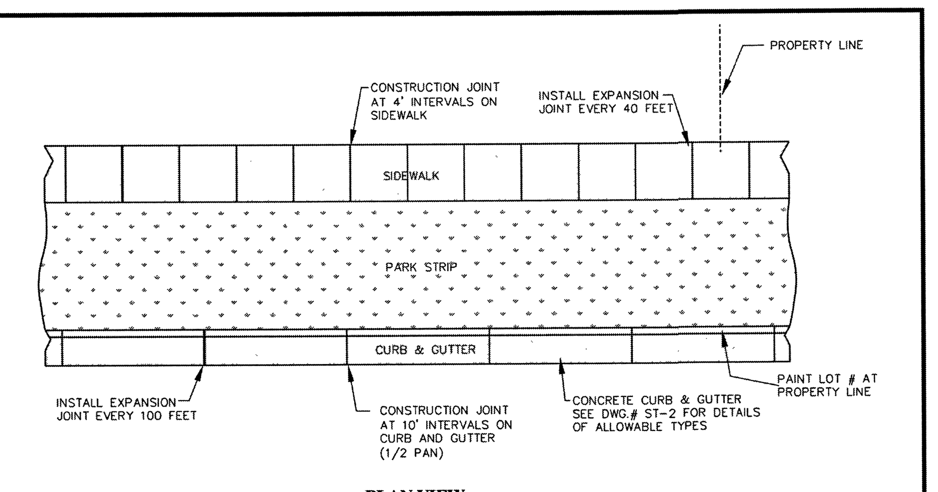

PLAN VIEW

NOTES:

1. A MINIMUM 6" DEPTH OF ROADBASE MATERIAL SHALL BE PLACED TO GRADE AND COMPACTED TO 95% OF MAXIMUM DRY DENSITY UNDER DRIVEWAY, WATERWAY, AND CURB & GUTTER PRIOR TO PLACEMENT OF CONCRETE.
2. A MINIMUM 6" DEPTH OF ROADBASE MATERIAL SHALL BE PLACED TO GRADE AND COMPACTED TO 95% OF MAXIMUM DRY DENSITY UNDER SIDEWALK AT ALL OTHER LOCATIONS PRIOR TO PLACEMENT OF CONCRETE.
3. WHERE CONSTRUCTION IS ADJACENT TO STATE HIGHWAY FRONTAGE, STATE HIGHWAY DEPARTMENT REQUIREMENTS SHALL GOVERN.
4. CONCRETE SHALL BE 3/4 INCH MAXIMUM AGGREGATE, 6.3 BAGS PER YARD OF TYPE 2 CEMENT WITH A MINIMUM COMMPRESSIVE STRENGTH OF 4,000 PSI AT 28 DAYS.
5. EXPANSION JOINTS FOR CURB & GUTTER ARE TO BE SPACED NO MORE THAN 100 FT. AND SIDEWALKS SHALL BE SPACED NO MORE THAN EVERY 40 FT. EXPANSION JOINTS SHALL BE CONSTRUCTED BY PLACING AN APPROVED MATERIAL, (TYPICALLY BITUMINOUS IMPREGNATED FIBERBOARD), THE FULL DEPTH OF THE CONCRETE. EXPANSION MATERIAL SHALL BE SET 1/2" BELOW THE FINISH LEVEL OF THE SIDEWALK.
6. CONSTRUCTION JOINT IS MADE BY SCORING THE CONCRETE WITH 1/2" RADIUS EDGING TOOL OR OTHER METHOD APPROVED BY ENGINEER.
7. SLOPE SIDEWALK TO ROADWAY AT 2% GRADE.
8. LOCATE ALL INLET GRATES 2' MINIMUM AWAY FROM THE PEDESTRIAN CROSSWALK, WITH ALL DRAINAGE INTERCEPTED BEFORE IT GETS TO THE CROSSWALK AREA.
9. THE SIDEWALK SHALL BE A MIN. 5" THICK CONCRETE.
10. IN ROCKY SUB-GRADES 18" OF BOTTOM OF TRENCH TO BOTTOM OF PIPE. MIN. OF 2' OF OUTSIDE DIAMETER.
11. INSTALL MAGNETIC DETECTOR TAPE WITH A MIN. OF 14 GAUGE COATED TRACER WIRE FOR ALL PVC OR OTHER PIPE.
12. PAINT LOT NUMBER AT PROPERTY LINE.
13. SEWER LATERAL LOCATIONS TO BE MARKED ON TOP OF CURB WITH AN S
14. CULINARY WATER LATERAL LOCATIONS TO BE MARKED ON TOP OF CURB WITH A W
15. SECONDARY WATER LATERAL LOCATIONS TO BE MARKED ON TOP OF CURB WITH AN I
16. WATER VALVE LOCATIONS TO BE MARKED ON TOP OF CURB WITH A V

SIDEWALK, CURB & GUTTER STANDARDS | DATE: APRIL 2014 | DRAWING NAME: ST-1 | DRAWN BY: ETL | CHECKED | APPROVED | REVISIONS: REV, DATE, BY, COMMENTS | SARATOGA SPRINGS CITY | 1307 N COMMERCE DR #200 SARATOGA SPRINGS UT 84045 PHONE 801-766-9793 FAX 8017669794 | STANDARD DETAILS | STREET STANDARDS | **ST-1**

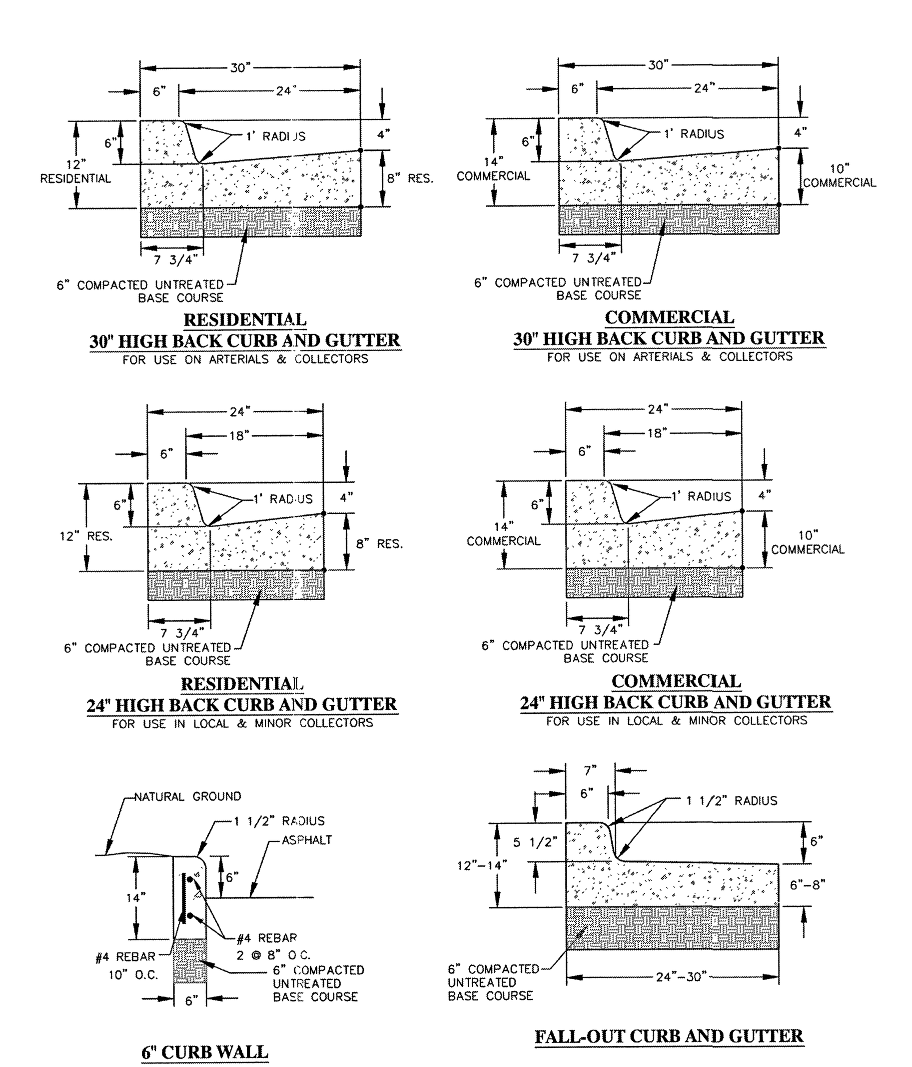

CURB & GUTTER DETAILS | DATE: APRIL 2014 | DRAWING NAME: ST-2 | SARATOGA SPRINGS CITY | STANDARD DETAILS | STREET STANDARDS | **ST-2**

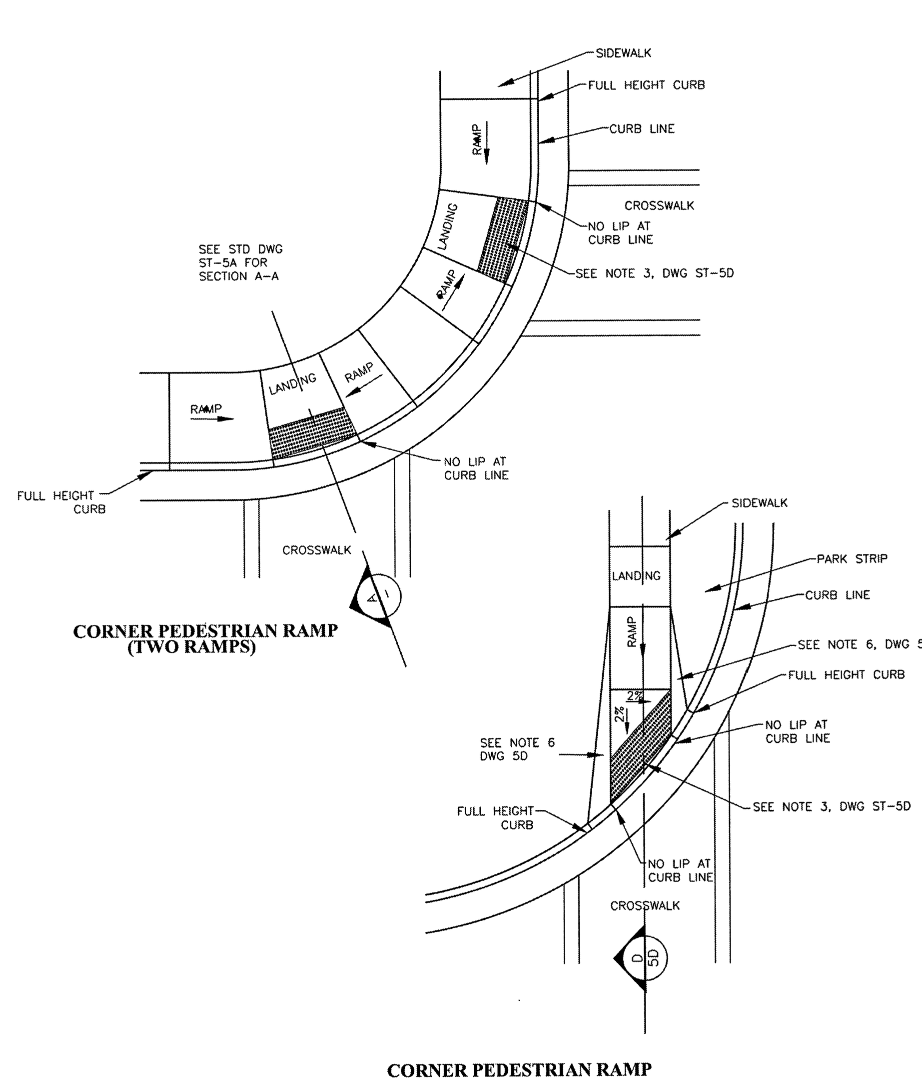

HANDICAP ACCESSIBLE RAMP | DATE: APRIL 2014 | DRAWING NAME: ST-5C | SARATOGA SPRINGS CITY | STANDARD DETAILS | STREET STANDARDS | **ST-5C**

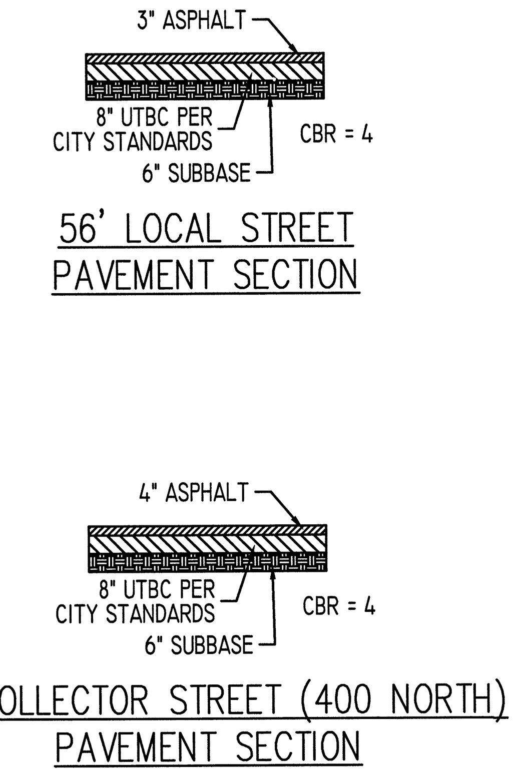

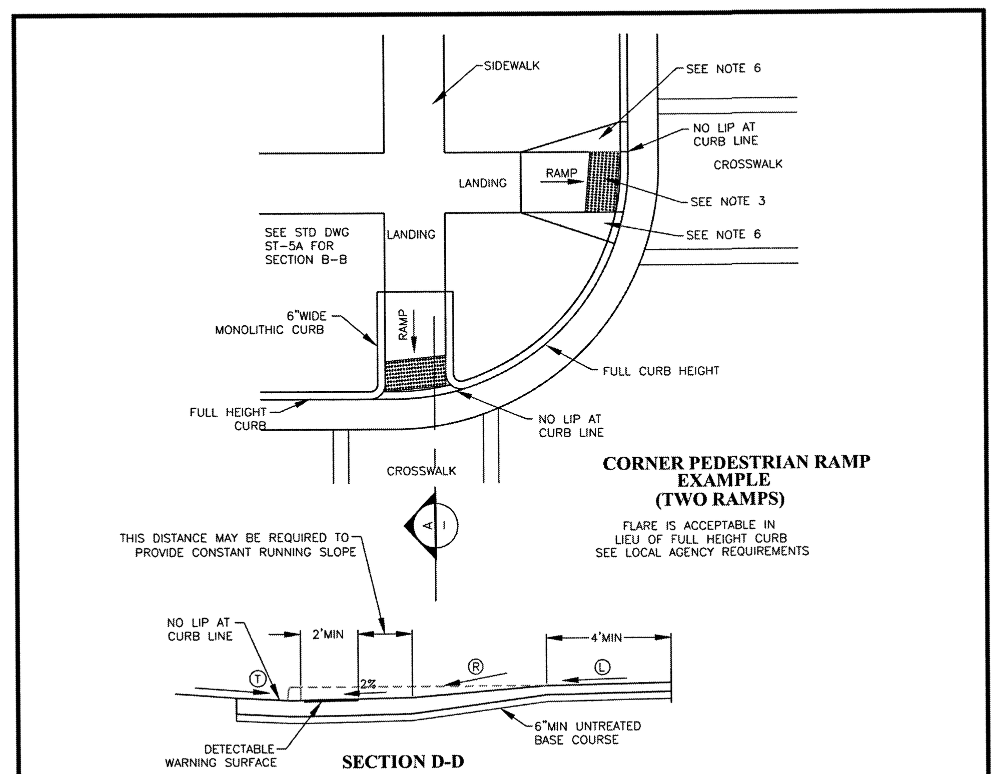

NOTES:

1. REFER TO STD DWG ST-5A FOR PEDESTRIAN ACCESS RAMP DETAIL AND SLOPE REQUIREMENTS.
2. PROVIDE DETECTABLE WARNING SURFACE FOR FULL WIDTH OF RAMP, LANDING, OR CURB CUT. SEE DETAIL A ON STD DWG ST-5A FOR DETECTABLE WARNING SURFACE DIMENSIONS.
3. LOCATE DETECTABLE WARNING SURFACE SO THAT THE EDGE NEAREST THE STREET IS 6" TO 8" FROM THE CURB LINE.
4. WHEN DETECTABLE WARNING SURFACE IS CUT, GRIND REMAINING PORTION OF ANY CUT DOMES. SEAL ALL CUT PANEL EDGES TO PREVENT WATER DAMAGE.
5. LOCATE CURB CUT WITHIN CROSSWALK.
6. WARP FLATWORK TO MATCH TOP OF CURB AND SIDEWALK.

HANDICAP ACCESSIBLE RAMP | DATE: APRIL 2014 | DRAWING NAME: ST-5D | DRAWN BY: ELT | SARATOGA SPRINGS CITY | STANDARD DETAILS | STREET STANDARDS | **ST-5D**

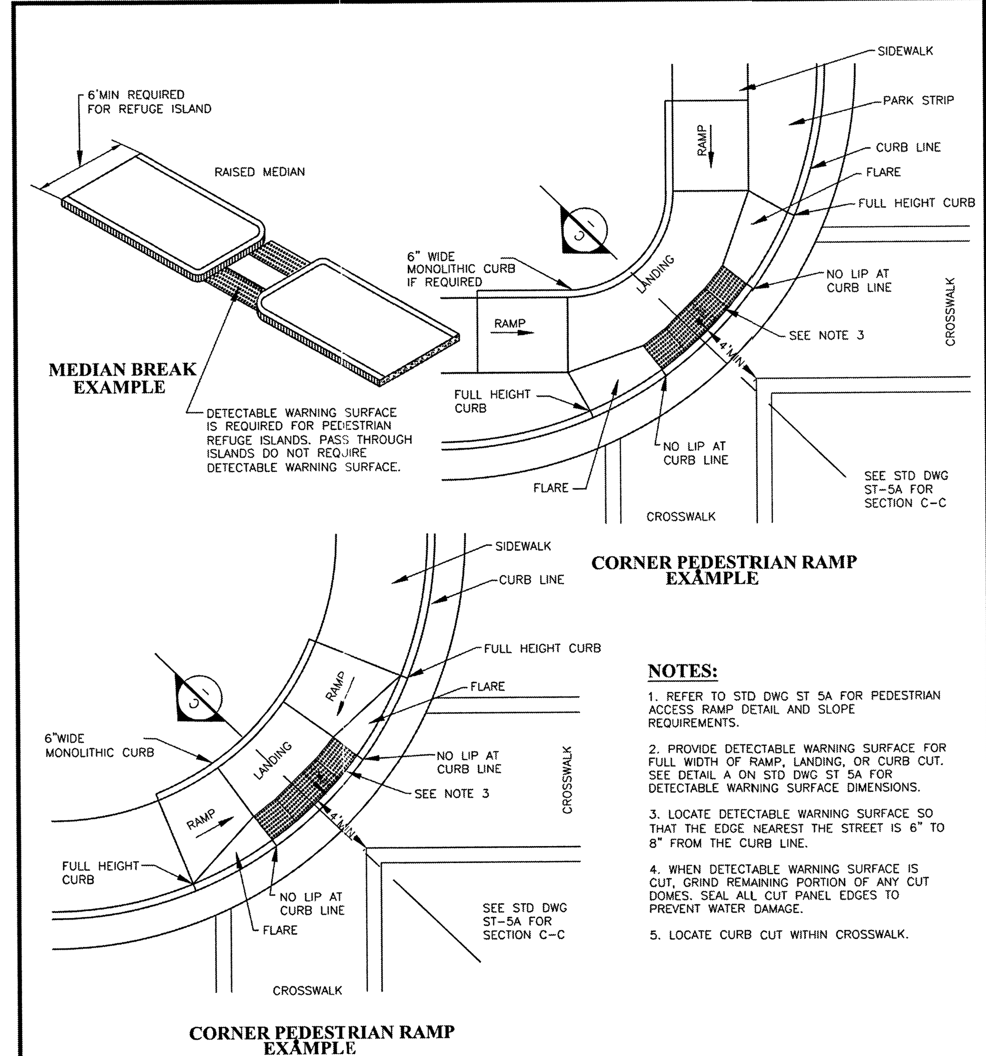

NOTES:

1. REFER TO STD DWG ST 5A FOR PEDESTRIAN ACCESS RAMP DETAIL AND SLOPE REQUIREMENTS.
2. PROVIDE DETECTABLE WARNING SURFACE FOR FULL WIDTH OF RAMP, LANDING, OR CURB CUT. SEE DETAIL A ON STD DWG ST 5A FOR DETECTABLE WARNING SURFACE DIMENSIONS.
3. LOCATE DETECTABLE WARNING SURFACE SO THAT THE EDGE NEAREST THE STREET IS 6" TO 8" FROM THE CURB LINE.
4. WHEN DETECTABLE WARNING SURFACE IS CUT, GRIND REMAINING PORTION OF ANY CUT DOMES. SEAL ALL CUT PANEL EDGES TO PREVENT WATER DAMAGE.
5. LOCATE CURB CUT WITHIN CROSSWALK.

HANDICAP ACCESSIBLE RAMP | DATE: APRIL 2014 | DRAWING NAME: ST-5E | SARATOGA SPRINGS CITY | STANDARD DETAILS | STREET STANDARDS | **ST-5E**

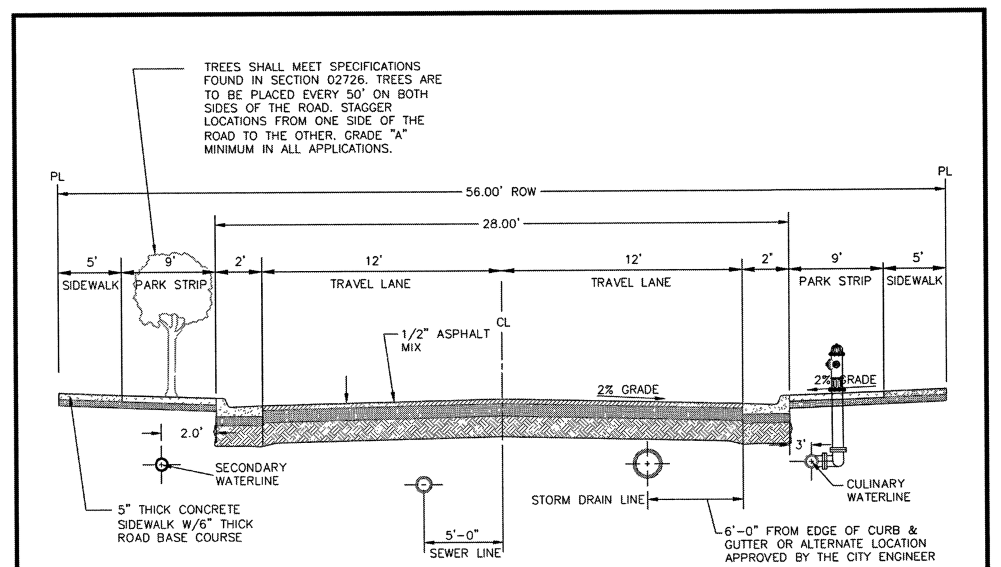

NOTES:

1. MAXIMUM DIFFERENCE IN ELEVATION BETWEEN CURB ON OPPOSITE SIDES OF STREET SHALL NOT EXCEED 1'-0"
2. PAVEMENT DESIGN MAY BE AS RECOMMENDED BY A SOILS REPORT AND A GEOTECHNICAL ENGINEER, AND AS APPROVED BY CITY ENGINEER. LOCATION OF SIDEWALK AND CURB & GUTTER MAY VARY ON INDIVIDUAL ARTERIAL STREETS PER DIRECTION OF CITY ENGINEER.
3. ALL RESIDENTIAL STREETS SHALL CONFORM TO THE CROSS-SECTION DRAWING ABOVE UNLESS APPROVED OTHERWISE BY THE CITY ENGINEER.
4. PROVIDE A MINIMUM 6" THICKNESS OF 3/4" OR 1" CRUSHED GRAVEL BASE COURSE UNDER SIDEWALKS, DRIVEWAY APPROACHES, AND CURB & GUTTER.
5. INSTALL TYPE 2 SLURRY SEAL.
6. HOUSES MAY FRONT ON THESE STREETS.
7. THIS ROW CROSS SECTION SHALL BE PERMITTED FOR PRIVATE ROAD CROSS SECTIONS IN THE FOLLOWING ZONES: R-2, R-3 AND R-4.

DESIGN CRITERIA

DESIGN SPEED: 25 M.P.H.

MIN CENTERLINE RADIUS: 200' MIN. UNLESS APPROVED OTHERWISE BY CITY ENGINEER.

VERTICAL CURVE REQUIREMENTS: SAG K VALUE = 37

CREST K VALUE = 20

RESIDENTIAL ROADWAY 56' RIGHT-OF-WAY | DATE: APRIL 2014 | DRAWING NAME: ST-8 | DRAWN BY: ETL | SARATOGA SPRINGS CITY | STANDARD DETAILS | STREET STANDARDS | **ST-8**

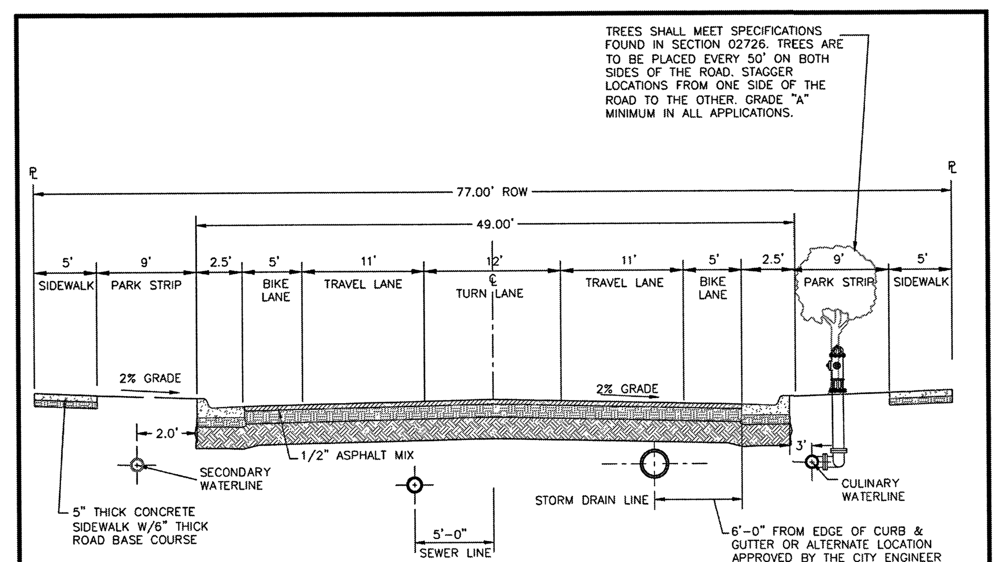

NOTES:

1. MAXIMUM DIFFERENCE IN ELEVATION BETWEEN CURB ON OPPOSITE SIDES OF STREET SHALL NOT EXCEED 1'-0"
2. PAVEMENT DESIGN SHALL BE AS RECOMMENDED BY A SOILS REPORT AND A GEOTECHNICAL ENGINEER, AND AS APPROVED BY CITY ENGINEER.
3. ALL COLLECTORS SHALL CONFORM TO THE CROSS-SECTION DRAWING ABOVE UNLESS APPROVED OTHERWISE BY THE CITY ENGINEER.
4. PROVIDE A MINIMUM 6" THICKNESS OF 3/4" OR 1" CRUSHED GRAVEL BASE COURSE UNDER SIDEWALKS, DRIVEWAY APPROACHES, AND CURB & GUTTER.
5. INSTALL TYPE 2 SLURRY SEAL.
6. HOUSES ARE DISCOURAGED FROM FRONTING ON THESE STREETS.

DESIGN CRITERIA

DESIGN SPEED: 30 M.P.H.

MIN CENTERLINE RADIUS: 300' MIN. UNLESS APPROVED OTHERWISE BY CITY ENGINEER.

VERTICAL CURVE REQUIREMENTS: SAG K VALUE = 49

CREST K VALUE = 29

COLLECTOR 77' RIGHT OF WAY | DATE: APRIL 2014 | DRAWING NAME: ST-9 | SARATOGA SPRINGS CITY | STANDARD DETAILS | STREET STANDARDS | **ST-9**

DEVELOPER

SIERRA ESTATES PLAT "D"

DEVELOPER

PATTERSON HOMES
www.phutah.com
11038 N. Highland Blvd Suite 100
Highland, UT 84003
(801) 642-0119

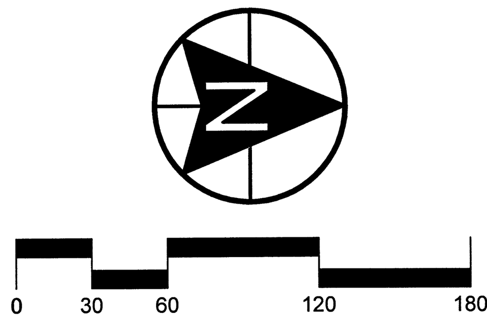

berg
CIVIL ENGINEERING
11038 N Highland Blvd Suite 400
Highland Ut, 84003
office (801) 492-1277
cell (801) 616-1677

REVISIONS			SEAL
NO.	DATE	DESCRIPTION	
1			
2			
3			
4			
5			
6			
7			

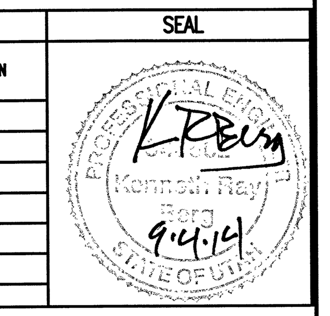

ACTION	DATE
FINAL PLAN	7/17/14

PROJECT

SIERRA ESTATES PLAT "D"

DESCRIPTION

FINAL CONSTRUCTION PLAN

CONSTRUCTION DETAILS

SHEET NAME	SHEET NUMBER
STREET DETAILS	D1

Z:\2014\SIERRA ESTATES\FINAL PLAT D\SE_PLAT D_D1.DWG

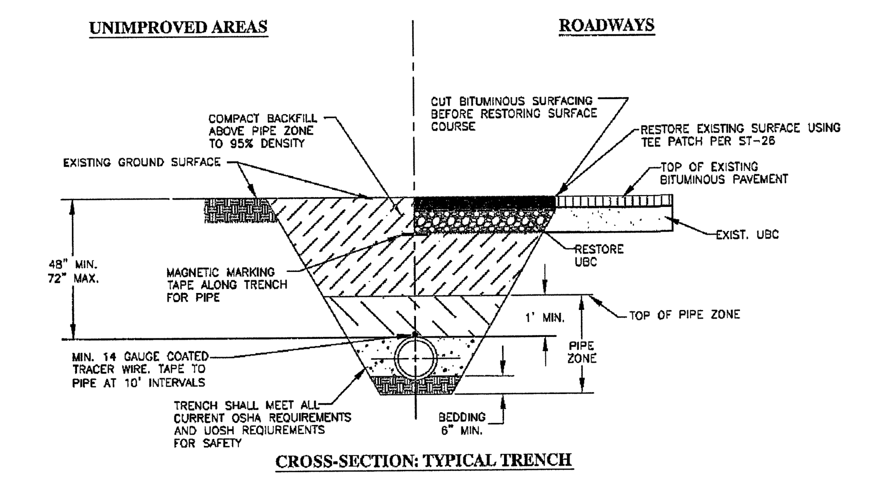

CROSS-SECTION: TYPICAL TRENCH

NOTES:

1. WATER LINES 12 INCHES AND LARGER SHALL BE DUCTILE IRON CLASS-51.
2. WATER LINES 10 INCHES AND SMALLER SHALL BE PVC AWWA C900 CLASS 200.
3. VALVES 12 INCHES AND LARGER SHALL BE BUTTERFLY VALVES.
4. WHENEVER POSSIBLE "HOT TAP" CONNECTIONS REQUIRED. HOT TAP VALVE TO BE SUPPORTED DURING CONNECTION. CONTRACTOR TO NOTIFY CITY 24 HOURS IN ADVANCE OF MAKING CONNECTION.
5. PIPE ZONE SHALL BE BACKFILLED WITH BEDDING MATERIAL, OR OTHER ACCEPTABLE MATERIAL.
6. TRACING WIRE TO BE BROUGHT OUTSIDE OF BOTTOM PORTION OF VALVE BOX AND INSIDE TOP TO SURFACE.
7. FURNISH AND INSTALL POLY-WRAP ON DUCTILE IRON PIPE.
8. WHERE COLLAPSIBLE SOILS ARE ENCOUNTERED, FURNISH, PLACE AND COMPACT IMPORTED BACKFILL MATERIALS AS REQUIRED AND AS DIRECTED.

CONSTRUCTION NOTES:

1. THE CONTRACTOR SHALL BE RESPONSIBLE FOR MEETING ALL OF THE REQUIREMENTS ESTABLISHED FOR SAFE TRENCHING. (SEE OSHA AND UOSH REQUIREMENTS, LATEST EDITIONS).
2. MINIMUM COVER OVER TOP OF PIPE SHALL BE 48-INCHES BELOW THE FINISHED GRADE. THIS DEPTH MAY BE INCREASED AS REQUIRED TO MISS UNDERGROUND UTILITIES, STORM DRAINS, OR OTHER OBSTRUCTIONS, OR WHERE INDICATED ON THE DRAWINGS.
3. CONTRACTOR SHALL LOCATE ALL UNDERGROUND UTILITIES BEFORE LAYING PIPE WITHIN 200 FEET OF UTILITY CROSSINGS SHOWN ON THE DRAWINGS, OR AS "BLUE-STAKED."
4. SEWER MAINS, WATER MAINS, GAS MAINS AND OTHER UTILITIES ARE SHOWN ON THE PLANS IN A GENERAL SCHEMATIC WAY ACCORDING TO INFORMATION RECEIVED FROM OTHERS AND SOMETIMES FROM FIELD MEASUREMENTS. THE ACCURACY OR COMPLETENESS OF THE LOCATIONS SHOWN IS NOT GUARANTEED. THE CONTRACTOR SHALL DETERMINE THE ACTUAL LOCATION OF EXISTING SERVICE CONNECTIONS AND UTILITIES AND TAKE THE NECESSARY STEPS TO AVOID THEM.
5. ANY DAMAGE TO EXISTING UTILITIES SHALL BE REPAIRED AT THE CONTRACTOR'S SOLE EXPENSE.
6. THE CONTRACTOR MAY, AT HIS DISCRETION, USE SLOPING WALLS IN UNIMPROVED TERRAIN.

CULINARY WATERLINE TRENCH

DATE: APRIL 2014
DRAWING NAME: CW-1
DRAWN BY: ETL
CHECKED: APPROVED:
REVISIONS — REV | DATE | BY | COMMENTS
SARATOGA SPRINGS CITY — 1307 N. COMMERCE DR. #200, SARATOGA SPRINGS, UT 84045 PHONE: 801-766-9793 FAX: 8017669794
STANDARD DETAILS
CULINARY WATER
CW-1

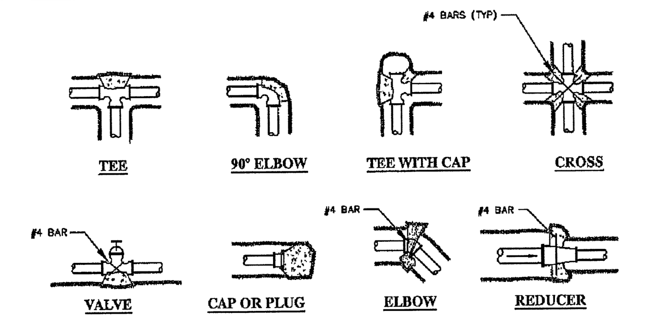

SAFE BEARING LOADS

SOIL TYPE	SAFE BEARING LOAD (lb/ft²)
SAND	1000
SAND & GRAVEL	1500
SAND & GRAVEL CEMENTED WITH CLAY	2000
SHALE	5000

SAFE BEARING LOAD FORMULA

THRUST BLOCK AREA AGAINST TRENCH WALL (SQUARE FEET) = THRUST ON FITTING / SAFE BEARING LOAD OF SOIL

NOTES:

1. REINFORCING BARS SHALL BE EPOXY COATED
2. RESIDENT PROJECT ENGINEER WILL CALCULATE QUANTITIES OF CONCRETE REQ'D AND SPECIFY PLACEMENT METHODS & REQUIREMENTS; WHICH SHALL BE APPROVED BY CITY ENGINEER
3. CONCRETE SHALL BE 4000 PSI MIN.
4. POUR CONCRETE AGAINST UNDISTURBED SOIL

THRUST ON FITTINGS

POUNDS @ 1 POUND PER SQUARE INCH OF WATER PRESSURE*

PIPE SIZE	TEES/ PLUGS	90° BENDS	45° BENDS	22.5° BENDS
4"	18.5	26.1	14.2	7.2
6"	38	53.7	29.1	14.7
8"	65.8	93	50.4	25.5
10"	107.5	152	82.4	41.7
12"	153.1	216.4	117.2	59.4
14"	215.5	304.7	164.9	84
16"	281.5	398.1	215.4	109.8
18"	356.3	503.8	272 6	139
20"	439.8	622	336.6	171.6
24"	633.3	895.6	484.7	247.1

*MULTIPLY THRUST BY MAXIMUM WATER PRESSURE

*PIPE SIZES LARGER THAN 24" SHALL BE THRUST BLOCKED AS PER ENGINEER RECOMMENDATION

THRUST BLOCK AREA AGAINST TRENCH WALL (SQUARE FEET)

ASSUMING SAND AND MAX PRESSURE OF 150 PSI SIZE MAY BE REDUCED WITH AN ENGINEERED SUBMITTAL AND AS APPROVED BY THE CITY ENGINEER

PIPE SIZE	TEES/ PLUGS	90° BENDS	45° BENDS	22.5° BENDS
4"	2.8	3.9	2.1	1.1
6"	5.7	8.1	4.4	2.2
8"	9.9	14.0	7.6	3.8
10"	16.1	22.8	12.4	6.3
12"	23.0	32.5	17.6	8.9
14"	32.3	45.7	24.7	12.6
16"	42.2	59.7	32.3	16.5
18"	53.4	75.6	40.9	20.9
20"	66.0	93.3	50.5	25.7
24"	95.0	134.3	72.7	37.1

CONCRETE THRUST BLOCKS

DATE: APRIL 2014
DRAWING NAME: CW-2
DRAWN BY: ETL
CHECKED: APPROVED:
REVISIONS — REV | DATE | BY | COMMENTS
SARATOGA SPRINGS CITY — 1307 N COMMERCE DR. #200, SARATOGA SPRINGS, UT 84045 PHONE 801-766-9793 FAX 8017669794
STANDARD DETAILS
CULINARY WATER
CW-2

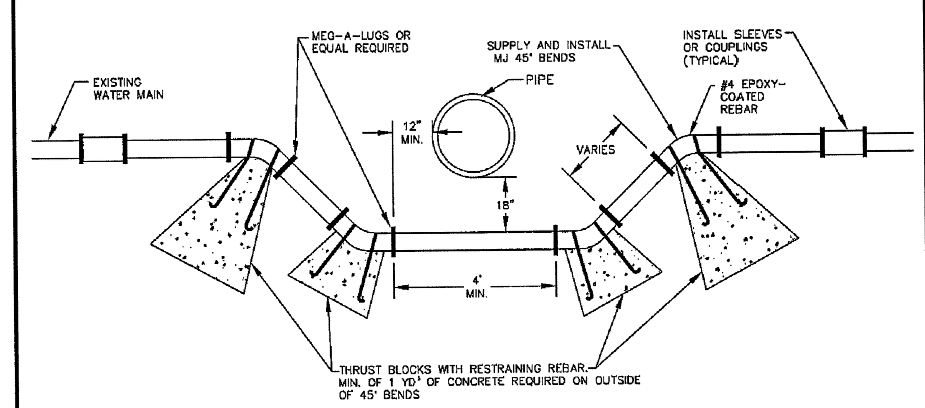

NOTES:

1. CITY TO BE GIVEN 72 HOUR NOTICE BEFORE LOOPING ANY WATERLINE WHEN SHUT OFF IS REQUIRED
2. A CASE OR SLEEVE IS REQUIRED WHEN CROSSING CULINARY WATER UNDER SANITARY AND STORM SEWER.
3. ENGINEER SHALL DETERMINE # AND LOCATION OF RESTRAINTS.

CULINARY WATERLINE LOOP

DATE: APRIL 2014
DRAWING NAME: CW-3
DRAWN BY: ETL
CHECKED: APPROVED:
REVISIONS — REV | DATE | BY | COMMENTS
SARATOGA SPRINGS CITY
STANDARD DETAILS
CULINARY WATER
CW-3

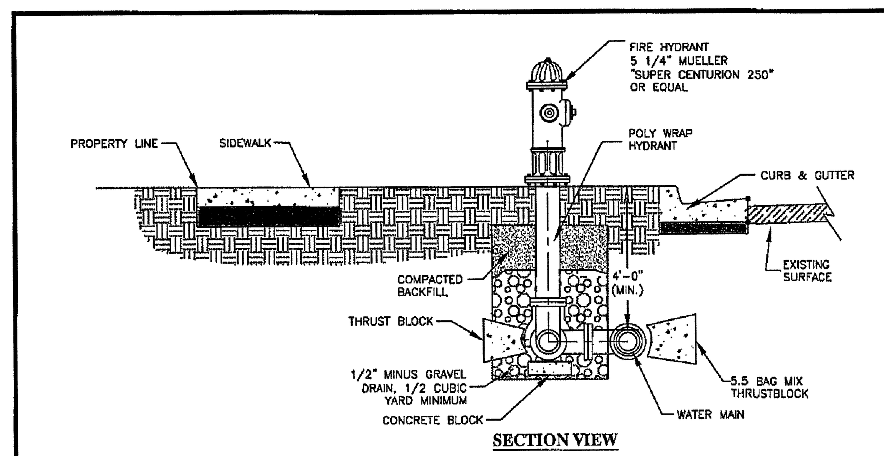

SECTION VIEW

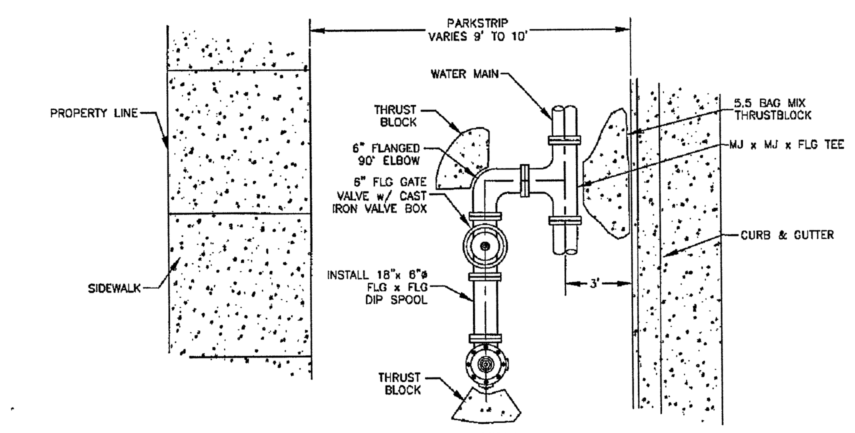

PLAN VIEW

NOTES:

1. HYDRANT SHALL BE "TRAFFIC" TYPE WITH A REPLACEABLE BREAK-AWAY UNIT IMMEDIATELY ABOVE GROUND.
2. HYDRANT SHALL BE CENTERED IN A CONCRETE PAD.

FIRE HYDRANT CONNECTION

DATE: APRIL 2014
DRAWING NAME: CW-4
DRAWN BY: ETL
CHECKED: APPROVED:
REVISIONS — REV | DATE | BY | COMMENTS
SARATOGA SPRINGS CITY — 1307 N. COMMERCE DR #200, SARATOGA SPRINGS, UT 84045 PHONE: 801-766-9793 FAX: 8017669794
STANDARD DETAILS
CUILINARY WATER
CW-4

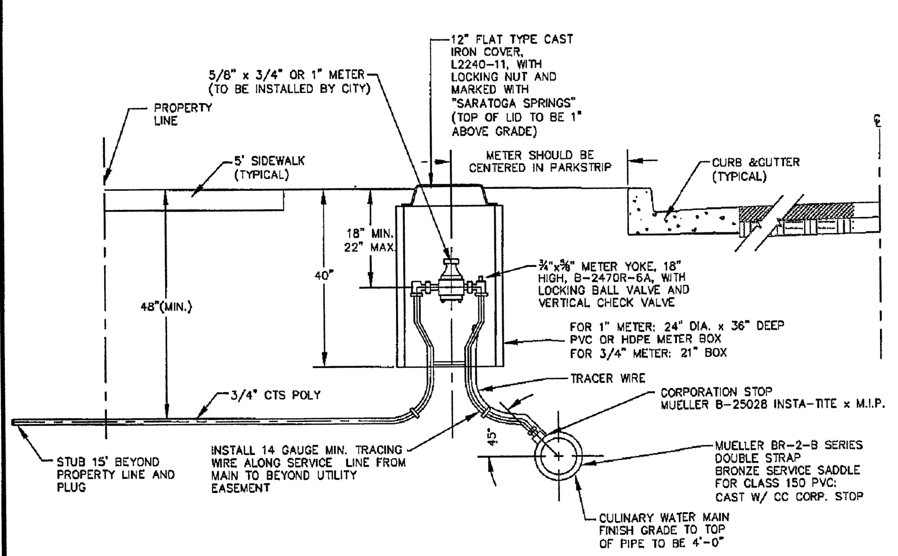

NOTES:

1. INSPECTION: METER BOX AND SERVICE LINE SHALL BE INSPECTED BY CITY PRIOR TO BACKFILLING.
2. BACKFILL: INSTALL BACKFILL IN LIFTS NOT EXCEEDING 8" AFTER COMPACTION. COMPACT EACH LIFT TO AN AVERAGE DRY DENSITY OF 95% WITH NO DENSITY TEST RESULT LESS THAN 92%.
3. CONTRACTOR TO SUPPLY ALL MATERIALS EXCLUDING METER
4. METER BOXES SHOULD BE PVC OR HDPE.
5. PIPE: INSTALL MINIMUM 3/4" CTS POLY PIPE (SDR-9) FROM MAIN TO METER AND FROM METER TO BUILDING. MINIMUM 1" POLYETHYLENE PIPE TO BE USED IN COMMERCIAL AREAS. INSTALL TRACING WIRE FROM MAIN LINE TO METER.
6. PLACEMENT: ALL METERS ARE TO BE INSTALLED IN THE PARK STRIP, MUST BE PLACED NEAR MIDPOINT OF THE LOT, AND MUST NOT BE LOCATED IN A DRIVEWAY OR IN A SIDEWALK.
7. METER YOKE TO BE MUELLER B-2470R-6A, OR ACCEPTABLE EQUAL
9. SERVICE SADDLES SHALL BE MUELLER BR-2-B SERIES, OR EQUAL
11. METER LID TO BE 1" ABOVE LINE GRADE OF WALK/CURB
12. STAINLESS STEEL LINER INSERTS WILL BE REQUIRED INSIDE OF TUBING AT COMPRESSION FITTINGS.
13. WATER SERVICES SHALL BE STUBBED TO A POINT APPROXIMATELY 1' BEYOND UTILITY EASEMENT (PUE).
14. 1" METER INSTALLATION TO BE SIMILAR USING 1" METER, PIPE, AND FITTINGS.

RESIDENTIAL METER CONNECTION 3/4" x 5/8" OR 1"

DATE: APRIL 2014
DRAWING NAME: CW-5
DRAWN BY: ETL
CHECKED: APPROVED:
REVISIONS — REV | DATE | BY | COMMENTS
SARATOGA SPRINGS CITY — 1307 N. COMMERCE DR. #200, SARATOGA SPRINGS, UT 84045 PHONE: 801-766-9793 FAX: 8017669794
STANDARD DETAILS
CULINARY WATER
CW-5

DEVELOPER

SIERRA ESTATES PLAT "D"

DEVELOPER

PATTERSON HOMES
www.phutah.com
11038 N. Highland Blvd Suite 100
Highland, UT 84003
(801) 642-0119

0 30 60 120 180
SCALE: 1"= 60'

berg
CIVIL ENGINEERING
11038 N Highland Blvd Suite 400
Highland Ut. 84003
office (801) 492-1277
cell (801) 616-1677

REVISIONS			SEAL
NO.	DATE	DESCRIPTION	
1			
2			
3			
4			
5			
6			
7			

ACTION	DATE
FINAL PLAN	7/17/14

PROJECT

SIERRA ESTATES PLAT "D"

DESCRIPTION

FINAL CONSTRUCTION PLAN

CONSTRUCTION DETAILS

SHEET NAME	SHEET NUMBER
STREET DETAILS	D2

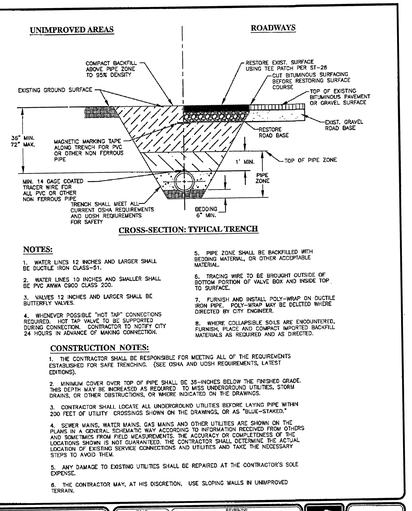

CROSS-SECTION: TYPICAL TRENCH

NOTES:

1. WATER LINES 12 INCHES AND LARGER SHALL BE DUCTILE IRON CLASS-51.
2. WATER LINES 10 INCHES AND SMALLER SHALL BE PVC AWWA C900 CLASS 200.
3. VALVES 12 INCHES AND LARGER SHALL BE BUTTERFLY VALVES.
4. WHENEVER POSSIBLE "HOT TAP" CONNECTIONS REQUIRED. HOT TAP VALVE TO BE SUPPORTED DURING CONNECTION. CONTRACTOR TO NOTIFY CITY 24 HOURS IN ADVANCE OF MAKING CONNECTION.
5. PIPE ZONE SHALL BE BACKFILLED WITH BEDDING MATERIAL, OR OTHER ACCEPTABLE MATERIAL.
6. TRACING WIRE TO BE BROUGHT OUTSIDE OF BOTTOM POSITION OF VALVE BOX AND INSIDE TOP TO SURFACE.
7. FURNISH AND INSTALL POLY-WRAP ON DUCTILE IRON PIPE. POLY-WRAP MAY BE DELETED WHERE DIRECTED BY CITY ENGINEER.
8. WHERE COLLAPSIBLE SOILS ARE ENCOUNTERED, FURNISH, PLACE AND COMPACT IMPORTED BACKFILL MATERIALS AS REQUIRED AND AS DIRECTED.

CONSTRUCTION NOTES:

1. THE CONTRACTOR SHALL BE RESPONSIBLE FOR MEETING ALL OF THE REQUIREMENTS ESTABLISHED FOR SAFE TRENCHING. (SEE OSHA AND UOSH REQUIREMENTS, LATEST EDITIONS).
2. MINIMUM COVER OVER TOP OF PIPE SHALL BE 36-INCHES BELOW THE FINISHED GRADE. THIS DEPTH MAY BE INCREASED AS REQUIRED TO MISS UNDERGROUND UTILITIES, STORM DRAINS, OR OTHER OBSTRUCTIONS, OR MISSING INDICATED ON THE DRAWINGS.
3. CONTRACTOR SHALL LOCATE ALL UNDERGROUND UTILITIES BEFORE LAYING PIPE WITHIN 200 FEET OF UTILITY CROSSINGS SHOWN ON THE DRAWINGS, OR AS "BLUE-STAKED."
4. SEWER MAINS, WATER MAINS, GAS MAINS AND OTHER UTILITIES ARE SHOWN ON THE DRAWINGS AS ADDED INFORMATION. MAY ACCORDING TO INFORMATION RECEIVED FROM OTHERS AND SOMETIMES FROM FIELD MEASUREMENTS. THE ACCURACY OR COMPLETENESS OF THE LOCATIONS SHOWN IS NOT GUARANTEED. THE CONTRACTOR SHALL DETERMINE THE ACTUAL LOCATION OF EXISTING SERVICE CONNECTIONS AND UTILITIES AND TAKE THE NECESSARY STEPS TO AVOID THEM.
5. ANY DAMAGE TO EXISTING UTILITIES SHALL BE REPAIRED AT THE CONTRACTOR'S SOLE EXPENSE.
6. THE CONTRACTOR MAY, AT HIS DISCRETION, USE SLOPING WALLS IN UNIMPROVED TERRAIN.

TRENCH DETAIL

DATE APRIL 2014 | DRAWING NAME PI-1 | DRAWN BY STL | CHECKED | APPROVED | REVISIONS NO. DATE BY CONTENTS | SARATOGA SPRINGS CITY | STANDARD DETAILS | PRESSURIZED IRR | PI-1

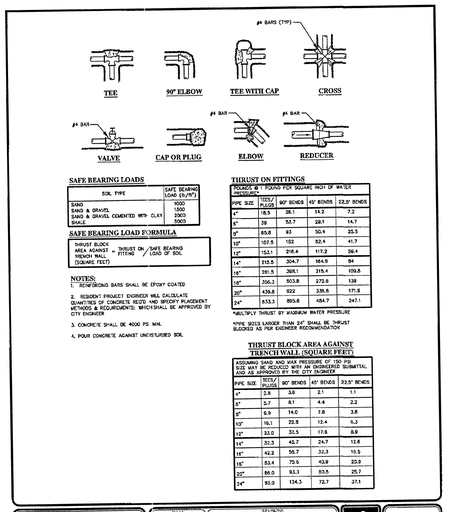

SAFE BEARING LOADS

SOIL TYPE	SAFE BEARING LOAD (lb/ft²)
SAND	1000
SAND & GRAVEL	2000
SAND & GRAVEL CEMENTED WITH CLAY	3000
SHALE	5000

SAFE BEARING LOAD FORMULA

THRUST BLOCK AREA AGAINST TRENCH WALL (SQUARE FEET) = THRUST ON FITTING / SAFE BEARING LOAD OF SOIL

NOTES:

1. REINFORCING BARS SHALL BE EPOXY COATED
2. RESIDENT PROJECT ENGINEER WILL CALCULATE QUANTITIES OF CONCRETE NEED AND SPECIFY PLACEMENT METHODS & REQUIREMENTS; WHICH SHALL BE APPROVED BY CITY ENGINEER
3. CONCRETE SHALL BE 4000 PS MIN.
4. POUR CONCRETE AGAINST UNDISTURBED SOIL

THRUST ON FITTINGS

PRESSURE @ 1 POUND PER SQUARE INCH OF WATER PRESSURE

PIPE SIZE	DEAD ENDS/ PLUGS	90° BENDS	45° BENDS	22.5° BENDS
4"	18.5	26.1	14.2	7.2
6"	39	53.7	29.1	14.7
8"	65.8	93	50.4	25.5
10"	102.5	122	82.4	41.7
12"	153.1	216.4	117.2	56.4
14"	210.5	304.7	164.9	84
16"	261.5	369.1	215.4	109.5
18"	356.3	503.8	272.8	138
20"	439.8	622	336.8	171.8
24"	633.5	895.6	484.7	247.1

*MULTIPLY THRUST BY MAXIMUM WATER PRESSURE

*PIPE SIZES LARGER THAN 24" SHALL BE THRUST BLOCKED AS PER ENGINEER RECOMMENDATION

THRUST BLOCK AREA AGAINST TRENCH WALL (SQUARE FEET)

ASSUMING SAND AND ASH PRESSURE OF 150 PSI. SIZE MAY BE REDUCED WITH AN ENGINEERED SUBMITTAL AND AS APPROVED BY THE CITY ENGINEER

PIPE SIZE	DEAD ENDS/ PLUGS	90° BENDS	45° BENDS	22.5° BENDS
4"	2.8	3.9	2.1	1.1
6"	5.7	8.1	4.4	2.2
8"	9.9	14.0	7.6	3.8
10"	16.1	22.8	12.4	6.3
12"	23.0	32.5	17.6	8.9
14"	31.3	45.7	24.7	12.6
16"	42.2	55.7	32.3	16.5
18"	53.4	75.6	40.9	20.9
20"	66.0	93.3	50.5	25.7
24"	95.0	134.3	72.7	37.1

CONCRETE THRUST BLOCKS

DATE APRIL 2014 | DRAWING NAME PI-2 | DRAWN BY STL | CHECKED | APPROVED | REVISIONS NO. DATE BY CONTENTS | SARATOGA SPRINGS CITY | STANDARD DETAILS | PRESSURIZED IRR | PI-2

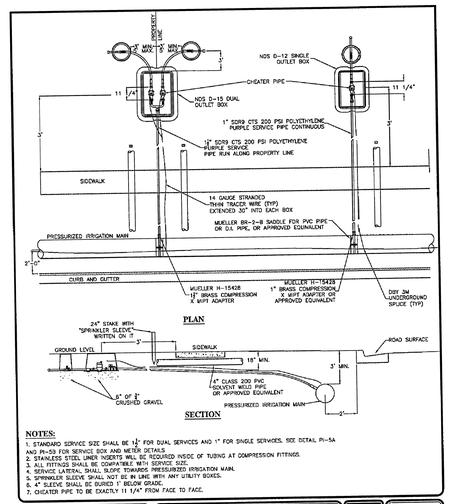

PLAN

SECTION

NOTES:

1. STANDARD SERVICE SIZE SHALL BE 1½" FOR DUAL SERVICES AND 1" FOR SINGLE SERVICES. SEE DETAIL PI-5A AND PI-5B FOR SERVICE BOX AND METER DETAILS.
2. STAINLESS STEEL LINER INSERTS WILL BE REQUIRED INSIDE OF TUBING AT COMPRESSION FITTINGS.
3. ALL FITTINGS SHALL BE COMPATIBLE WITH SERVICE SIZE.
4. SERVICE LATERAL SHALL SLOPE TOWARDS PRESSURIZED IRRIGATION MAIN.
5. SPRINKLER SLEEVE SHALL NOT BE IN LINE WITH ANY UTILITY BOXES.
6. 4" SLEEVE SHALL BE BURIED 1' BELOW GRADE.
7. CHEATER PIPE TO BE EXACTLY 11 1/4" FROM FACE TO FACE.

1" SINGLE & DUAL SERVICE LATERALS

DATE APRIL 2014 | DRAWING NAME PI-3 | DRAWN BY STL | CHECKED | APPROVED | REVISIONS NO. DATE BY CONTENTS | SARATOGA SPRINGS CITY | STANDARD DETAILS | PRESSURIZED IRR | PI-3

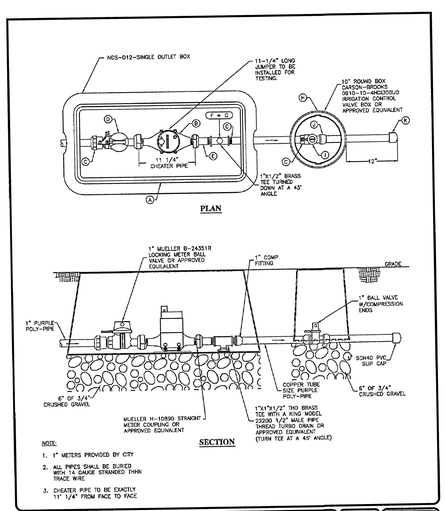

NOTE:

1. 1" METERS PROVIDED BY CITY
2. ALL PIPES SHALL BE BURIED WITH 14 GAUGE STRANDED THIN TRACE WIRE
3. CHEATER PIPE TO BE EXACTLY 11 1/4" FROM FACE TO FACE

1" SINGLE SERVICE LATERAL BOX

DATE APRIL 2014 | DRAWING NAME PI-5A | DRAWN BY STL | CHECKED | APPROVED | REVISIONS NO. DATE BY CONTENTS | SARATOGA SPRINGS CITY | STANDARD DETAILS | PRESSURIZED IRR | PI-5A

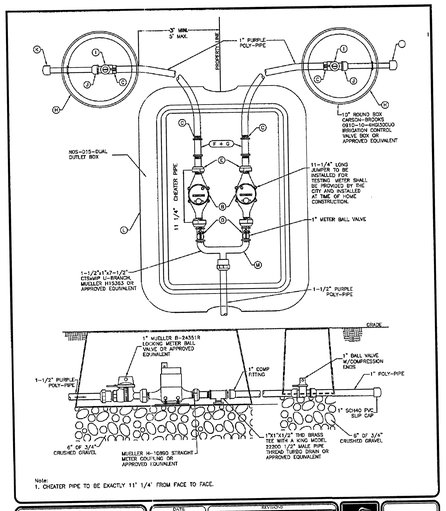

Note:
1. CHEATER PIPE TO BE EXACTLY 11' 1/4' FROM FACE TO FACE.

1 1/2" DUAL SERVICE LATERAL BOX

DATE APRIL 2014 | DRAWING NAME PI-5B | DRAWN BY | CHECKED | APPROVED | REVISIONS NO. DATE BY CONTENTS | 1. 11/14/14 JMC CHANGE PVC TO PURPLE PIPE | 2. 4-14-2014 JMC ADD NOTE REQUIRED. | SARATOGA SPRINGS CITY | STANDARD DETAILS | PRESSURIZED IRR | PI-5B

SCHEDULE OF PLUMBING MATERIAL FOR WATER METER BOXES

1" SINGLE SERVICE CONNECTION

ITEM	QUANTITY	DESCRIPTION
A	1ea	14"x19"x12" METER BOX W/ SINGLE OUTLET
B	1ea	1" METER (SUPPLIED AND INSTALLED BY CITY)
C	3ea	1" COUPLER CCT/MIPT H15428
D	1ea	1" STR BALL METER VALVE B24351R
E	1ea	1" STR METER COUPLER H10890
F	1ea	1"X1/2" BRASS TEE
G	1ea	1/2" MALE PIPE THREAD AUTO DRAIN
H	1ea	10" IRRIGATION VALVE BOX
I	1ea	1" BRASS BALL VALVE 600 WOG
J	1ea	1" MALE ADAPT SXM1PT SCH 40
K	1ea	1" SLIP CAP SHC 40

1 1/2" TO DUAL 1" SERVICE CONNECTION

ITEM	QUANTITY	DESCRIPTION
L	1ea	13"x20"x12" JUMBO METER BOX W/ DOUBLE OUTLET
B	2ea	1" METER (SUPPLIED AND INSTALLED BY CITY)
M	1ea	1.5"X7.5" CTSXMIP U-BRANCH H15363
D	2ea	1" STR BALL METER VALVE B24351R
E	2ea	1" STR METER COUPLER H10890
F	2ea	1"X1/2" BRASS TEE
G	2ea	1/2" MALE PIPE THREAD AUTO DRAIN
C	4ea	1" COUPLER CCT/MIPT H15428
I	2ea	1" BRASS BALL VALVE 600 WOG
H	2ea	10" IRRIGATION VALVE BOX
J	2ea	1" MALE ADAPT SXM1PT SCH 40
K	2ea	1" SLIP CAP SHC 40

PARTS LIST FOR SINGLE AND DUAL SERVICE LATERAL BOXES

DATE APRIL 2014 | DRAWING NAME PI-5C | DRAWN BY STL | CHECKED | APPROVED | REVISIONS NO. DATE BY CONTENTS | SARATOGA SPRINGS CITY | STANDARD DETAILS | PRESSURIZED IRR | PI-5C

DEVELOPER

SIERRA ESTATES PLAT "D"

DEVELOPER

PATTERSON HOMES
www.phutah.com
11038 N. Highland Blvd Suite 100
Highland, UT 84003
(801) 642-0119

0 30 60 120 180
SCALE: 1"= 60'

Gerg
CIVIL ENGINEERING
11038 N Highland Blvd Suite 400
Highland UT, 84003
office (801) 492-1277
cell (801) 616-1677

REVISIONS			SEAL
NO.	DATE	DESCRIPTION	
1			
2			
3			
4			
5			
6			
7			

ACTION	DATE
FINAL PLAN	7/17/14

PROJECT

SIERRA ESTATES PLAT "D"

DESCRIPTION

FINAL CONSTRUCTION PLAN

CONSTRUCTION DETAILS

SHEET NAME	SHEET NUMBER
STREET DETAILS	D3

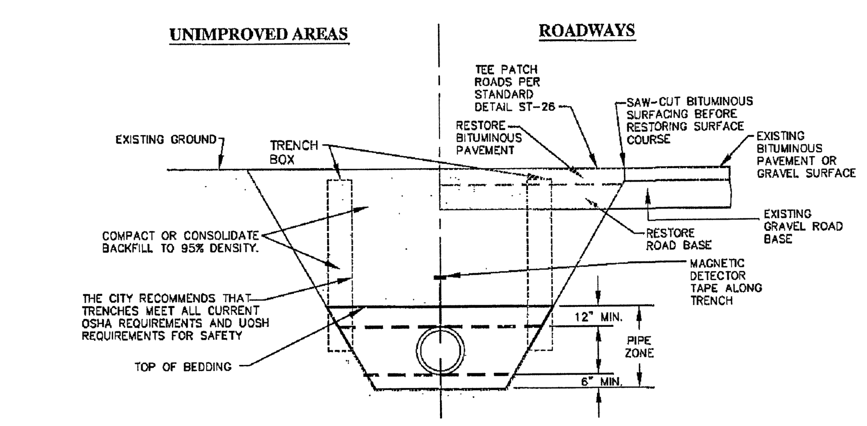

CROSS-SECTION: TYPICAL TRENCH

RECOMMENDED TRENCH QUANTITIES

PIPE DIAMETER (INCHES)		RECOMMENDED MAXIMUM TRENCH WIDTH FOR FILL IN PIPE ZONE		RECOMMENDED MAXIMUM WIDTH FOR FILL & SURFACING ABOVE PIPE ZONE MEASURED AT TOP OF TRENCH CENTERED ON PIPE	
inches	mm	inches	mm	inches	mm
4	101.6	72	1828.8	96	2438.4
6	152.4	72	1828.8	96	2438.4
8	203.2	72	1828.8	96	2438.4
10	254.0	72	1828.8	96	2438.4
12	304.8	72	1828.8	96	2438.4
15	381.0	72	1828.8	96	2438.4
18	457.2	72	1828.8	96	2438.4
21	533.4	72	1828.8	96	2438.4
24	609.6	72	1828.8	96	2438.4
30	762.0	84	2133.6	108	2743.2
36	914.4	84	2133.6	108	2743.2
42	1066.8	96	2438.4	120	3048.0
48	1219.2	96	2438.4	120	3048.0
54	1371.6	108	2743.2	132	3352.8
60	1524.0	120	3048.0	144	3657.6

NOTES:

1. THE CITY RECOMMENDS CONTRACTOR MEET ALL OF THE REQUIREMENTS ESTABLISHED FOR SAFE TRENCHING. (SEE OSHA AND UOSH REQUIREMENTS, LATEST EDITIONS).
2. CONTRACTOR SHALL LOCATE ALL UNDERGROUND UTILITIES BEFORE LAYING PIPE WITHIN 50' OF SAID UTILITIES WHICH MAY BE EXPOSED, DAMAGED OR CROSSED AS SHOWN ON THE DRAWINGS OR AS "BLUE STAKED". THE CONTRACTOR WILL MAKE ARRANGEMENTS WITH THE UTILITY COMPANY TO MOVE THE UTILITY IF NECESSARY OR OBTAIN PERMISSION FROM THE CITY ENGINEER TO MODIFY GRADE OF PIPELINE IN ORDER TO GO AROUND UTILITIES.
3. TESTING: ALL NEW SANITARY SEWERS TO BE "TELEVISED" AND NECESSARY REPAIRS MADE BEFORE ACCEPTANCE. ALL LINES SHALL BE PRESSURE TESTED TO 3.5 psi MIN. FOR 5 MINUTES. A MANDRAL OR BALL CAN BE USED TO VERIFY DEFORMATION OF A PIPE AS DETERMINED FROM THE VIDEO UNLESS SPECIFIED OTHERWISE. MANHOLES SHALL BE TESTED AS PER CITY STANDARDS.
4. ALL SEWER LINES TO BE INSTALLED IN PUBLIC RIGHT-OF-WAY OR RECORDED SEWER EASEMENT UNLESS OTHERWISE APPROVED BY THE CITY ENGINEER.
5. WHERE COLLAPSIBLE SOILS ARE ENCOUNTERED, FURNISH, PLACE AND COMPACT IMPORTED BACKFILL MATERIALS AS REQUIRED AND AS DIRECTED.
6. MIN. DEPTH SHALL BE 4' TO TOP OF PIPE. A 2' SPACING MUST BE MAINTAINED BETWEEN ALL WATER LINE PIPE CROSSINGS AND THE TOP OF THE SEWER PIPE.
7. IF THE SEWER LINE IS NOT 13' DEEP A NOTE MUST BE PLACED ON THE PLAT "SHALLOW SEWER DEPTHS. BEFORE EXCAVATING BASEMENTS, CONTRACTOR MUST VERIFY SEWER DEPTH"
8. MAX. DEPTH SHALL BE 20' TO THE TOP OF PIPE UNLESS APPROVED OTHERWISE BY THE CITY ENGINEER.
9. INSTALL MAGNETIC DETECTOR TAPE 3' ABOVE PIPE.
10. IN ROCKY SUB-GRADES A MINIMUM OF 18" CLEARANCE ON ALL SIDES OF THE PIPE SHALL BE PROVIDED.

STANDARD SEWER TRENCH — DATE: APRIL 2014 — DRAWING NAME: SS-1 — DRAWN BY: ETL — SARATOGA SPRINGS CITY — STANDARD DETAILS — SANITARY SEWER — **SS-1**

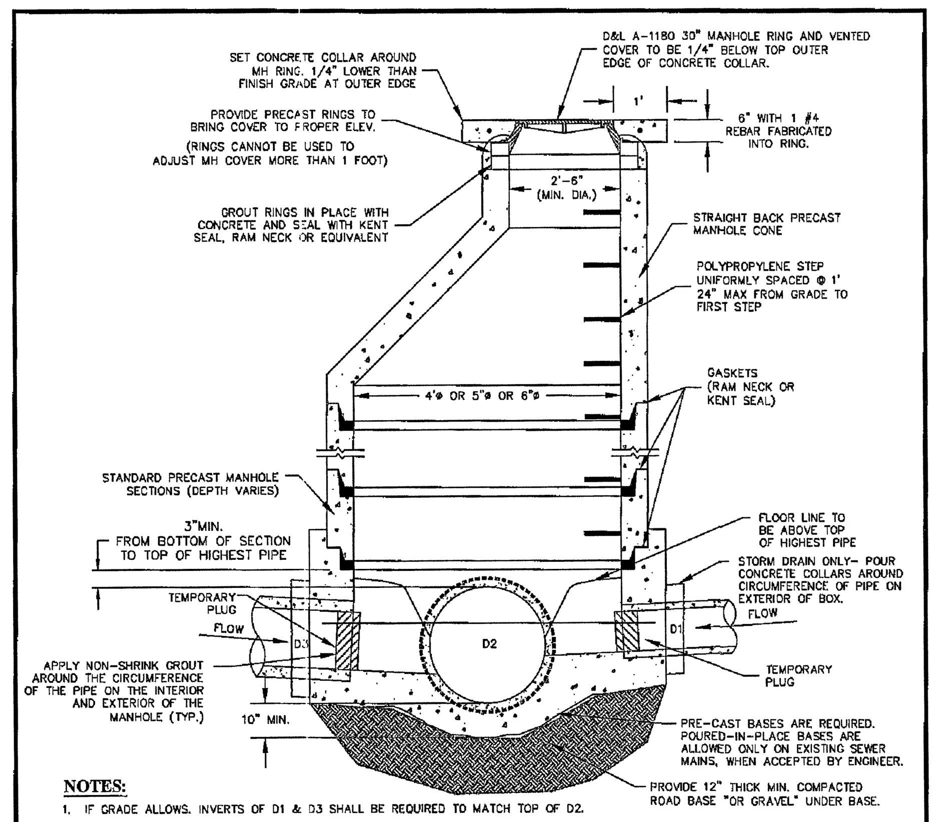

NOTES:

1. IF GRADE ALLOWS, INVERTS OF D1 & D3 SHALL BE REQUIRED TO MATCH TOP OF D2.
2. AFTER ALL GRADING AROUND MANHOLE HAS BEEN COMPLETED AND FINAL SURFACING IS IN PLACE REMOVE TEMPORARY PLUGS, DEBRIS AND PLYWOOD FROM INSIDE OF MANHOLES.
3. IF MANHOLE IS TO BE POURED IN PLACE, FOLLOW SAME PATTERN AS SHOWN EXCEPT USE 10" MIN WALL THICKNESS.
4. MANHOLES DEEPER THAN 20 FEET SHALL HAVE AN 18" THICK CONCRETE BASE.
5. CONE AND WALL SECTIONS SHALL CONFORM WITH ASTM C-478 STANDARD
6. ALL MANHOLES TO BE HS-20 RATED
7. MANHOLES WITH SOLID LIDS MUST BE EPOXY LINED.
8. MANHOLES OUTSIDE OF ROW SHALL HAVE SOLID LOCKING LIDS.
9. FLAT CAST RINGS ARE NOT PERMITTED
10. LID SHALL BE MARKED SS SEWER

SANITARY SEWER MANHOLE — DATE: APRIL 2014 — DRAWING NAME: SS-2 — DRAWN BY: ETL — SARATOGA SPRINGS CITY — STANDARD DETAILS — SANITARY SEWER — **SS-2**

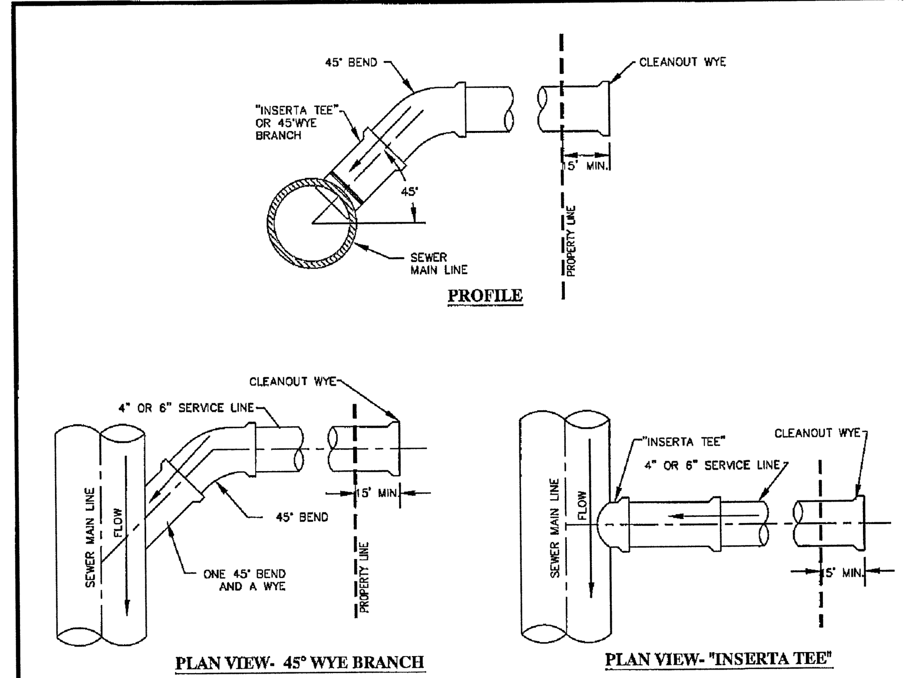

PLAN VIEW- 45° WYE BRANCH

PLAN VIEW- "INSERTA TEE"

NOTES:

1. ALL RESIDENTIAL SERVICES SHALL BE 4" DIAMETER. NON-RESIDENTIAL SHALL BE 6" DIAMETER UNLESS DIRECTED OTHERWISE AND SHALL BE EXTENDED FROM MAIN LINES TO PROPERTY LINES.
2. EVERY RESIDENTIAL UNIT SHALL HAVE A SEPARATE SEWER LATERAL.
3. MINIMUM GRADE SHALL BE 2% FOR SERVICE LINES.
4. ALL 90' BENDS AT CONNECTION TO MAIN MUST BE CONSTRUCTED WITH ONE 45° BEND AND A WYE.
5. DIRECT NOSE ON IS ALLOWED WHEN CONNECTING TO EXISTING MAIN LINE. USE RUBBER BOOT AS PER CITY WITH STAINLESS STEEL STRAPS, IF REQUIRED. CORE CUT EXISTING PIPE, DO NOT BREAK OUT WITH A HAMMER.
6. NOTIFY CITY 24 HOURS IN ADVANCE OF ANY CONNECTION. EVERY CONNECTION TO BE INSPECTED BY CITY.
7. CONNECTION TO USERS TO BE DONE BY OTHERS.
8. CAST IRON WYE'S ARE REQUIRED FOR ALL NON-RESIDENTIAL CONNECTIONS.

SEWER SERVICE CONNECTION — DATE: APRIL 2014 — DRAWING NAME: SS-3 — DRAWN BY: ETL — SARATOGA SPRINGS CITY — STANDARD DETAILS — SANITARY SEWER — **SS-3**

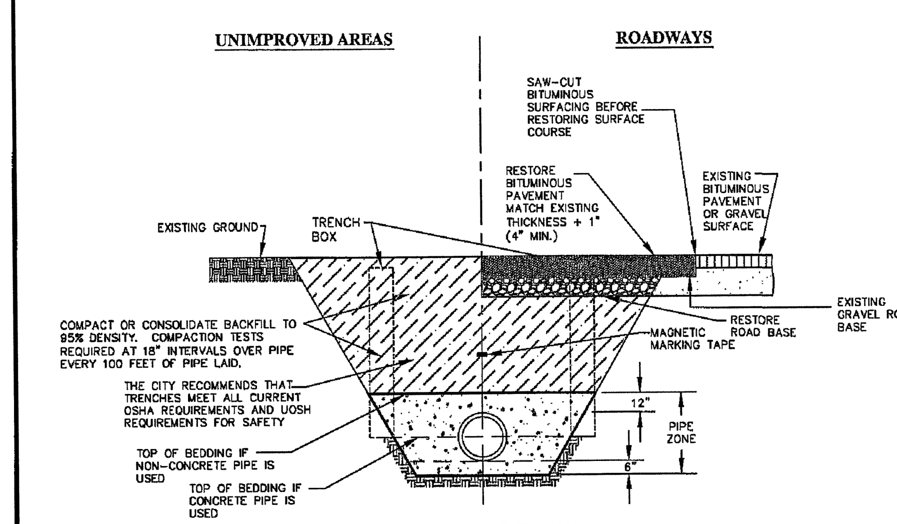

CROSS-SECTION: TYPICAL TRENCH

NOTES:

1. THE CITY RECOMMENDS CONTRACTOR MEET ALL OF THE REQUIREMENTS ESTABLISHED FOR SAFE TRENCHING. (SEE OSHA AND UOSH REQUIREMENTS, LATEST EDITIONS).
2. CONTRACTOR SHALL LOCATE ALL UNDERGROUND UTILITIES BEFORE LAYING PIPE WITHIN 50' OF SAID UTILITIES WHICH MAY BE EXPOSED, DAMAGED OR CROSSED AS SHOWN ON THE DRAWINGS OR AS "BLUE STAKED". THE CONTRACTOR WILL MAKE ARRANGEMENTS WITH THE UTILITY COMPANY TO MOVE THE UTILITY IF NECESSARY OR OBTAIN PERMISSION FROM THE CITY ENGINEER TO MODIFY GRADE OF PIPELINE IN ORDER TO GO AROUND UTILITIES.
3. TESTING: ALL STORM DRAIN LINES TO BE "VIDEOED" AND NECESSARY REPAIRS MADE BEFORE ACCEPTANCE. A MANDRAL OR BALL CAN BE USED TO VERIFY DEFORMATION OF A PIPE AS DETERMINED FROM THE VIDEO UNLESS SPECIFIED OTHERWISE.
4. ALL STORM DRAIN TO BE INSTALLED IN PUBLIC RIGHT-OF-WAY OR RECORDED DRAINAGE EASEMENT UNLESS OTHERWISE APPROVED BY THE CITY ENGINEER.
5. WHERE COLLAPSIBLE SOILS ARE ENCOUNTERED, FURNISH, PLACE AND COMPACT IMPORTED BACKFILL MATERIALS AS REQUIRED AND AS DIRECTED.
6. MIN. DEPTH OF COVER SHALL MEET MANUFACTURERS RECOMMENDATIONS.
7. IN ROCKY SUB-GRADES 18" OF CLEARANCE SHALL BE PROVIDED ON ALL SIDES OF PIPE.
8. INSTALL MAGNETIC DETECTOR TAPE 3' ABOVE PIPE IN TRENCH.

STORM DRAIN TRENCH — DATE: APRIL 2014 — DRAWING NAME: SD-1 — DRAWN BY: ETL — SARATOGA SPRINGS CITY — STANDARD DETAILS — STORM DRAIN — **SD-1**

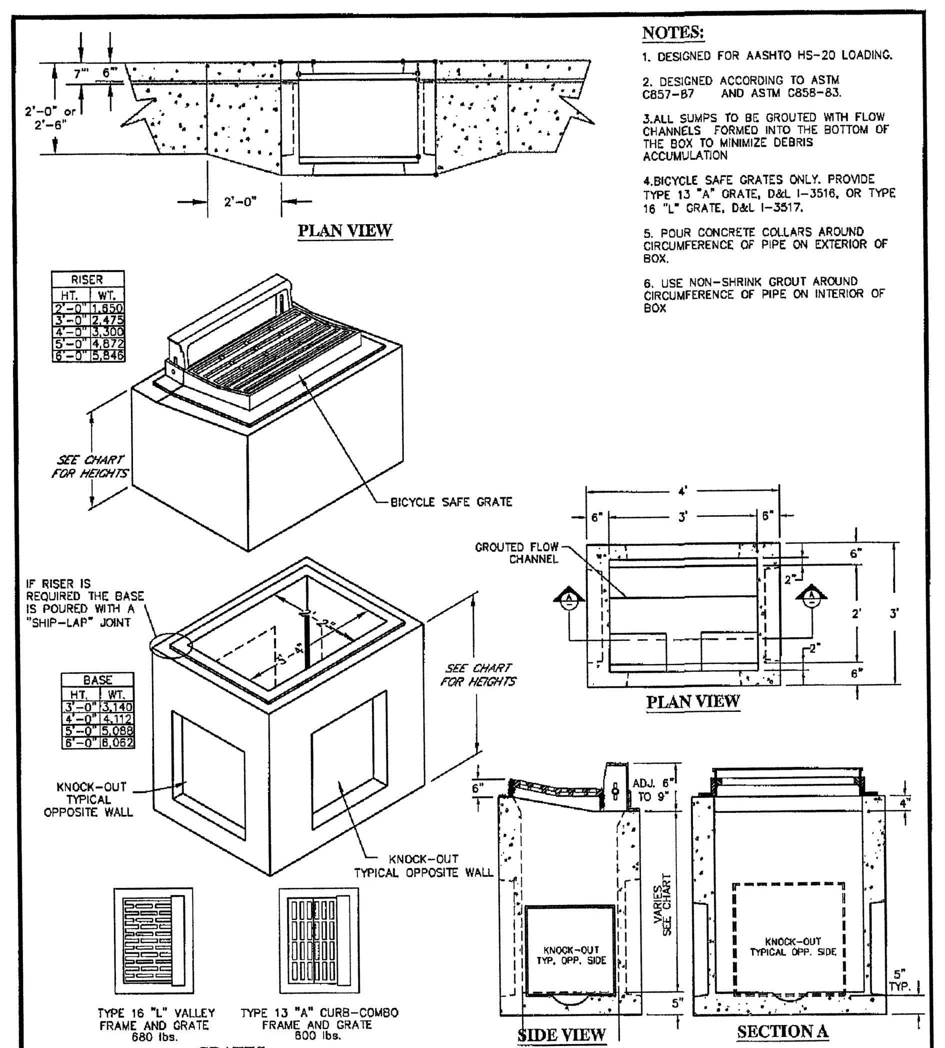

NOTES:

1. DESIGNED FOR AASHTO HS-20 LOADING.
2. DESIGNED ACCORDING TO ASTM C857-87 AND ASTM C858-83.
3. ALL SUMPS TO BE GROUTED WITH FLOW CHANNELS FORMED INTO THE BOTTOM OF THE BOX TO MINIMIZE DEBRIS ACCUMULATION
4. BICYCLE SAFE GRATES ONLY. PROVIDE TYPE 13 "A" GRATE, D&L I-3516, OR TYPE 16 "L" GRATE, D&L I-3517.
5. POUR CONCRETE COLLARS AROUND CIRCUMFERENCE OF PIPE ON EXTERIOR OF BOX.
6. USE NON-SHRINK GROUT AROUND CIRCUMFERENCE OF PIPE ON INTERIOR OF BOX

GUTTER INLET BOX — SD-2 — SARATOGA SPRINGS CITY — STANDARD DETAILS — STORM DRAIN — **SD-2**

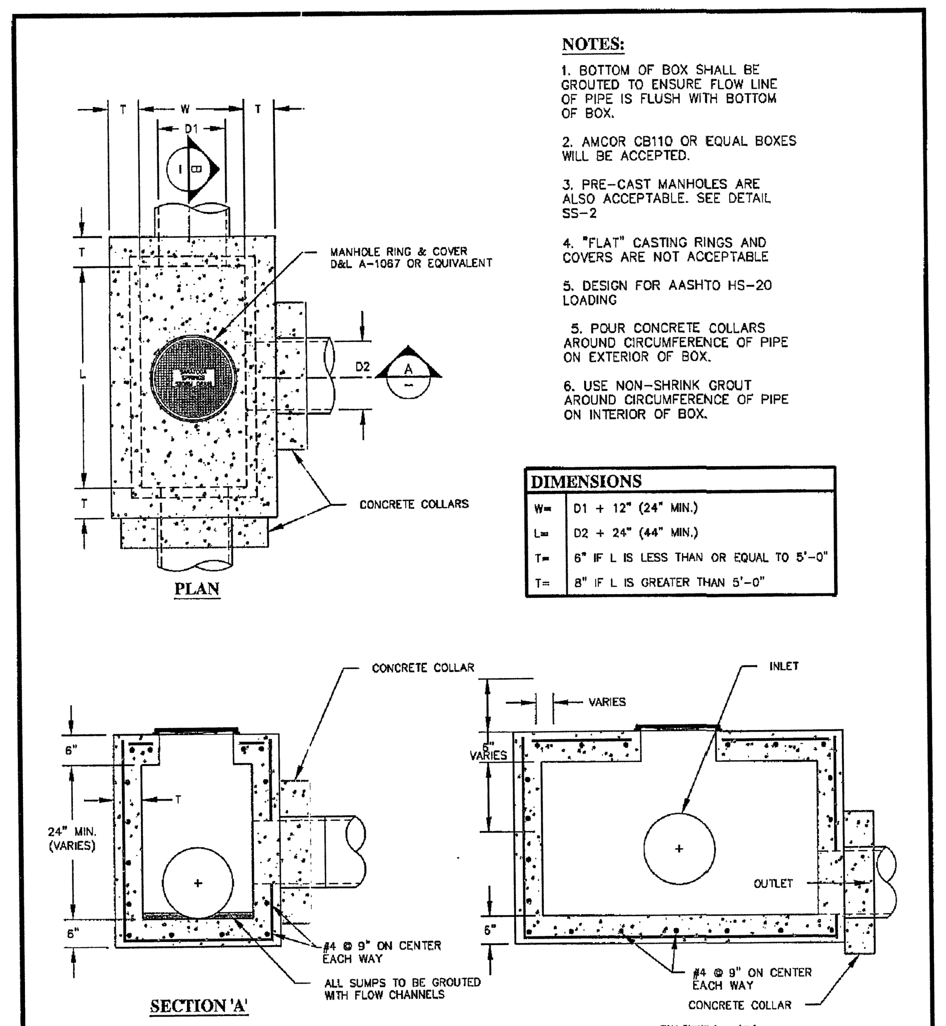

NOTES:

1. BOTTOM OF BOX SHALL BE GROUTED TO ENSURE FLOW LINE OF PIPE IS FLUSH WITH BOTTOM OF BOX.
2. AMCOR CB110 OR EQUAL BOXES WILL BE ACCEPTED.
3. PRE-CAST MANHOLES ARE ALSO ACCEPTABLE. SEE DETAIL SS-2
4. "FLAT" CASTING RINGS AND COVERS ARE NOT ACCEPTABLE
5. DESIGN FOR AASHTO HS-20 LOADING
5. POUR CONCRETE COLLARS AROUND CIRCUMFERENCE OF PIPE ON EXTERIOR OF BOX.
6. USE NON-SHRINK GROUT AROUND CIRCUMFERENCE OF PIPE ON INTERIOR OF BOX.

DIMENSIONS	
W=	D1 + 12" (24" MIN.)
L=	D2 + 24" (44" MIN.)
T=	6" IF L IS LESS THAN OR EQUAL TO 5'-0"
T=	8" IF L IS GREATER THAN 5'-0"

CLEANOUT BOX — SD-3 — SARATOGA SPRINGS CITY — STANDARD DETAILS — STORM DRAIN — **SD-3**

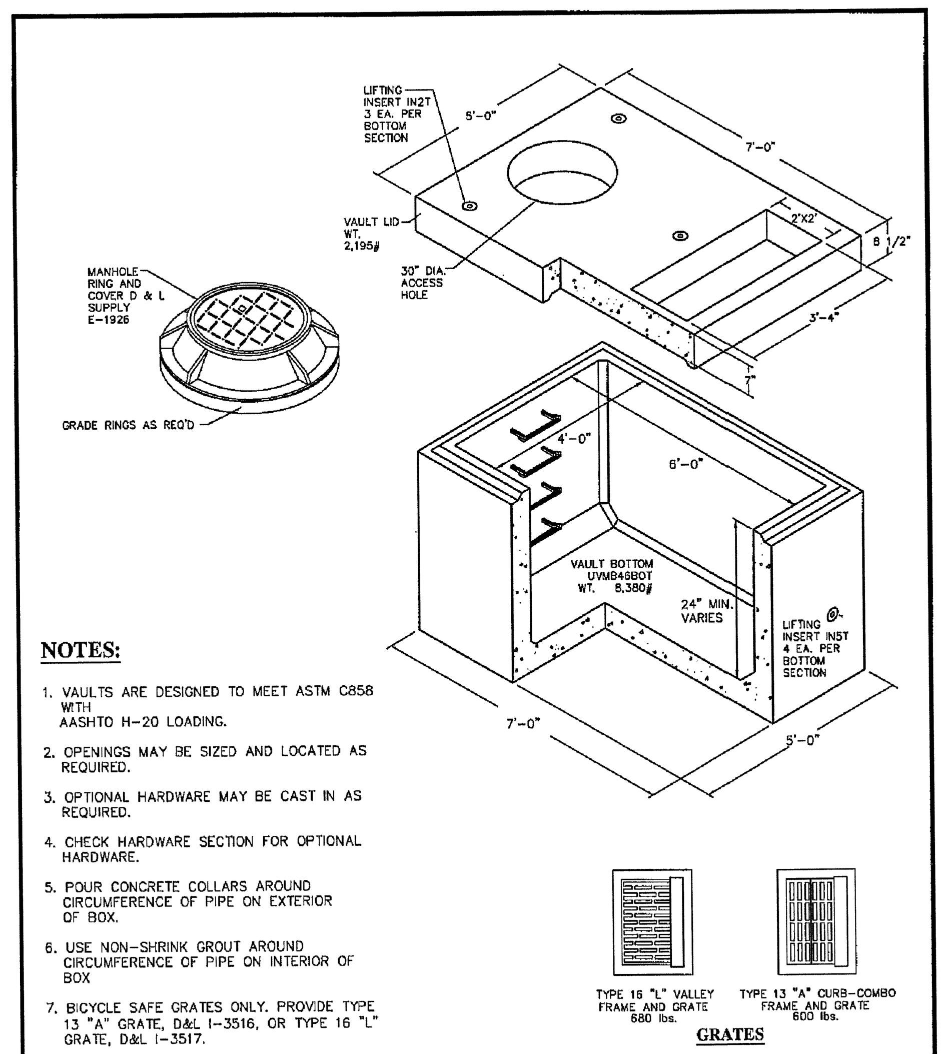

NOTES:

1. VAULTS ARE DESIGNED TO MEET ASTM C858 WITH AASHTO H-20 LOADING.
2. OPENINGS MAY BE SIZED AND LOCATED AS REQUIRED.
3. OPTIONAL HARDWARE MAY BE CAST IN AS REQUIRED.
4. CHECK HARDWARE SECTION FOR OPTIONAL HARDWARE.
5. POUR CONCRETE COLLARS AROUND CIRCUMFERENCE OF PIPE ON EXTERIOR OF BOX.
6. USE NON-SHRINK GROUT AROUND CIRCUMFERENCE OF PIPE ON INTERIOR OF BOX
7. BICYCLE SAFE GRATES ONLY. PROVIDE TYPE 13 "A" GRATE, D&L I-3516, OR TYPE 16 "L" GRATE, D&L I-3517.

COMBINATION GUTTER INLET & CLEANOUT BOX — DATE: APRIL 2014 — DRAWING NAME: SD-4 — DRAWN BY: ETL — SARATOGA SPRINGS CITY — STANDARD DETAILS — STORM DRAIN — **SD-4**

DEVELOPER

SIERRA ESTATES PLAT "D"

DEVELOPER

PATTERSON HOMES
www.phutah.com
11038 N. Highland Blvd Suite 100
Highland, UT 84003
(801) 642-0119

0 30 60 120 180
SCALE: 1"= 60'

berg
CIVIL ENGINEERING
11038 N Highland Blvd Suite 400
Highland Ut. 84003
office (801) 492-1277
cell (801) 616-1677

REVISIONS			SEAL
NO.	DATE	DESCRIPTION	
1			
2			
3			
4			
5			
6			
7			

ACTION	DATE
FINAL PLAN	7/17/14

PROJECT

SIERRA ESTATES PLAT "D"

DESCRIPTION

FINAL CONSTRUCTION PLAN

CONSTRUCTION DETAILS

SHEET NAME	SHEET NUMBER
STREET DETAILS	D4

Z:\2014\SIERRA ESTATES\FINAL PLAT D\SE_PLAT D_D4.DWG

ORDERING GUIDE LUMINAIRE:
CS-CLS274-44LED POLE
ASSEMBLY:
14ZFA-5.0-TT/3x3-16"VRG-BK

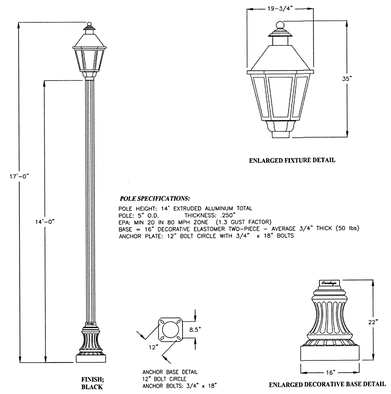

POLE SPECIFICATIONS:

POLE HEIGHT: 14' EXTRUDED ALUMINUM TOTAL
POLE: 5" O.D. THICKNESS: .250"
EPA: MIN 20 IN 80 MPH ZONE (1.3 GUST FACTOR)
BASE = 16" DECORATIVE ELASTOMER TWO-PIECE – AVERAGE 3/4" THICK (50 lbs)
ANCHOR PLATE: 12" BOLT CIRCLE WITH 3/4" x 18" BOLTS

FINISH: BLACK

14' RESIDENTIAL STREET LIGHT

DATE APRIL 2014	REVISIONS: DATE / BY / COMMENTS
DRAWING NAME LP-1	
DRAWN BY CJG	
CHECKED / APPROVED	SARATOGA SPRINGS CITY

STANDARD DETAILS — STREET LIGHTS — **LP-1**

NOTE!
IF DEPTH CANNOT BE MET MASS MUST BE EQUIVALENT TO MASS SHOWN

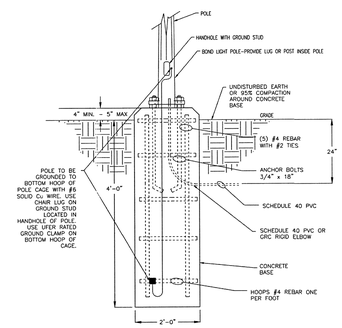

CONCRETE BASE DETAIL FOR 14' RESIDENTIAL STREET LIGHT

DATE APRIL 2014	REVISIONS: DATE / BY / COMMENTS
DRAWING NAME LP-1A	
DRAWN BY CJG	
CHECKED / APPROVED	SARATOGA SPRINGS CITY

STANDARD DETAILS — STREET LIGHTS — **LP-1A**

ORDERING GUIDE: SQ_014377
COLOR: BLACK

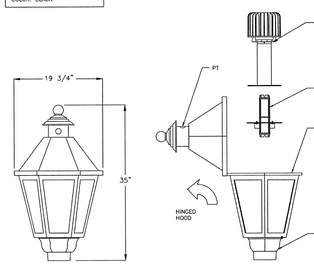

CATALOG NO: CL6274-FLAF-3L-44W-4K-120-EK1-DEP-F3AP-PT-RAL9005TX
LUMINAIRE: HEXAGONAL SHAPE
LENS/DIFFUSER: FROSTED ACRYLIC LENS
WATTAGE: 44 WATTS
LIGHT SOURCE: BOARD LED – 4000K
LINE VOLTAGE: 120 VOLTS
DRIVER: MOUNTED ON TRAY WITH QUICK RELEASE CONNECTORS
IP66 WEATHERPROOF LUMINAIRE WITH "V" GROOVE SILICONE GASKET
OPTION: TWIST LOCK PHOTOCELL PRE-INSTALLED IN DECORATIVE CUPOLA.

ALL NON ELECTRICAL HARDWARE SHALL BE STAINLESS STEEL.

COLOR & FINISH: BLACK (RAL9005TX) TEXTURED POWDER COAT
PAINT WARRANTY: 5 YEARS

RESIDENTIAL STREET LIGHT LUMINARE

DATE APRIL 2014	REVISIONS: DATE / BY / COMMENTS
DRAWING NAME LP-1B	
DRAWN BY CJG	
CHECKED / APPROVED	SARATOGA SPRINGS CITY

STANDARD DETAILS — STREET LIGHTS — **LP-1B**

NOTES:

1. STREET LIGHTS POLES SHALL BE LOCATED AT ROADWAY INTERSECTIONS (NEAR FIRE HYDRANTS WHERE POSSIBLE) AND AT OTHER REQUIRED LOCATIONS PER CITY STANDARDS.
2. POLES ON COLLECTOR STREETS SHALL HAVE FLUTED SHAFTS.
3. POLES IN SUBDIVISIONS SHALL HAVE FLUTED SHAFTS.
4. MARK JUNCTION BOX LIDS "STREET LIGHTS".
5. INSTALL 1" PVC SCH 40 CONDUIT WITH 24" COVER AND SAND BEDDING.
6. WIRES FROM RMP SOURCE TO BE SINGLE CONDUCTOR (NOT DUPLEX) #6 AWG XHHW-2 COPPER WIRE IN COLORS NOTED ON DETAIL.
7. FUSE LIVE CONDUCTOR IN JUNCTION BOX.
8. CONTRACTOR TO INSTALL JUNCTION BOX WITH FUSE. BOX TO BE LOCATED 4' MIN AND 10' MAX FEET FROM RMP SOURCE. PROVIDE 1" SCH 40 PVC CONDUIT TO RMP SOURCE. PROVIDE CONDUCTORS LONG ENOUGH TO REACH RMP POWER SOURCE PLUS 5'. CONTRACTOR SHALL SUPPLY PULL STRING IN CONDUIT.
9. CONNECT GROUND WIRE TO METAL SHELL OF LIGHT POLE.
10. FUSE ASSEMBLY SHALL BE (1) BUSSMAN HEB-JJ, WITH (2) BUSSMAN 2AQ660. NO SUBSTITUTIONS.
11. FUSE AT POLE SHALL BE BUSSMAN KTK OR EQUAL 5 AMPS PER FIXTURE HEAD SERVED. FUSE AT MAIN FUSE BOX SHALL BE 5 AMPS PER FIXTURE HEAD SERVED.
12. SQUID ASSEMBLY SHALL BE BLACKBURN USB335. NO SUBSTITUTIONS.
13. STREET LIGHTS ARE TO BE CENTERED IN PARK STRIPS
14. STREET LIGHTS ARE TO BE PLACED EVERY 300' ALTERNATING SIDES OF THE STREET AND AT ALL INTERSECTIONS

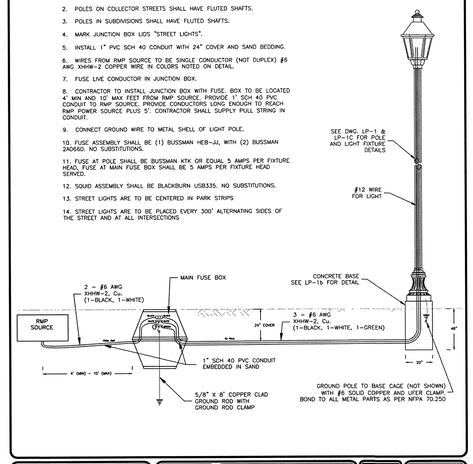

RESIDENTIAL STREET LIGHT CONNECTION DETAIL

DATE APRIL 2014	REVISIONS: DATE / BY / COMMENTS
DRAWING NAME LP-4	
DRAWN BY CJG	
CHECKED / APPROVED	SARATOGA SPRINGS CITY

STANDARD DETAILS — STREET LIGHTS — **LP-4**

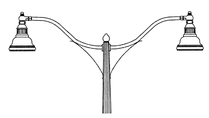

SHOWN WITH DOUBLE FIXTURE

4 BOLTS AT 90 DEGREES 3/4" DIA. x 18" LONG x 3" HOOK BOLTS TO HAVE A 3.5" PROJECTION OUT OF THE CONCRETE. BOLTS TO BE GALVANIZED.

ANCHOR BASE DETAIL 12" BOLT CIRCLE 7/8" x 1" HOLES TO ACCOMMODATE UP TO 3/4" DIA BOLT

ANCHOR BASE

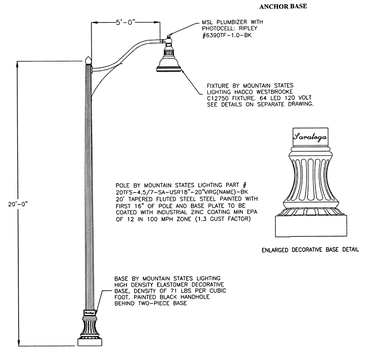

FINISH: BLACK

20' STREET LIGHT COLLECTOR / COMMERCIAL

DATE APRIL 2014	REVISIONS: DATE / BY / COMMENTS
DRAWING NAME LP-2	
DRAWN BY CJG	
CHECKED / APPROVED	SARATOGA SPRINGS CITY

STANDARD DETAILS — STREET LIGHTS — **LP-2**

NOTE!
IF DEPTH CANNOT BE MET MASS MUST BE EQUIVALENT TO MASS SHOWN

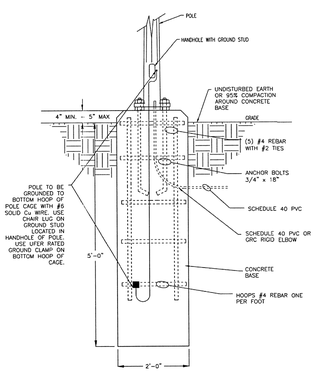

CONCRETE BASE DETAIL 20' STREET LIGHT COLLECTOR / COMMERCIAL

DATE APRIL 2014	REVISIONS: DATE / BY / COMMENTS
DRAWING NAME LP-2B	
DRAWN BY CJG	
CHECKED / APPROVED	SARATOGA SPRINGS CITY

STANDARD DETAILS — STREET LIGHTS — **LP-2B**

MSL ORDERING GUIDE:
C12750: LUMINAIRE
CA12750a: ARM ADAPTOR W/ PC
COLOR: BLACK

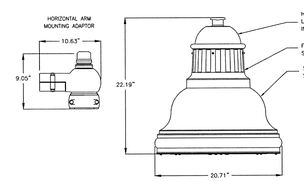

Philips LEDgine Specifications:

- 64, 4000K (NEUTRAL) PHILIPS LUMILEDs LUXEON R LEDs, TYPICAL 75 COLOR RENDERING INDEX (CRI), >65,000 HOURS OF OPERATIONAL LIFE (AT 25°C AMBIENT TEMPERATURE & 70% LUMEN MAINTENANCE), INJECTION MOLDED TYPE III OPTICAL PLATES.
- INTEGRAL PHILIPS ADVANCE XITANIUM LED DRIVER, CLASS 1, IP66 RATED, 350mA, INTELLIVOLT 120 VAC, 50-60 Hz, RoHS COMPLIANT, STANDARD BUILD IN 3-5kV SURGE SUPPRESSION.
- UL8750 & UL1598 COMPLIANT, ETL/CETL LISTED TO U.S. & CANADIAN SAFETY STANDARDS FOR WET LOCATIONS, MANUFACTURED TO ISO 9001:2008 STANDARDS, VIBRATION TESTED TO ANSI C136.31 FOR BRIDGE APPLICATIONS.

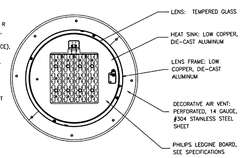

LUMINARE COLLECTOR/ COMMERCIAL STREET LIGHT

DATE APRIL 2014	REVISIONS: DATE / BY / COMMENTS
DRAWING NAME LP-2C	
DRAWN BY CJG	
CHECKED / APPROVED	SARATOGA SPRINGS CITY

STANDARD DETAILS — STREET LIGHTS — **LP-2C**

NOTES:
1. COMMERCIAL LIGHT POLES SHALL BE LOCATED AS INDICATED ON THE APPROVED LIGHTING SITE PLAN, AND AS DESCRIBED IN THE CITY STANDARDS, AND AS DIRECTED BY THE CITY ENGINEER.
2. LIGHT POLES AND LIGHT FIXTURES SHALL CONFORM TO THE CITY STANDARDS. THE LIGHT POLES AND FIXTURES SHALL BE STANDARDS, AND SHALL BE ACCEPTABLE TO THE CITY ENGINEER.
3. EACH COMMERCIAL LIGHT SHALL HAVE A JUNCTION BOX WITH A FUSE.
4. FUSE LIVE CONDUCTOR IN JUNCTION BOXES.
5. MARK JUNCTION BOX COVERS WITH "STREET LIGHTING".
6. INSTALL 1" SCH 40 PVC CONDUITS WITH 24" COVER AND SAND BEDDING.
7. WIRES FROM RMP POWER SOURCE TO JUNCTION BOXES TO BE SINGLE CONDUCTOR (NOT DUPLEX) # 6 AWG XHHW-2 Cu. IN COLORS NOTED ON DETAIL.
8. CONTRACTOR TO INSTALL JUNCTION BOX WITH FUSE. BOX TO BE LOCATED 4' MIN AND 10' MAX FEET FROM RMP SOURCE. PROVIDE 1" SCH 40 PVC CONDUIT TO RMP SOURCE. PROVIDE CONDUCTORS LONG ENOUGH TO REACH RMP POWER SOURCE PLUS 5'. CONTRACTOR SHALL SUPPLY PULL STRING IN CONDUIT.
9. CONNECT GROUND WIRE TO METAL SHELL OF LIGHT POLE.
10. FUSE ASSEMBLY SHALL BE (1) BUSSMAN HEB-JJ, WITH (2) BUSSMAN 2AQ660. NO SUBSTITUTIONS.
11. FUSE AT POLE SHALL BE BUSSMAN KTK OR EQUAL 5 AMPS PER FIXTURE HEAD SERVED. FUSE AT MAIN FUSE BOX SHALL BE 5 AMPS PER FIXTURE HEAD SERVED.
12. SQUID ASSEMBLY SHALL BE BLACKBURN USB335. NO SUBSTITUTIONS.
13. STREET LIGHTS ARE TO BE CENTERED IN PARK STRIPS
14. STREET LIGHTS ARE TO BE PLACED EVERY 300' ALTERNATING SIDES OF THE STREET AND AT ALL INTERSECTIONS

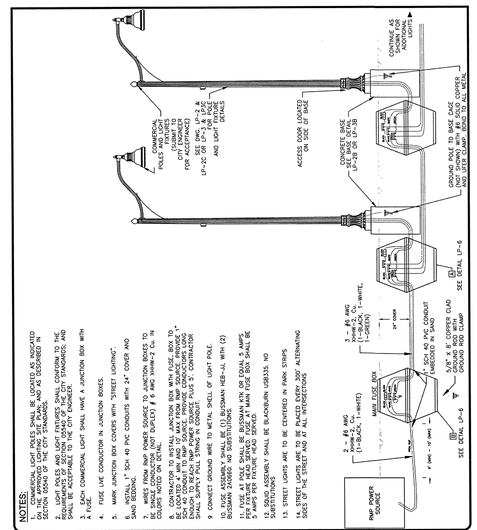

COLLECTOR & ARTERIAL STREET LIGHT CONNECTION DETAIL

DATE APRIL 2014	REVISIONS: DATE / BY / COMMENTS
DRAWING NAME LP-5	
DRAWN BY CJG	
CHECKED / APPROVED	SARATOGA SPRINGS CITY

STANDARD DETAILS — STREET LIGHTS — **LP-5**

DEVELOPER

SIERRA ESTATES PLAT "D"

DEVELOPER

PATTERSON HOMES
www.phutah.com

11038 N. Highland Blvd Suite 100
Highland, UT 84003
(801) 642-0119

0 30 60 120 180
SCALE: 1"= 60'

berg
CIVIL ENGINEERING
11038 N Highland Blvd Suite 400
Highland UT, 84003
office (801) 492-1277
cell (801) 616-1677

REVISIONS			SEAL
NO.	DATE	DESCRIPTION	
1			
2			
3			
4			
5			
6			
7			

ACTION	DATE
FINAL PLAN	7/17/14

PROJECT

SIERRA ESTATES PLAT "D"

DESCRIPTION

FINAL CONSTRUCTION PLAN

CONSTRUCTION DETAILS

SHEET NAME	SHEET NUMBER
STREET DETAILS	D5

Z:\2014\14014 ESTATES\FINAL PLAT D\FINAL PLAT D.DWG

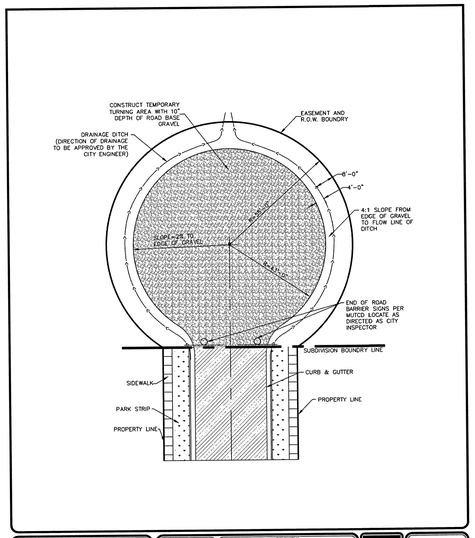

STANDARD TEMPORARY TURN AROUND

DATE	REVISIONS		
APRIL 2014	DATE	BY	COMMENTS
DRAWING NAME: ST-14			
DRAWN BY: RTL			
CHECKED / APPROVED			

SARATOGA SPRINGS CITY

DEP'S COMMENTS ON STD. SARATOGA SPRINGS STREET STANDARDS. FILENAME: RETURN PITS FILE NO. 0-0000

STANDARD DETAILS | STREET STANDARDS | ST-14

NOTES:

1. MARKERS MUST BE PLACED AT ALL "OFFSITE" UTILITIES. PLACE AT MANHOLES AND EVERY 500' ON ALL UNDERGROUND UTILITIES.
2. MANHOLE MARKERS: MARKERS SHALL BE MANUFACTURED OF FIBER REINFORCED COMPOSITE MATERIAL. THAT REINFORCEMENT SHALL BE COMPRISED OF BOTH LINEAL STRANDS AND HORIZONTAL MESH MATS. MARKERS HALL BE FLAT WITH ROUNDED RIB DOWN THE CENTER AND RAILS ON EACH SIDE; SHALL BE AT LEAST 3-3/4" WIDE AND AT LEAST 66" TALL.
3. MARKERS SHALL BE CAPABLE OF WITHSTANDING A MINIMUM OF 10 VEHICLE IMPACTS AT 55 MPH WITH A CAR BUMPER.
4. MARKERS SHALL BE COATED WITH A COLORED COATING THAT WILL TOTALLY PREVENT ULTRA-VIOLET LIGHT FROM REACHING THE RESIN PORTION OF THE MARKER. COATING SHALL NOT FADE, PEEL, OR BLISTER AFTER A MINIMUM OF 2000 HOURS IN A QUV WEATHEROMETER.
5. STANDARD SIZE, HIGH VISIBILITY DECALS SHALL BE PLACED ON EACH SIDE OF THE MARKER. THE DECALS SHALL INCLUDE: THE INTERNATIONAL "NO-DIG" SYMBOL; FEDERAL LAW WARNING TO DETER VANDALS; THE WARNING MESSAGE, TO INCLUDE "WARNING", THE TYPE OF UTILITY AND "SARATOGA SPRINGS, CALL 776-5793.
6. COLORS SHALL BE AS FOLLOWS PER APWA SPECIFICATIONS:

RED: ELECTRIC POWER LINES, CABLES, CONDUIT AND LIGHTING CABLES

YELLOW: GAS, OIL, STEAM, PETROLEUM OR GASEOUS MATERIALS

ORANGE: COMMUNICATIONS, ALARM, SIGNAL, CABLES OR CONDUITS

BLUE: POTABLE WATER

PURPLE: RECLAIMED WATER, IRRIGATION AND SLURRY LINES

GREEN: SEWER AND STORM DRAIN LINES

UTILITY MARKERS

DATE	REVISIONS		
APRIL 2014	DATE	BY	COMMENTS
DRAWING NAME: ST-27			
DRAWN BY: RTL			
CHECKED / APPROVED			

SARATOGA SPRINGS CITY

DEP'S COMMENTS ON STD. SARATOGA SPRINGS STREET STANDARDS. FILENAME: RETURN PITS FILE NO. 0-0000

STANDARD DETAILS | STREET STANDARDS | ST-27

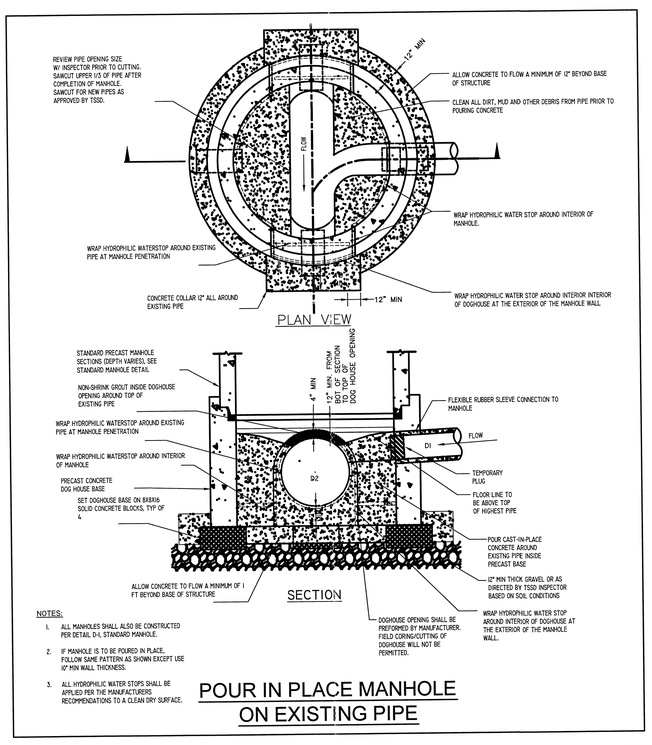

NOTES:

1. ALL MANHOLES SHALL ALSO BE CONSTRUCTED PER DETAIL D-1, STANDARD MANHOLE.
2. IF MANHOLE IS TO BE POURED IN PLACE, FOLLOW SAME PATTERN AS SHOWN EXCEPT USE 10" MIN WALL THICKNESS.
3. ALL HYDROPHILIC WATER STOPS SHALL BE APPLIED PER THE MANAFACTURERS RECOMMENDATIONS TO A CLEAN DRY SURFACE.

POUR IN PLACE MANHOLE ON EXISTING PIPE

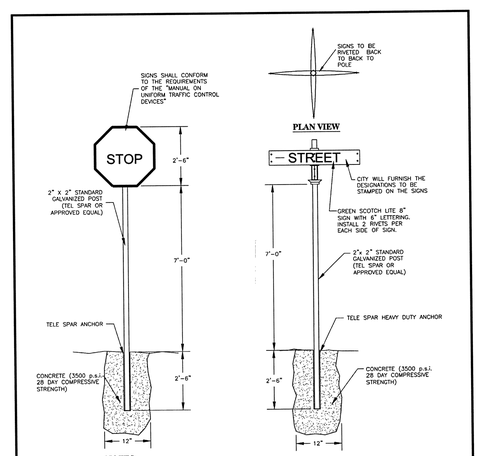

NOTES:

1. SECURE CITY'S APPROVAL OF SIGN FORMAT AND INSTALLATION.
2. INSTALL THE EDGE OF THE SIGN TWO FEET FROM THE VERTICAL EXTENSION OF THE BACK OF CURB AS NEAR AS POSSIBLE TO THE APPROACH CURB POINT OF CURVATURE. SIGNS SHOULD NOT OVERHANG SIDEWALK OR CURB & GUTTER.
3. ALL STREET SIGNS (STOP, SPEED, ETC.) SHALL BE 7' MINIMUM FROM GROUND TO BOTTOM OF SIGN.
4. ALL STREET SIGNS TO BE COATED WITH 3M-HIGH INTENSITY SHEETING, OR ACCEPTABLE EQUAL.

STREET AND REGULATORY SIGNS

DATE	REVISIONS		
APRIL 2014	DATE	BY	COMMENTS
DRAWING NAME: ST-28			
DRAWN BY: RTL			
CHECKED / APPROVED			

SARATOGA SPRINGS CITY

DEP'S COMMENTS ON STD. SARATOGA SPRINGS STREET STANDARDS. FILENAME: RETURN PITS FILE NO. 0-0000

STANDARD DETAILS | STREET STANDARDS | ST-28

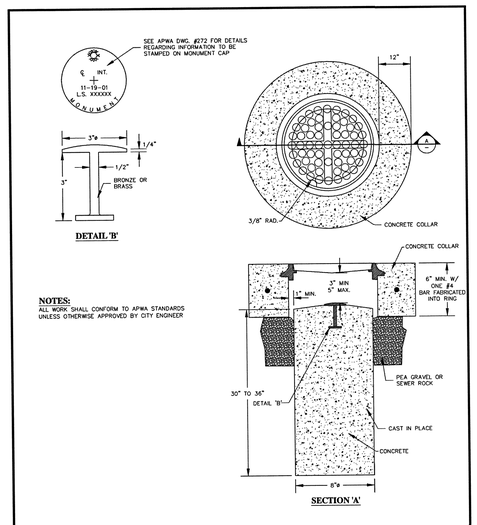

NOTES:
ALL WORK SHALL CONFORM TO APWA STANDARDS UNLESS OTHERWISE APPROVED BY CITY ENGINEER

SURVEY MONUMENT TYPE 1

DATE	REVISIONS		
APRIL 2014	DATE	BY	COMMENTS
DRAWING NAME: ST-29			
DRAWN BY: RTL			
CHECKED / APPROVED			

SARATOGA SPRINGS CITY

DEP'S COMMENTS ON STD. SARATOGA SPRINGS STREET STANDARDS. FILENAME: RETURN PITS FILE NO. 0-0000

STANDARD DETAILS | STREET STANDARDS | ST-29

DEVELOPER

SIERRA ESTATES PLAT "D"

DEVELOPER

PATTERSON HOMES
www.phutah.com

11038 N. Highland Blvd Suite 100
Highland, UT 84003
(801) 642-0119

0 30 60 120 180
SCALE: 1"= 60'

Berg
CIVIL ENGINEERING
11038 N Highland Blvd Suite 400
Highland Ut, 84003
office (801) 492-1277
cell (801) 616-1677

REVISIONS			SEAL
NO.	DATE	DESCRIPTION	
1			
2			
3			
4			
5			
6			
7			

ACTION	DATE
FINAL PLAN	7/17/14

PROJECT

SIERRA ESTATES PLAT "D"

DESCRIPTION

FINAL CONSTRUCTION PLAN

CONSTRUCTION DETAILS

SHEET NAME	SHEET NUMBER
STREET DETAILS	D6

J:\2254\ADMA ESTATES\FINAL PLAT FOR\PLAT D\D6.DWG

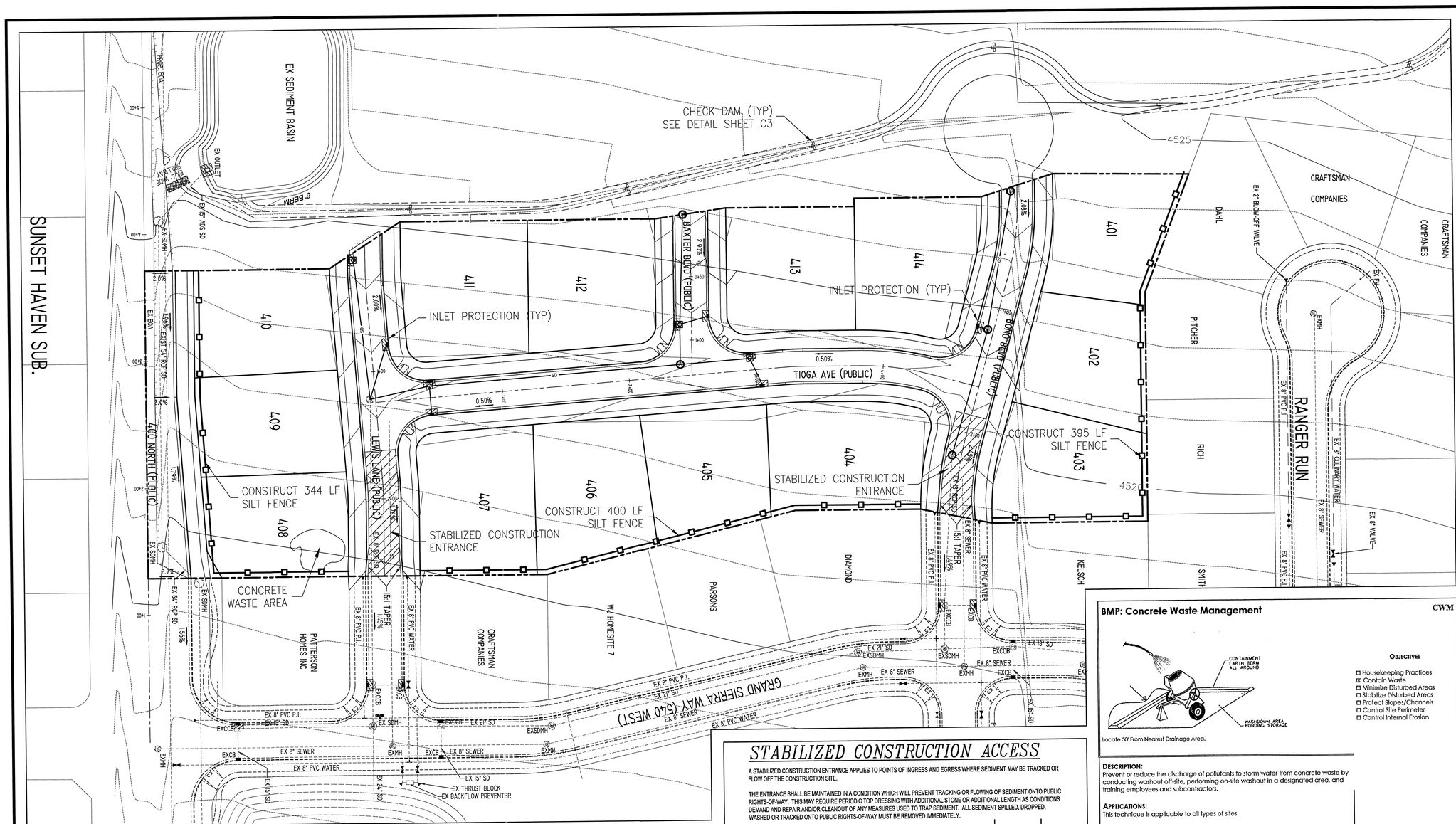

STANDARD WOVEN FABRIC MONOFILAMENT SOCK FOR PLACEMENT AROUND CATCH BASINS

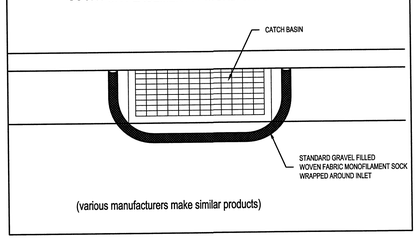

(various manufacturers make similar products)

SILT FENCE CONSTRUCTION

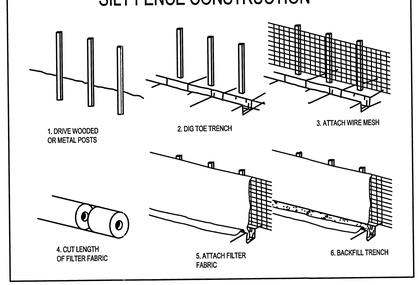

STABILIZED CONSTRUCTION ACCESS

A STABILIZED CONSTRUCTION ENTRANCE APPLIES TO POINTS OF INGRESS AND EGRESS WHERE SEDIMENT MAY BE TRACKED OR FLOW OFF THE CONSTRUCTION SITE.

THE ENTRANCE SHALL BE MAINTAINED IN A CONDITION WHICH WILL PREVENT TRACKING OR FLOWING OF SEDIMENT ONTO PUBLIC RIGHTS-OF-WAY. THIS MAY REQUIRE PERIODIC TOP DRESSING WITH ADDITIONAL STONE OR ADDITIONAL LENGTH AS CONDITIONS DEMAND AND REPAIR AND/OR CLEANOUT OF ANY MEASURES USED TO TRAP SEDIMENT. ALL SEDIMENT SPILLED, DROPPED, WASHED OR TRACKED ONTO PUBLIC RIGHTS-OF-WAY MUST BE REMOVED IMMEDIATELY.

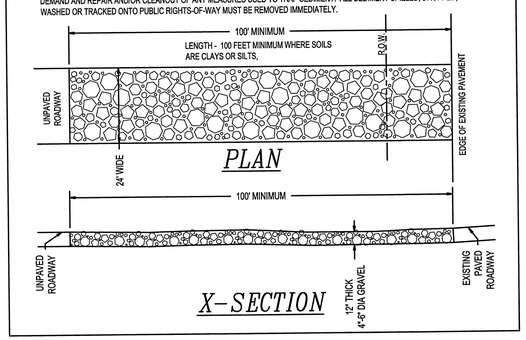

BMP: Concrete Waste Management

CWM

Locate 50' From Nearest Drainage Area.

Objectives

- ☐ Housekeeping Practices
- ☒ Contain Waste
- ☐ Minimize Disturbed Areas
- ☐ Stabilize Disturbed Areas
- ☐ Protect Slopes/Channels
- ☐ Control Site Perimeter
- ☐ Control Internal Erosion

Description:
Prevent or reduce the discharge of pollutants to storm water from concrete waste by conducting washout off-site, performing on-site washout in a designated area, and training employees and subcontractors.

Applications:
This technique is applicable to all types of sites.

Installation/Application Criteria:

- Store dry and wet materials under cover, away from drainage areas.
- Avoid mixing excess amounts of fresh concrete or cement on-site.
- Perform washout of concrete trucks off-site or in designated areas only.
- Do not wash out concrete trucks into storm drains, open ditches, streets, or streams.
- Do not allow excess concrete to be dumped on-site, except in designated areas.
- When washing concrete to remove fine particles and expose the aggregate, avoid creating runoff by draining the water within a bermed or level area. (See Earth Berm Barrier Information sheet.)
- Train employees and subcontractors in proper concrete waste management.

Limitations:

- Off-site washout of concrete wastes may not always be possible.

Maintenance:

- Inspect subcontractors to ensure that concrete wastes are being properly managed.
- If using a temporary pit, dispose hardened concrete on a regular basis.

Targeted Pollutants

- ☐ Sediment
- ☐ Nutrients
- ☐ Toxic Materials
- ☐ Oil & Grease
- ☐ Floatable Materials
- ☒ Other Waste

- ■ High Impact
- ☒ Medium Impact
- ☐ Low or Unknown Impact

Implementation Requirements

- ☐ Capital Costs
- ☐ O&M Costs
- ☒ Maintenance
- ☒ Training

■ High ☒ Medium ☐ Low

DEVELOPMENT

SIERRA ESTATES PLAT "D"

DEVELOPER

PATTERSON HOMES
www.phutah.com
11038 N. Highland Blvd Suite 100
Highland, UT 84003
(801) 642-0119

SCALE: 1"= 40'

Gerg
CIVIL ENGINEERING
11038 N Highland Blvd Suite 400
Highland Ut, 84003
office (801) 492-1277
cell (801) 616-1677

REVISIONS			SEAL
NO.	DATE	DESCRIPTION	Kenneth Ray Gerg, Jr. 9-4-14
1			
2			
3			
4			
5			
6			
7			

ACTION	DATE
FINAL PLANS	7/17/2014

PROJECT

SIERRA ESTATES PLAT "D"

DESCRIPTION

FINAL CONSTRUCTION PLANS

STORMWATER MANAGEMENT PLAN

SHEET NAME	SHEET NUMBER
SWPPP	SW1