SITE DEVELOPMENT CONSTRUCTION PLANS

SAIL HOUSE

LOCATION

NORTH–EAST AND SOUTH–EAST QUARTER SECTION 19
AND NORTH–WEST AND SOUTH–WEST QUARTER OF SECTION 20
TOWNSHIP 6 SOUTH, RANGE 1 EAST
SALT LAKE BASE AND MERIDIAN

PRELIMINARY

SEPT 20, 2014

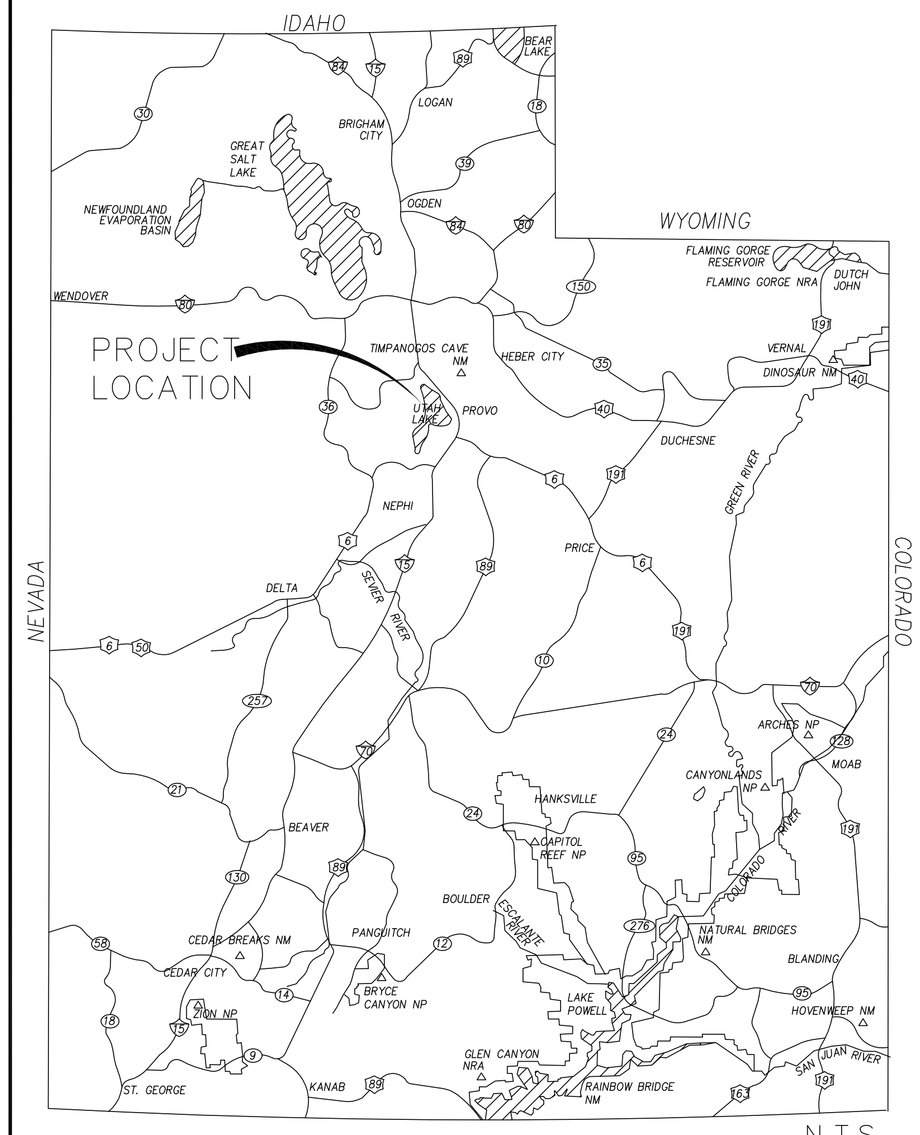

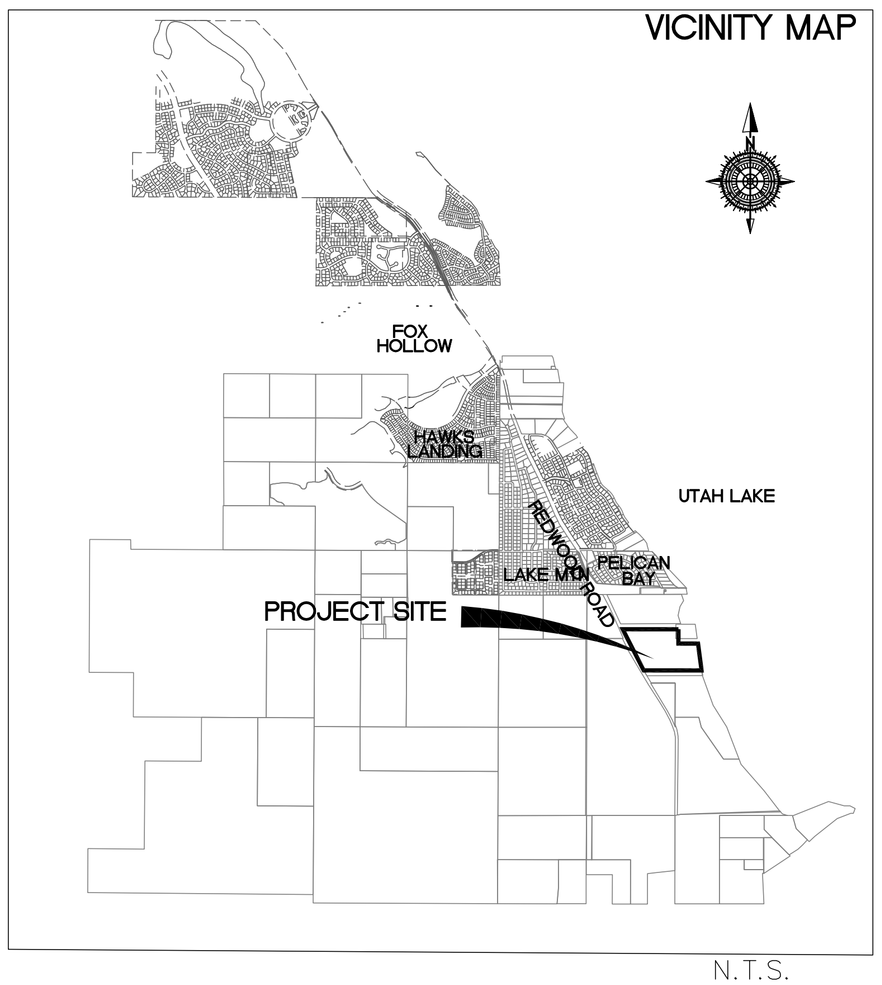

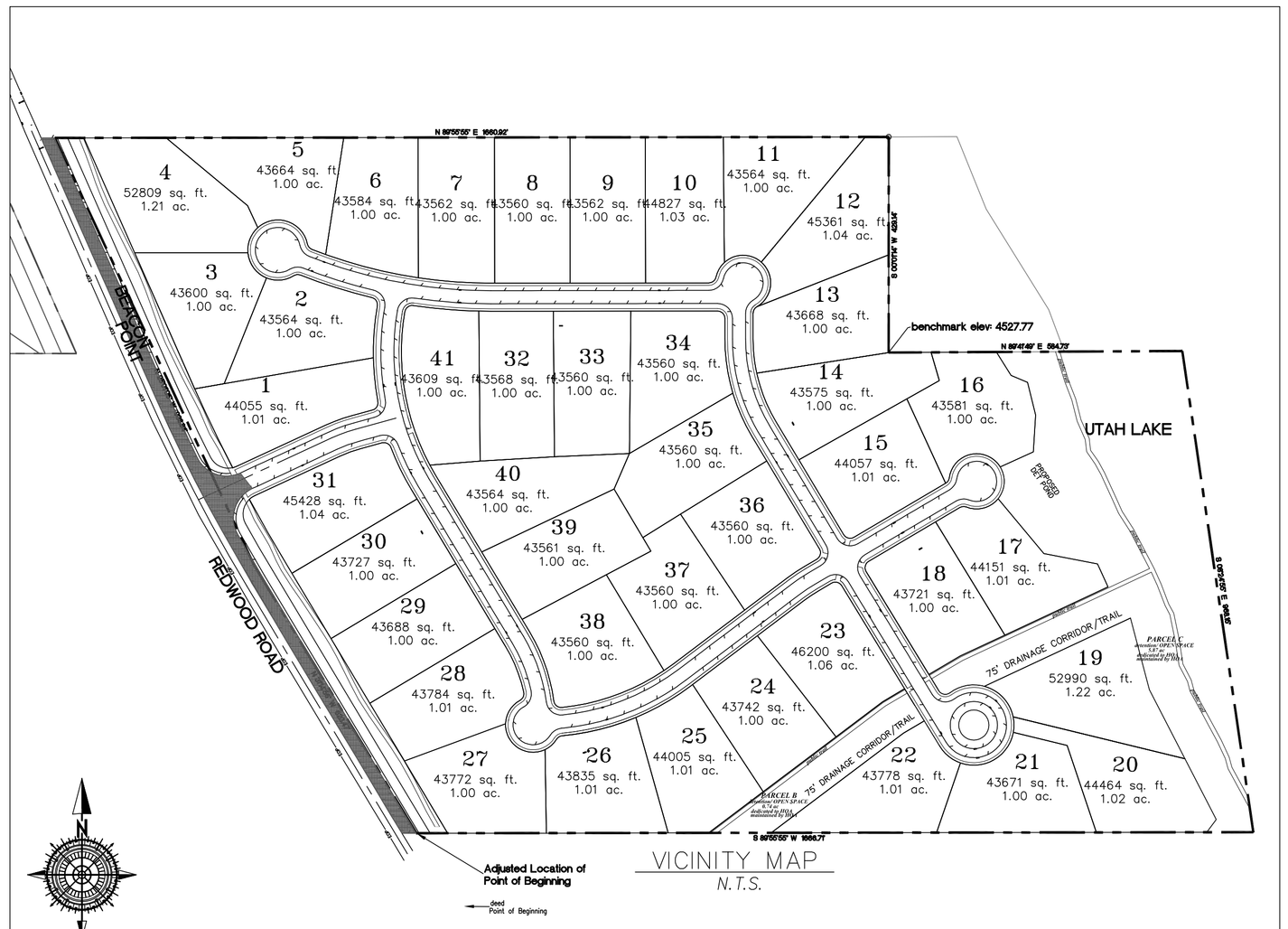

NOTES

CONSISTING OF:
PHASE 1 = 41 LOTS (THIS PROJECT CONTAINS ONLY 1 PHASE)
TOTAL ACREAGE = 56.46 ACRES
AVERAGE LOT SIZE = 1.0 ACRES
30% SLOPE and GREATER= 1.45 ACRES
TYP LOT SIZE= 1.0 AC
OPEN SPACE=7.78 AC (13.7%)
TOTAL LOT AREA=40.56 AC (71.8%)
IMPERVIOUS AREA=3.37 AC (6.0%)
RIGHT OF WAY AREA=8.12 AC (14.4%)

REVISIONS

1	XXXXX	XXXX	XXX
	DESCRIPTION	DATE	SHEETS AFFECTED

INDEX OF SHEETS

1	TITLE SHEET
1A	PROJECT NOTES
N/A	PLATS (2)
2	EXISTING CONDITIONS/DEMOLITION PLAN
3	OVERALL SITE PLAN
G	GRADING AND DRAINAGE SHEET INDEX
G1–G4	GRADING SHEETS (1"=40')
U1	CULINARY WATER UTILITY PLAN
U2	IRRIGATION WATER UTILITY PLAN
U3	SANITARY SEWER UTILITY PLAN
U4	STORM WATER UTILITY PLAN
U5	OFFSITE WATER PLAN
PP	OVERALL PLAN AND PROFILE SHEET INDEX
P1	ROAD C STA: 0+00 TO 5+00
P2	ROAD B STA: 0+00 TO 10+00
P3	ROAD B STA: 10+00 TO 20+00
P4	ROAD A STA: 0+00 TO 10+00
P5	ROAD A STA: 10+00 TO 20+00
P6	75 FT DRAINAGE CORRIDOR
P7	REDWOOD 0+00 TO 10+50
P8	REDWOOD 10+50 TO END
P9	REDWOOD 4+00 TO 15+00 (OFFSITE WATERLINES)
P10	REDWOOD 15+00 TO 25+00 (OFFSITE WATER LINES)
P11	REDWOOD 25+00 TO 35+50 (OFFSITE WATER LINES)
DR1–DR2	DRAINAGE REPORT
SS1–SS2	SIGNAGE AND STRIPING PLAN
SWPPP	STORM WATER POLLUTION PROTECTION PLAN
ER1–ER2	EROSION CONTROL DETAILS
D1	STREET DETAILS
D2	CULINARY WATER DETAILS
D3	PRESSURIZED IRRIGATION DETAILS
D4	STORM WATER DETAILS
D5a–D5b	POND DETAILS
LANDSCAPE PLANS	
L–L100	OVERALL PLANTING PLAN
L–L101 to L–L106	PLANTING PLAN SHEETS
L–L501 to L–L502	PLANTING DETAILS
L–R100	OVERALL IRRIGATION PLAN
L–R101 to L–R106	IRRIGATION PLAN SHEETS
L–R501 to L–R502	IRRIGATION DETAILS

LEGEND

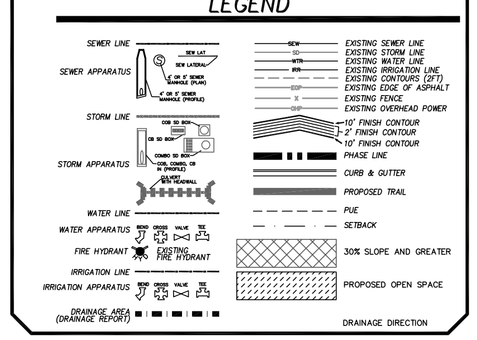

GATEWAY CONSULTING, inc.
P.O. BOX 951005 SOUTH JORDAN, UT 84095
PH: (801) 694-5848 FAX: (801) 432-7050
paul@gatewayconsultingllc.com
CIVIL ENGINEERING • CONSULTING • LAND PLANNING
CONSTRUCTION MANAGEMENT

DATE:	PROJECT:	FILE:	SHEET NO.
9–20–14	SAIL HOUSE		1

SAIL HOUSE

SAIL HOUSE

- **SUBDIVISION ORDINANCE**

THE SAIL HOUSE PROJECT IS BEING PROCESSED AS RR ZONE AS A PRELIMINARY SUBDIVISION PLAT.

- **SAILHOUSE**

PHASE 1= 56.5 ACRES

PROJECT DESCRIPTION

CONSISTING OF:

PHASE 1 = 41 LOTS
TOTAL ACREAGE = ±56.46 ACRES
AVERAGE LOT SIZE = 1.0 ACRES
30% SLOPE = 1.45 ACRES

LAND USAGE

RESIDENTIAL, RR ZONE

DESIGN TEAM AND CONTACT LIST

OWNER/ DEVELOPER/CLIENT
WESTERN STATES VENTURES
contact: Paul Linford
362 W Pierpont Ave
SALT LAKE CITY, UT 84104
TELEPHONE 801-979-8844

LAND PLANNING:
GATEWAY CONSULTING, Inc.
Contact: Paul Watson
PO Box 951005
SOUTH JORDAN, UT 84095
TELEPHONE 801-694-5848
FAX 801-432-7050

CIVIL ENGINEERING,
GATEWAY CONSULTING, Inc.
Contact: Paul Watson
PO Box 951005
SOUTH JORDAN, UT 84095
TELEPHONE 801-694-5848
FAX 801-432-7050

UTILITIES

Blue Stakes Location Center
Phone: 801-208-2100
or 1-800-662-4111

Questar Gas Co.
Main Phone:1-800-323-5517

Utah Power & Light
Main Phone: 1-888-221-7070

Qwest Phone Co.
Main Phone: 1-800-244-1111

City Public Works
Main Phone: 801-766-9793
Address: 2015 South Redwood Rd
Saratoga Springs, Utah 84043

WATER QUALITY, SURFACE AND HYDROLOGY:
GATEWAY CONSULTING, Inc.
Contact: Paul Watson
PO Box 951005
SOUTH JORDAN, UT 84095
TELEPHONE 801-694-5848
FAX 801-432-7050

CONTRACTOR:
STILL TO BE DETERMINED

SURVEYING:
STILL TO BE DETERMINED

SOILS/GEOLOGY:
CMT ENGINEERING
CONTACT: PHIL PACK
595 S RIVERWOODS PARKWAY STE 270
LOGAN, Ut 84119
ph: 435-753-2850
fax: 435-753-2851

SARATOGA SPRINGS CITY
Main Phone: 801-766-9793
Address: 2015 South Redwood Rd.
Saratoga Springs, Utah 84043

CITY ENGINEER
IN HOUSE

ADJACENT PROPERTY OWNERS

LIGHT HOUSE
1626 Park PL
Park City Ut
PO Box 981014

UTAH LAKE
51 So. University Ave, Suite 109
Provo, Ut 84601
801-851-2900
Reed Price

UDOT REGION 3 (REDWOOD ROAD)
658 N. 1500 W
Orem, Ut 84057
801-227-8000
Teri Newell

MENDENHALL
2954 E Marley Pl
SLC, UT 84109

LAND SOLUTIONS PARTNERS - HARBOR POINT LLC
670 W Shepard Lane
Farmington, Ut 84025
801-447-4656

PRELIMINARY PLAN NOTES

* REGIONAL CONTEXT MAPS BASED ON THE FOLLOWING SOURCES:
  * USGS QUAD SHEET MAPS, 2000 SCALE,
  * PLANS AND DRAWING FROM NEIGHBORHOOD 1
  * CONTOURS FROM FOCAL POINT SURVEYS
  * UTAH COUNTY TOPOGRAPHIC INFORMATION - GIS INFORMATION

- **SOURCE OF TOPOGRAPHY:** TOPOGRAPHY SHOWN ON THESE PLANS WAS PREPARED FROM FIELD MAPS IN FROM FOCAL POINT SURVEYS PO BOX 312, HEBER CITY, UTAH 84032

- **BASIS OF ELEVATIONS:** WEST ¼, SECTION 12, TOWNSHIP 6 SOUTH, RANGE 1 WEST, SALT LAKE BASE AND MERIDIAN ELEVATION: 4966.12' (BENCH MARK)

- **SLOPE ANALYSIS:** THE FOLLOWING IS A SUMMARY OF THE SLOPE ANALYSIS PREPARED FOR THE SUBJECT PROPERTIES: SEE PLATS FOR SLOPE AREA.

- **INDIVIDUAL LOT DRAINAGE:** DUE TO MANY POSSIBILITIES OF THE INDIVIDUAL LOTS BY FUTURE BUILDERS. THE DRAINAGE AROUND THE FUTURE BUILDINGS IS SUBJECT TO A INDIVIDUAL LOT STORM WATER DRAINAGE PLAN (PREPARED BY THE FUTURE LOT DEVELOPER) PER SARATOGA SPRINGS CITY STANDARDS. THE LOTS WILL BE CURRENTLY GRADED TO DRAIN WITH OVERLAND FLOW ACROSS THE LOTS. REROUTING THE STORM WATER AROUND THE BUILDINGS IS REQUIRED BY THE INDIVIDUAL LOT BUILDER.

- **SOIL/GEOLOGY:** AN ENGINEERING GEOLOGY AND SOIL ENGINEERING REPORT HAS BEEN PREPARED FOR THE SUBJECT PROPERTY: SEE IGES REPORT

- **EXISTING AND PROPOSED ZONES:** LOW AND MEDIUM DENSITY RESIDENTIAL AND COMMERCIAL

- **RESTRICTED USE - OPEN SPACE:** AREAS ARE SUBJECT TO SARATOGA SPRINGS CITY CONSIDERATIONS, REVIEW, AND APPROVAL.

- **PROPERTY LINE:** INFORMATION FOR THE SAIL HOUSE PROJECT TAKEN FROM ALTA/ACSM SURVEY DRS LAND SURVEYING INC BY BRUCE WILLIAMS (RLS NO. 368351) . DATED 9-16.12.

- **DRAINAGE PLANS:** PRELIMINARY HYDROLOGY, HYDRAULICS AND WATER QUALITY PREPARED ACCORDING TO THE FOLLOWING CRITERIA: PEAK STORM WATER RUNOFF IN THE DEVELOPMENT "AFTER" CONDITION SHALL BE NO GREATER THEN PEAK STORM WATER RUNOFF IN THE "BEFORE" PROJECT CONDITION. NO BUILDINGS WILL BE ALLOWED WITHIN 10 YEAR & 100 YEAR FLOOD PLAINS.

- **PROJECT SEWER MAINS:** ARE TO BE CONNECTED TO PRIVATE SEPTIC SEWER SYSTEM.

- **UTILITIES:**
  * POWER: OVERHEAD AND UNDERGROUND POWER - UTAH POWER AND LIGHT
  * TELEPHONE: UNDERGROUND TELEPHONE - QWEST.
  * NATURAL GAS: QUESTAR
  * GARBAGE COLLECTION: CITY OF SARATOGA SPRINGS

- **STREET PLAN AND PROFILES:**
  * ALL PRIVATE STREET CONSTRUCTION PER SARATOGA SPRINGS TYPICAL ROAD SECTION: 26' WIDE OF AC PAVEMENT WITHIN A 56' GRADED WIDTH PER TYPICAL CITY SECTION INCLUDED IN PROJECT PLANS OR OTHERWISE NOTED ON PLANS.
  * STRUCTURAL PAVEMENT SECTION SHALL BE CONSTRUCTED PER ABOVE REFERENCED SOIL REPORT.

PROJECT TIME TABLE

phase 1 = YEAR 2014

SARATOGA SPRINGS CONSTRUCTION NOTES

SARATOGA CITY STANDARDS NOTES:

I. Contractor shall field verify locations and invert elevations of existing manholes and other utilities before staking or constructing any new sewer lines.
II. Contractor shall field verify locations and invert elevations of existing storm drain structures and other utilities before staking or constructing any new storm drain lines.
III. All construction shall comply to the Standard Technical Specifications and Drawings for the City Of Saratoga Springs, Utah. Saratoga Springs / Design / 05-2013 00500 - 14 DESIGN STANDARDS
IV. Existing Utilities have been noted to the best of Engineers knowledge, it is owners and contractors responsibility to locate utilities in field and notify Engineer and City if discrepancies exist.
V. Post-approval alterations to lighting plans or intended substitutions for approved lighting equipment shall be submitted to the City for review and approval.
VI. The City reserves the right to conduct post-installation inspections to verify compliance with the City's requirements and approved Lighting Plan commitments, and if deemed appropriate by the City, to require remedial action at no expense to the City.
VII. All exterior lighting shall meet IESNA full-cutoff criteria unless otherwise approved by the City."

GENERAL

1. ALL WORK SHALL BE DONE IN ACCORDANCE WITH THE SPECIFICATIONS ORDINANCES & REQUIREMENTS OF SARATOGA SPRINGS CITY & LATEST APWA STANDARDS.
2. A PRE-CONSTRUCTION CONFERENCE WITH CITY ENGINEER, CITY PUBLIC WORKS, AND CONTRACTOR WILL BE HELD A MINIMUM OF 48 HOURS PRIOR TO START OF WORK.
3. THE CONTRACTOR SHALL MAINTAIN ALL EXISTING DRAINAGE FACILITIES WITHIN THE CONSTRUCTION AREA UNTIL THE DRAINAGE IMPROVEMENTS ARE IN PLACE AND FUNCTIONING.
4. ALL CONTRACTORS WORKING WITHIN THE PROJECT BOUNDARIES ARE RESPONSIBLE FOR COMPLIANCE WITH ALL APPLICABLE SAFETY LAWS OF ANY JURISDICTIONAL BODY. THE CONTRACTOR SHALL BE RESPONSIBLE FOR ALL BARRICADES, SAFETY DEVICES AND CONTROL OF TRAFFIC WITHIN AND AROUND THE CONSTRUCTION AREA.
5. EXISTING A.C. PAVEMENT SHALL BE CUT TO A NEAT STRAIGHT LINE PARALLEL OR PERPENDICULAR TO THE STREET OR DRIVEWAY CENTERLINE OR AS SHOWN ON PLANS AND THE EXPOSED EDGE SHALL BE TACKED WITH EMULSION PRIOR TO PAVING AS PER SARATOGA SPRINGS CITY. SPECIFICATIONS.
6. ALL MATERIALS FURNISHED ON OR FOR THE PROJECT MUST MEET THE MINIMUM REQUIREMENTS OF THE APPROVING AGENCIES OR AS SET FORTH HEREIN, WHICHEVER IS MORE RESTRICTIVE.
7. CONTRACTORS MUST FURNISH PROOF THAT ALL MATERIALS INSTALLED ON THIS PROJECT MEET THE REQUIREMENTS OF THE SPECIFICATIONS AT THE REQUEST OF THE AGENCY AND/OR THE ENGINEER.
8. THE LOCATIONS OF EXISTING UNDERGROUND OR OVERHEAD UTILITIES ARE SHOWN IN AN APPROXIMATE WAY ONLY.THE CONTRACTOR SHALL DETERMINE THE EXACT LOCATION & ELEVATION OF ALL EXISTING UTILITIES BEFORE COMMENCING WORK. HE AGREES TO BE FULLY RESPONSIBLE FOR ANY AND ALL DAMAGES WHICH MIGHT BE OCCASIONED BY HIS FAILURE TO EXACTLY LOCATE AND PRESERVE ANY AND ALL UNDERGROUND OR OVERHEAD UTILITIES. IT IS THE CONTRACTOR'S RESPONSIBILITY TO CALL BLUE STAKES PRIOR TO ANY CONSTRUCTIONS.
9. ALL CONTRACTORS WORKING WITHIN THE PUBLIC ROAD RIGHT-OF-WAY ARE REQUIRED TO SECURE A RIGHT-OF-WAY PERMIT FROM SARATOGA SPRINGS CITY AT LEAST 24 HOURS PRIOR TO ANY CONSTRUCTION. ALSO ANY PERMITS REQUIRED FOR STATE AND FEDERAL RIGHT-OF-WAYS NEED TO BE OBTAINED FROM THE ASSOCIATED GOVERNING BODY.
10. ALL COSTS OF RETESTING AND RE-SURVEYING FOR PREVIOUSLY FAILED TESTS SHALL BE THE RESPONSIBILITY OF THE CONTRACTOR.
11. ALL COSTS TO THE CONTRACTOR INCURRED IN CORRECTING DEFICIENT WORK SHALL BE TO THE CONTRACTORS ACCOUNT. FAILURE TO CORRECT SUCH WORK WILL BE CAUSE FOR A STOP WORK ORDER AND POSSIBLE TERMINATION.
12. THE CONTRACTOR'S) SHALL REMOVE ALL OBSTRUCTIONS, BOTH ABOVE, AND BELOW GROUND, AS REQUIRED FOR THE CONSTRUCTION OF THE PROPOSED IMPROVEMENTS. THIS SHALL INCLUDE CLEARING AND GRUBBING WHICH CONSIST OF CLEARING THE GROUND SURFACE OF ALL TREES, STUMPS, BRUSH, UNDERGROWTH, HEDGES, HEAVY GROWTH OF GRASS OR WEEDS, FENCES, STRUCTURES, DEBRIS, RUBBISH, AND SUCH MATERIAL WHICH, IN THE OPINION OF THE ENGINEER, IS UNSUITABLE FOR THE FOUNDATION OF PAVEMENTS. ALL MATERIAL NOT SUITABLE FOR FUTURE USE ON SITE SHALL BE DISPOSED OF OFF SITE.
13. ALL ROADWAYS, CULINARY WATER, STORM DRAIN IMPROVEMENTS SHALL BE CONSTRUCTED IN ACCORDANCE WITH THE 2002 EDITION OF THE APWA.
14. UTILITY CONDUITS TO BE INSTALLED AT EVERY INTERSECTION PER SARATOGA SPRINGS CITY STANDARDS. "T" SECTIONS TO HAVE CONDUITS ON TWO SIDES (MIN.) 4 WAY INTERSECTIONS TO HAVE CONDUITS ON 3 SIDES (MIN.).
15. ALL CONTRACTORS ARE TO FIELD VERIFY ALL EXISTING CURB & GUTTER, STORM DRAIN, CHANNEL CROSSINGS, UTILITIES AND SEWER ELEVATIONS FOR INVERTS PRIOR TO CONSTRUCTION AND NOTIFY ENGINEER WHEN ELEVATIONS OR INVERTS DO NOT MATCH PLANS.

ROADWAY/PARKING/STORM DRAIN

1. ALL PARKING LOT CONSTRUCTION SHALL MEET THE MINIMUM REQUIREMENTS OF THE SARATOGA SPRINGS CITY SPECIFICATIONS.
2. WHEN DISCREPANCIES OCCUR BETWEEN PLANS AND SPECIFICATIONS, THE CONTRACTOR SHALL IMMEDIATELY NOTIFY GATEWAY CONSULTING LLC. UNTIMELY NOTIFICATION SHALL NEGATE ANY CONTRACTORS CLAIM FOR ADDITIONAL COMPENSATION.
3. INSPECTION OF WORK WITHIN THE PUBLIC RIGHT-OF WAY SHALL BE BY SARATOGA SPRINGS CITY.
4. ALL TOPS OF VALVE BOXES AND SEWER MANHOLES SHALL BE SET FLUSH WITH THE SLOPE OF THE FINISHED STREET GRADES. THE ROADWAY CONTRACTOR SHALL INSTALL AND ADJUST ALL SPACERS, GRADE RINGS, MANHOLE RINGS AND LIDS. CONCRETE COLLARS SHALL BE INSTALLED IN ACCORDANCE WITH SARATOGA SPRINGS CITY STANDARDS & SPECIFICATIONS. CONTRACTOR SHALL NOTIFY SARATOGA SPRINGS CITY AND THE ENGINEER 24 HOURS PRIOR TO POURING CONCRETE COLLARS.
5. ALL COSTS OF TESTING & RETESTING FOR PREVIOUSLY FAILED TESTS SHALL BE THE CONTRACTOR'S RESPONSIBILITY.
6. ALL COSTS TO THE CONTRACTOR INCURRED IN CORRECTING DEFICIENT WORK SHALL BE TO THE CONTRACTORS ACCOUNT. FAILURE TO CORRECT SUCH WORK WILL BE CAUSE FOR A STOP WORK ORDER AND POSSIBLE TERMINATION.
7. ALL STORM DRAINAGE APPURTENANCES SHALL BE INSPECTED AND CERTIFIED BY SARATOGA SPRINGS CITY.
8. ALL WATER VALVES WILL BE PLACED SO AS NOT TO CONFLICT WITH ANY CONCRETE CURB, GUTTER, VALLEY GUTTER, AND SIDEWALK IMPROVEMENTS.
9. ALL WATER METERS AND FIRE HYDRANTS ARE TO BE LOCATED OUTSIDE OF THE ROADWAYS AREA AND THERE MUST BE AT LEAST A ONE (1) FOOT SEPARATION BETWEEN ANY BACK OF SIDEWALK (OR CURB IF NO SIDEWALK) AND THE LEADING EDGE OF ANY FIRE HYDRANT.
10. ALL WORK SHALL BE INSPECTED BY THE CITY OF SARATOGA SPRINGS.
11. ALL MATERIAL PLACED AS FILL OR BACKFILL SHALL BE PLACED AND COMPACTED IN ACCORDANCE WITH SARATOGA SPRINGS CITY STANDARD & SPECIFICATION.
12. OVER EXCAVATION AND ADDITIONAL GRANULAR BACKFILL MAY BE REQUIRED IN HIGH GROUNDWATER AREAS WHICH ARE TO BE DETERMINED BY SARATOGA SPRINGS CITY.
13. COLLAPSIBLE SOILS IN THE AREA MAY REQUIRE A GEOTECHNICAL ENGINEER TO VERIFY SUB-BASE CONDITIONS PRIOR TO PLACEMENT OF GRANULAR FILL TO ELIMINATE THE COLLAPSIBLE SOILS WITHIN DEDICATED ROADWAYS.

SEWER

1. ALL SEWER WILL BE ON PRIVATE SEPTIC TANKS. SEPTIC SYSTEMS TO FOLLOW UTAH COUNTY HEALTH CODES AND APPROVALS.
2. THE HORIZONTAL SEPARATION OF THE WATER AND SEWER MAINS SHALL BE A MINIMUM OF TEN (10) FEET.
3. ALL SEWER TRENCHES SHALL BE BACKFILLED IN ACCORDANCE WITH SARATOGA SPRINGS CITY SPECIFICATIONS. THE SEWER PIPE BEDDING SHALL BE IN ACCORDANCE WITH SARATOGA SPRINGS CITY SPECIFICATIONS.
4. THE CONTRACTOR SHALL CONSTRUCT THE SANITARY SEWER IN ACCORDANCE WITH THE STAMPED PLANS APPROVED BY THE SARATOGA SPRINGS SEWER DISTRICT. THESE PLANS WILL BE PROVIDED TO THE CONTRACTOR BY THE PROJECT INSPECTOR PRIOR TO CONSTRUCTION. WORK SHALL NOT BE DONE WITHOUT THE CURRENT SET OF APPROVED PLANS.

WATER

1. THE WATER SYSTEM SHALL BE CONSTRUCTED TO CONFORM WITH THE STANDARDS SET FORTH IN THE "STATE OF UTAH RULES FOR PUBLIC DRINKING WATER SYSTEMS", AND THE LATEST APWA SPECIFICATIONS AND STANDARD DRAWING.
2. WATER DISTRIBUTION MAINS SHALL BE CONSTRUCTED WITH C900 PIPE. THE PIPE SHALL BE INSTALLED IN WORKMANLIKE MANNER BY PERSONS PROPERLY QUALIFIED TO PERFORM SAID WORK AND SHALL BE IN CONFORMANCE WITH THE MANUFACTURER'S RECOMMENDATIONS AS APPROVED BY THE CITY ENGINEER. ALL WORK AND MATERIALS MUST CONFORM TO CURRENT REQUIREMENTS OF THE UTAH PUBLIC WORKS GENERAL CONDITIONS AND STANDARDS SPECIFICATIONS FOR CONSTRUCTION AND/OR SARATOGA SPRINGS CITY.
3. ALL WATER MAINS SHALL HAVE A MINIMUM COVER OF 4 FEET. AFTER INSTALLATION OF THE WATER MAINS, THE TRENCHES SHALL BE COMPACTED TO 95% MODIFIED PROCTOR OF MAXIMUM DENSITY TO PREVENT FURTHER SETTLEMENT. ALL MAINS SHALL BE LEAK-TESTED, FLUSHED AND SANITIZED BEFORE CONNECTION TO THE MUNICIPAL SYSTEM.
4. HORIZONTAL AND VERTICAL SEPARATION OF CULINARY WATER AND SEWER SHALL BE IN COMPLIANCE WITH SARATOGA SPRINGS CITY STANDARDS AND THOSE SET FORTH IN THE STATE CODES.
5. ALL GATE VALVES SHALL BE FLANGED AND/OR M.J. AND SHALL CONFORM TO APWA 2002 SPECIFICATIONS AND SHALL HAVE A 200 P.S.I. WORKING PRESSURE RATING. ALL VALVES SHALL BE ANCHORED IN CONFORMANCE WITH SARATOGA SPRINGS CITY SPECIFICATIONS.
6. ALL TEES, PLUGS, CAPS AND BENDS, AND AT OTHER LOCATIONS WHERE UNBALANCED FORCES EXIST, SHALL BE SECURED AND ANCHORED BY SUITABLE THRUST BLOCKING AS SHOWN IN THE SARATOGA SPRINGS CITY SPECIFICATIONS.
7. THE DISTRIBUTION SYSTEM SHALL BE PRESSURE TESTED IN ACCORDANCE WITH A.W.W.A. STANDARDS.
8. CONTRACTOR SHALL NOTIFY THE ENGINEER, THREE (3) WORKING DAYS BEFORE INITIAL CONSTRUCTION BEGINS AND SHALL ALSO REQUEST SARATOGA SPRINGS CITY DEPARTMENT OF PUBLIC WORKS INSPECTION OF WATER LINES AND APPURTENANCES TWENTY-FOUR (24) HOURS IN ADVANCE OF BACKFILLING.
9. CONTRACTOR TO FIELD VERIFY ALL VALVE BOX LID ELEVATIONS TO ASSURE THAT SAID LID ELEVATIONS MATCH FINAL STREET GRADE, AND ALL METER LID ELEVATIONS TO MATCH AN EXTENSION OF THE SIDEWALK GRADE.
10. UPON THE COMPLETION OF WORK, THE CONTRACTOR SHALL SUBMIT A SET OF AS-BUILT PLANS TO THE ENGINEER.
11. RESIDENTIAL WATER SERVICE CONNECTIONS SHALL BE 1" IPS POLYETHYLENE WATER PIPE W/ 3/4" METER SETTER & BOX AND THE STUB SHALL BE MARKED WITH A 4X4 BATTER BOARD PAINTED BLUE FOR FUTURE IDENTIFICATION. THE WATER METER WILL BE FURNISHED AND INSTALLED BY THE CITY OR BUILDING CONTRACTOR.
12. THE SECONDARY WATERLINE SHALL BE CONSTRUCTED TO CONFORM WITH THE STANDARDS SET FORTH IN SARATOGA SPRINGS SPECIFICATION SECTION 02680. ALL SECONDARY PIPE SHALL BE PURPLE PIPE. (SEE D-2)

NOTE.

ROAD DEDICATION PLAT AND EASEMENTS FOR DRAINAGE OUTFALL AND DETENTION BASIN MUST BE RECORDED AND BOND POSTED PRIOR TO ACCEPTANCE OF IMPROVEMENTS AND BEGINNING OF WARRANTY PERIOD.

NO.	DESCRIPTION	DATE	APP'D

ORIG. DATE:
SURVEY BY:
DRAWN BY: GPW
DESIGNED BY: GPW
CHECKED BY: GPW
SCALE: N/A

GATEWAY CONSULTING, Inc.
P.O. BOX 951005 SOUTH JORDAN, UT 84095
PH: (801) 694-5848 FAX: (801) 432-7050
paul@gatewayconsultingllc.com
CIVIL ENGINEERING • CONSULTING • LAND PLANNING
CONSTRUCTION MANAGEMENT

SAIL HOUSE

PROJECT NOTES

DRAWING FILE
PROJECT NUMBER
PLOT DATE: 9-20-14

SARATOGA CITY

PRELIMINARY NOT FOR CONSTRUCTION

SHEET NO. 1A

SAIL HOUSE PHASE 1

LOCATED IN
EAST 1/2 OF SECTION 19 TOWNSHIP 6 SOUTH, RANGE 1 EAST/
AND SOUTHWEST 1/4 OF SECTION 20, TOWNSHIP 6 SOUTH, RANGE 1 EAST
SALT LAKE BASE AND MERIDIAN
SARATOGA SPRINGS, UTAH

PRELIMINARY PLAT

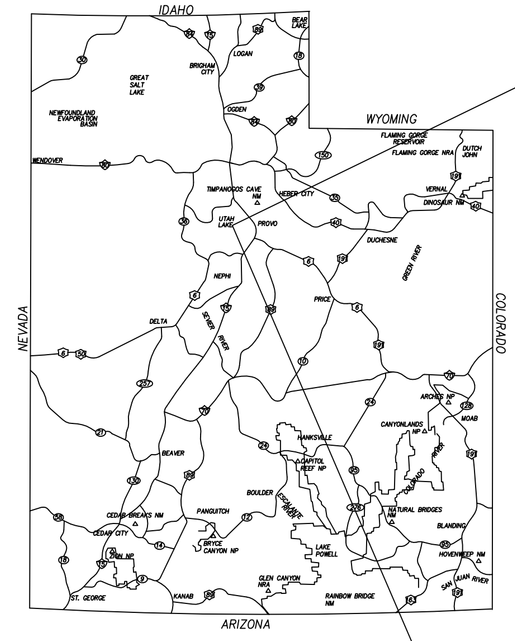

VICINITY MAP
NOT TO SCALE

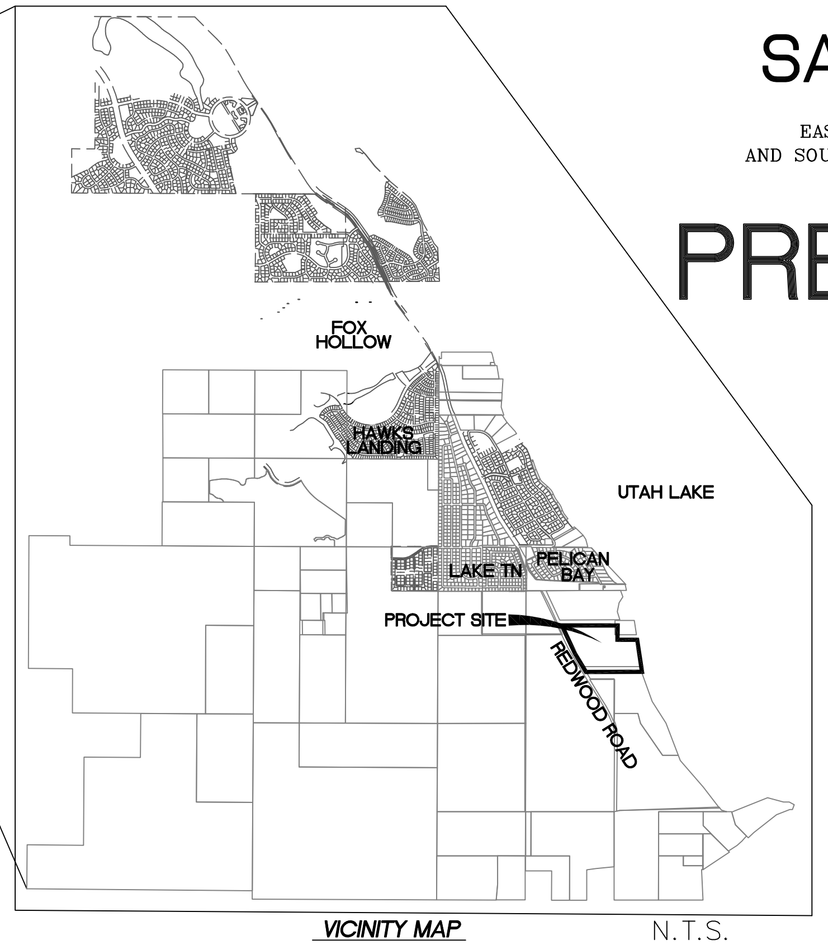

VICINITY MAP
NOT TO SCALE
N.T.S.

TYPICAL SETBACK AND PUE DETAILS

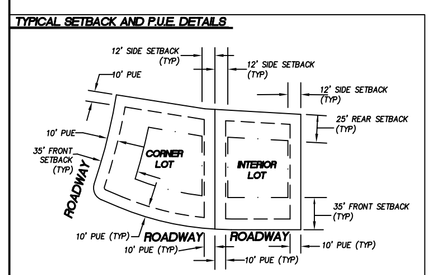

INTERIOR AND CORNER LOTS

NOTES:
1) 10 FEET PUE AROUND ALL LOTS
2) REAR YARD SETBACK=25 FEET
3) SIDEYARD SETBACK=12 FEET
4) STREET SETBACK=35 FEET

NOT TO SCALE

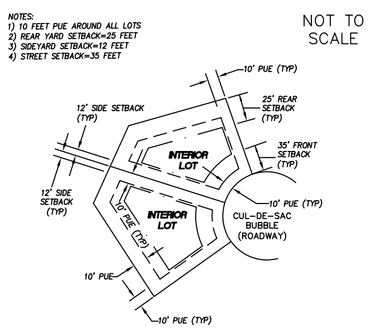

KNUCKLE AND CUL-DE-SAC LOTS

PLAT NOTES

1) Plat must be recorded within 24 months of final plat approval by City Council. Final plat approval was granted on the _____day of _____, 20_____.
2) The installation of improvements shall conform to all city rules, ordinances, requirements, standards, and policies regarding the development of this property.
3) Prior to building permits being issued, soil studies may be required on each lot as determined by the city building official.
4) Plat may be subject to a master development agreement, development agreement, subdivision agreement, or site plan agreement. See City Recorder for more information.
5) Building permits will not be issued until all improvements have been installed and accepted by the city in writing; all improvements currently meet city standards, and bonds are posted by the current owner of the project pursuant to city code.
6) All bonds and bond agreements are between the city, developer/owner and financial institution. No other party, including unit or lot owners, shall be deemed a third-party beneficiary or have any rights, including the right to bring any action under any bond or bond agreement.
7) The owner of this subdivision and any successors and assigns are responsible for ensuring that impact and connection fees are paid and water rights are secured for each individual lot. No building permits shall be issued for any lot in this subdivision until all impact and connection fees, at the rates in effect when applying for building permit, are paid in full and water rights secured as specified by current city ordinances and fee schedules.
8) All open space and trail improvements located herein are to be installed by owner and maintained by Home Owners Association (HOA) unless specifies otherwise on each improvement.
9) Any reference herein to owners, developers, or contractors shall apply to successors, agents, and assigns.
10) Lots area subject to Home Owners Association Bylaws, Articles of Incorporation and CC&R's.
11)) All pedestrian corridors and medians are to be installed by the developer and maintained by the HOA.
12) Lots shall be subject to Health Department wastewater requirements in place at the the time of building permit application; preliminary percolation subdivision feasibility tests are not guarantee that lots will be eligible for septic permit.
13) Surface drainage ditches shown on the project improvement plans, and existing surface drainage ditches shall be maintained in open conditions at all times for flood control purposes. Ditches to be maintained by the HOA.
14) NO septic system may be located within 100' of the compromise line of Utah Lake.
15) All lots adjacent to undeveloped land are subject to City Wild Land Urban Interface requirements and 30' buffer regulations.
16) NO city maintenance provided on streets.
17) A blanket public utility easement is on all streets for public utilities within roadway private right of way.

CURVE TABLE					
CURVE	LENGTH	RADIUS	CHORD DIST.	CHORD BRG.	DELTA
C1	13.96'	15.00'	13.46'	S84°55'02"W	53°18'40"
C2	60.18'	1000.00'	60.17'	S66°42'12"E	3°26'53"
C3	62.82'	1000.00'	62.81'	S66°46'45"E	3°35'59"
C4	14.88'	15.00'	14.28'	S40°09'38"E	56°50'12"
C5	29.06'	972.00'	29.06'	S69°26'07"E	1°42'46"
C6	144.54'	1000.00'	144.41'	N72°34'05"W	8°16'53"
C7	148.58'	1028.00'	148.45'	N72°34'05"W	8°16'53"
C8	190.59'	972.00'	190.29'	S75°54'32"E	11°14'05"
C9	22.68'	15.00'	20.58'	N33°23'38"W	86°37'46"
C11	41.38'	503.00'	41.37'	N12°16'39"E	4°42'49"
C12	43.03'	503.00'	43.02'	N12°11'00"E	4°54'07"
C13	23.26'	15.00'	21.00'	S54°08'55"W	88°49'57"
C14	103.48'	531.00'	103.32'	N4°20'16"E	11°09'56"
C16	357.29'	503.00'	349.82'	N10°37'00"W	40°41'52"
C17	180.62'	503.00'	179.65'	N0°21'59"W	20°34'27"
C18	150.66'	1000.00'	150.51'	S85°45'07"E	8°37'55"
C19	130.91'	1028.00'	130.82'	N85°05'00"W	7°17'46"
C20	23.98'	1028.00'	23.98'	N89°23'59"W	1°20'12"
C21	20.32'	15.00'	18.80'	N51°07'08"E	77°37'35"
C22	23.59'	15.00'	21.23'	N45°01'26"W	90°05'19"

CURVE TABLE					
CURVE	LENGTH	RADIUS	CHORD DIST.	CHORD BRG.	DELTA
C23	218.59'	55.00'	100.60'	S53°50'13"E	227°42'54"
C24	80.23'	55.00'	73.31'	N89°21'56"E	83°34'55"
C25	33.86'	55.00'	33.32'	N29°56'24"E	35°16'08"
C26	104.50'	55.00'	89.48'	S5°35'19"W	108°51'51"
C27	68.23'	319.00'	68.10'	S6°06'25"E	12°15'17"
C28	109.31'	376.53'	108.92'	N8°19'48"W	16°37'58"
C29	187.66'	347.00'	185.38'	S15°28'21"E	30°59'10"
C30	104.29'	319.00'	103.82'	S21°36'00"E	18°43'52"
C31	93.50'	373.22'	93.25'	N23°49'23"W	14°21'12"
C32	23.44'	15.00'	21.12'	S75°43'23"E	89°30'56"
C33	23.69'	15.00'	21.30'	N14°16'37"E	90°29'04"
C34	23.80'	15.01'	21.39'	S14°03'10"W	90°53'25"
C36	13.64'	15.00'	13.17'	N33°28'09"E	52°06'00"
C37	13.64'	15.00'	13.17'	S85°34'09"W	52°06'00"
C38	69.81'	55.00'	65.22'	S75°15'19"W	72°43'39"
C39	67.52'	55.00'	63.36'	S3°43'24"W	70°20'11"
C40	135.48'	55.00'	103.73'	N77°59'14"E	141°08'10"
C41	56.57'	60.00'	54.50'	S85°16'24"W	54°01'24"
C43	72.81'	80.00'	70.32'	S79°13'18"W	52°08'34"
C45	31.15'	80.00'	30.95'	S0°34'35"E	22°18'31"

CURVE TABLE					
CURVE	LENGTH	RADIUS	CHORD DIST.	CHORD BRG.	DELTA
C46	137.91'	80.00'	121.46'	S59°57'49"W	98°46'17"
C47	54.79'	79.92'	53.72'	N51°01'56"W	39°16'46"
C48	37.24'	328.00'	37.22'	S56°16'00"W	6°30'17"
C50	40.42'	356.00'	40.39'	N56°16'00"E	6°30'17"
C52	23.28'	444.00'	23.27'	N54°30'58"E	3°00'13"
C53	144.91'	972.00'	144.77'	S85°47'50"E	8°32'30"
C54	125.49'	500.00'	125.16'	S60°12'16"W	14°22'49"
C55	218.10'	444.00'	215.91'	N70°05'24"E	28°08'39"
C56	256.59'	472.00'	253.45'	N68°35'18"E	31°08'52"
C57	256.59'	472.00'	253.45'	N68°35'18"E	31°08'52"
C58	151.45'	500.00'	150.88'	S76°04'20"W	17°21'19"
C59	13.85'	15.00'	13.37'	S58°17'25"W	52°55'10"
C60	44.31'	472.00'	44.29'	N86°51'05"E	5°22'43"
C61	44.31'	472.00'	44.29'	N86°51'05"E	5°22'43"
C62	23.13'	15.00'	20.91'	S51°39'46"E	88°21'00"
C63	39.73'	328.00'	39.70'	S4°01'04"E	6°56'23"
C64	67.29'	328.00'	67.17'	N6°25'29"W	11°45'13"
C65	19.32'	15.00'	18.01'	N24°36'07"E	73°48'25"
C66	57.24'	55.00'	54.69'	N31°41'28"E	59°37'43"
C67	112.79'	55.00'	94.04'	S56°52'12"E	117°29'55"

CURVE TABLE					
CURVE	LENGTH	RADIUS	CHORD DIST.	CHORD BRG.	DELTA
C68	31.25'	55.00'	30.83'	S48°06'25"W	32°33'10"
C69	145.88'	356.00'	144.86'	S19°13'36"E	23°28'40"
C70	134.40'	328.00'	133.46'	S19°13'36"E	23°28'40"
C71	24.99'	15.00'	22.20'	S79°07'54"E	95°26'10"
C72	106.84'	328.00'	106.37'	N21°38'01"W	18°39'50"
C73	97.72'	300.00'	97.29'	N21°38'01"W	18°39'50"
C74	22.28'	475.00'	22.28'	S29°37'18"E	2°41'16"
C75	87.91'	503.00'	87.80'	N25°57'31"W	10°00'49"
C76	92.80'	531.00'	92.69'	N25°57'31"W	10°00'49"
C77	22.05'	15.00'	20.12'	N63°03'40"W	84°13'07"
C78	22.38'	15.00'	20.36'	N32°05'17"E	85°28'59"
C79	39.65'	503.00'	39.64'	N12°54'43"W	4°31'01"
C80	50.61'	300.00'	50.55'	S69°59'47"W	9°39'59"
C81	50.75'	503.00'	50.73'	N18°03'40"W	5°46'53"
C82	315.12'	475.00'	309.37'	S9°16'22"E	38°00'36"
C83	87.20'	531.00'	87.10'	N5°56'57"W	9°24'31"
C84	43.87'	260.00'	43.81'	S69°59'47"W	9°39'59"
C85	55.34'	328.00'	55.27'	N69°59'47"E	9°39'59"
C86	8.65'	40.00'	8.63'	N71°21'33"E	12°23'32"
C87	12.87'	40.00'	12.82'	S55°56'32"W	18°26'29"

CURVE TABLE					
CURVE	LENGTH	RADIUS	CHORD DIST.	CHORD BRG.	DELTA
C88	191.27'	3380.00'	191.24'	S29°20'40"E	3°14'32"
C89	430.74'	3440.00'	430.46'	N27°22'42"W	7°10'28"
C90	145.94'	3350.00'	145.92'	S29°43'03"E	2°29'46"
C91	231.96'	3380.00'	231.92'	S25°45'26"E	3°55'56"
C92	174.29'	3350.00'	174.27'	S25°45'48"E	2°58'51"
C93	375.06'	1000.00'	372.86'	S79°19'25"E	21°29'21"
C94	65.13'	60.04'	61.99'	S36°36'49"E	62°09'30"
C95	55.92'	60.00'	53.92'	N21°11'14"E	53°23'56"
C96	126.05'	60.00'	104.12'	S71°55'40"E	120°22'16"
C97	42.21'	1000.00'	42.20'	S77°55'04"E	2°25'06"
C98	40.30'	1000.00'	40.30'	S80°16'53"E	2°18'33"
C99	15.71'	15.00'	15.00'	S30°01'14"W	60°00'00"

SURVEYOR'S CERTIFICATE

I, _____, do hereby certify that I am a registered Land Surveyor and that I hold a license, Certificate No. _____, in accordance with the Professional Engineers and Land Surveyors Licensing Act found in Title 58, Chapter 22 of the Utah Code. I further certify that by authority of the owners, I have made a survey of the tract of land shown on this plat and described below, have subdivided said tract of land into lots, streets, and easements, have completed a survey of the property described on this plat in accordance with Utah Code Section 17-23-17, have verified all measurements, and have placed monuments as represented on the plat. I further certify that every existing right-of-way and easement grant of record for underground facilities, as defined in Utah Code Section 54-8a-2, and for other utility facilities, is accurately described on this plat, and that this plat is true and correct. I also certify that I have filed, or will file within 90 days of the recordation of this plat, a map of the survey I have completed with the Utah County Surveyor.

BOUNDARY DESCRIPTION

COMMENCING N 78°05' 45" E 71.64 FEET and N 00°36' 40" E 2,232.16 FEET and ALONG A CURVE TO LEFT (CHORD BEARS: N 11°36' 00" W 498.39 FEET, RADIUS = 1,178.14 FEET) & N 00°18' 06" E 1,227.38 FEET and S 89°59' 08" W 713.02 FEET and N 31°14' 56" W 424.75 FROM THE W 1/4 COR. SEC. 29, T6S, R1E, SLB&M.; and RUNNING THENCE N 31 °14' 56" W 623.47 FEET; THENCE N 25 °01' 05" W 938.84 FEET; THENCE N 89 °55' 55" E 1,660.92 FEET; THENCE S 00° 01' 14" W 429.14 FEET; THENCE N 89° 41' 49" E 584.73 FEET; THENCE S 08°24' 55" E 968.15 FEET; THENCE S 89° 55' 55" W 1,666.71 FEET TO BEG. AREA CONTAINS 56.47 AC.

SURVEYOR NAME | LICENSE No. | DATE:

OWNER'S DEDICATION

Know all men by these presents that _____, the _____undersigned owner(s) of the above described tract of land having caused same to be subdivided into lots and streets to be hereafter known as

SAIL HOUSE PHASE 1

do hereby dedicate for the perpetual use of the public and/or City all parcels of land, easements, right-of-way, and public amenities shown on this plat as intended for public and/or City use. The owner(s) voluntarily defend, indemnify, and save harmless the City against any easements or other encumbrance on a dedicated street which will interfere with the City's use, maintenance, and operation of the street. The owner(s) voluntarily defend, indemnify, and hold harmless the City from any damage claimed by persons within or without this subdivision to have been caused by alterations of the ground surface, vegetation, drainage, or surface or sub-surface water flows within this subdivision or by establishment or construction of the roads within this subdivision.
In witness whereof _____have hereunto set _____this day of_____ , A.D. 20_____

_____ _____
_____ _____

OWNER'S ACKNOWLEDGEMENT

STATE OF UTAH } S.S.
County of Utah }

On the _____day of _____, A.D. 20_____ , personally appeared before me, the undersigned Notary Public, in and for the County of Utah in said State of Utah, the signer( ) of the above Owner's dedication, _____in number, who duly acknowledged to me that_____signed it freely and voluntarily and for the uses and purposes therein mentioned.
My commission expires: Notary Public residing at

MY COMMISSION EXPIRES:_____ _____
NOTARY PUBLIC
RESIDING IN _____ COUNTY

ACKNOWLEDGMENT (CORPORATE)

STATE OF UTAH } S.S.
COUNTY OF UTAH }

ON THE_____DAY OF_____A.D. 20_____,
PERSONALLY APPEARED BEFORE ME_____ AND, WHO BEING BY ME DULY SWORN DID SAY EACH FOR HIMSELF, THAT HE, THE SAID_____IS THE PRESIDENT AND HE THE SAID IS THE SECRETARY OF_____CORPORATION, AND THAT THE WITHIN AND FOREGOING INSTRUMENT WAS SIGNED IN BEHALF OF SAID CORPORATION BY AUTHORITY OF A RESOLUTION OF ITS BOARD OF DIRECTORS AND SAID _____ AND _____ EACH DULY ACKNOWLEDGE TO ME THAT SAID CORPORATION EXECUTED THE SAME AND THAT THE SEAL AFFIXED IS THE SEAL OF SAID CORPORATION.
MY COMMISSION EXPIRES: NOTARY PUBLIC

APPROVAL BY LEGISLATIVE BODY

THE CITY COUNCIL OF CITY OF SARATOGA SPRINGS, COUNTY OF UTAH, APPROVES THIS SUBDIVISION SUBJECT TO THE CONDITIONS AND RESTRICTIONS STATED HEREON AND HEREBY ACCEPTS THE DEDICATION OF ALL STREETS, EASEMENTS, AND OTHER PARCELS OF LAND INTENDED FOR PUBLIC PURPOSES FOR THE PERPETUAL USE OF THE PUBLIC
THIS _____ DAY OF_____ A.D. 20 .

_____ _____
_____ _____
_____ _____
CITY MAYOR ATTEST _____
CITY RECORDER (SEE SEAL BELOW)

QUESTAR GAS COMPANY

APPROVED THIS _____ DAY OF _____, A.D. 20____.

QUESTAR GAS COMPANY

ROCKY MOUNTAIN POWER

APPROVED THIS _____ DAY OF _____,A.D. 20____.

ROCKY MOUNTAIN POWER

COMCAST CABLE TELEVISION

APPROVED THIS _____ DAY OF _____,A.D. 20____.

COMCAST CABLE TELEVISION

QWEST

APPROVED THIS _____ DAY OF _____,A.D. 20____.

QWEST

NOTE: BY SIGNING THIS PLAT THE FOLLOWING UTILITY COMPANIES ARE "APPROVING" (per UTAH CODE 10-9A-603(4)(C)(ii)) THE (A) BOUNDARY COURSE, DIMENSIONS, AND INTENDED USE OF THE RIGHT-OF-WAY AND EASEMENTS GRANTS OF RECORD (B) LOCATION OF EXISTING UNDERGROUND AND UTILITY FACILITIES (C) CONDITIONS OR RESTRICTIONS GOVERNING THE LOCATION OF THE FACILITIES WITHIN THE RIGHT-OF-WAY, AND EASEMENT GRANTS OF RECORD, AND UTILITY FACILITIES WITHIN THE SUBDIVISION. "Approving" shall have the meaning in Utah Code Section 10-9a-603(4)(c)(ii)

SURVEYOR OF RECORD:

BROMAC
Land Surveying
9229 South Redwood Road, Suite A
West Jordan, UT 84088
Phone (801) 859-2416 email BROMAC@LIVE.COM

FIRE CHIEF APPROVAL

APPROVED BY THE FIRE CHIEF ON THIS _____ DAY OF _____,A.D. 20____.

CITY FIRE CHIEF

PREPARED FOR

Western States Ventures
362 W Pierpont
SLC, UT 84101

NOTE: Drainage Easement areas are perpetual, non-exclusive, mutual cross drainage easements for purposes of storm water capture and conveyance on, over, upon, and across the areas delineated as Drainage Easements. Each lot encumbered by a drainage easement shall, at its sole cost and expense, maintain and keep all above and below grade infrastructure and appurtenances in a reasonable condition and state of repair. No obstructions or changes in grade shall be located within the easement area that will impede, divert, or cause the runoff to have an adverse effect on adjoining property.

BASIS OF BEARINGS

THE PROJECT BASIS OF BEARINGS IS S 00°18'06" e 2693.13 ALONG THE SECTION LINE BETWEEN THE EAST QUARTER AND SOUTH EAST CORNERS OF SECTION 19, TOWNSHIP 6 SOUTH, RANGE 1 EAST, SALT LAKE BASE & MERIDIAN

SAIL HOUSE PHASE 1

LOCATED IN THE SOUTHEAST QUARTER OF SECTION 12
TOWNSHIP 6 SOUTH, RANGE 1 WEST, SALT LAKE BASE AND MERIDIAN.
SARATOGA SPRINGS CITY, UTAH COUNTY, UTAH

PROJECT ENGINEER:

GATEWAY CONSULTING, inc.
P.O. BOX 951005 SOUTH JORDAN, UT 84095
PH: (801) 694-5848 FAX: (801) 432-7050
paul@gatewayconsultingllc.com

CIVIL ENGINEERING • CONSULTING • LAND PLANNING
CONSTRUCTION MANAGEMENT

PLANNING COMMISSION REVIEW

REVIEWED BY THE PLANNING COMMISSION ON THIS _____ DAY OF _____,A.D. 20____.

CHAIRMAN, PLANNING COMMISSION

SARATOGA SPRINGS ENGINEER APPROVAL

APPROVED BY THE CITY ENGINEER ON THIS _____ DAY OF _____,A.D. 20____.

CITY ENGINEER

SARATOGA SPRINGS ATTORNEY

APPROVED BY SARATOGA SPRINGS ATTORNEY ON THIS _____ DAY OF _____,A.D. 20____

SARATOGA SPRINGS ATTORNEY

LEHI CITY POST OFFICE

APPROVED BY POST OFFICE REPRESENTATIVE ON THIS _____ DAY OF _____, A.D. 20____.

LEHI CITY POST OFFICE

SURVEYOR'S SEAL	NOTARY PUBLIC SEAL	CITY ENGINEER'S SEAL	CLERK-RECORDER SEAL

Date: SEPT 20, 2014
File: Sail House

SAIL HOUSE PHASE 1

LOCATED IN
EAST 1/2 OF SECTION 19 TOWNSHIP 6 SOUTH, RANGE 1 EAST/
AND SOUTHWEST 1/4 OF SECTION 20, TOWNSHIP 6 SOUTH, RANGE 1 EAST
SALT LAKE BASE AND MERIDIAN
SARATOGA SPRINGS, UTAH

LAND SOLUTIONS PARTNERS
HARBOR POINT LLC
16-003-0034
670 W Shepard Lane
Farmington, Ut 84025

LIGHTHOUSE COVE
DEVELOPMENT, INC.
16-003-0008
1626 Park PL
Park City Ut
PO Box 981014

Found Existing 5/8" Rebar & Cap 0.21' West of Property Corner

Found Existing 5/8" rebar With melted cap @ Property Corner

N 89°55'55" E 1660.92'

LIGHTHOUSE COVE DEVELOPMENT, INC.
16-004-0003

S 0°01'14" W 429.14'

EAST QUARTER CORNER
SECTION 19, FOUND BRASS CAP SET IN CONCRETE
BENCHMARK ELEV: 4527.77

N 89°41'49" E 584.73'

Not Found

CENTER 1/4 SECTION 19, NOT FOUND T6S, R1E, SLB&M

EAST 1/4 CORNER SECTION 19, FOUND BRASS CAP IN CONCRETE T6S, R1E, SLB&M BENCHMARK ELEV: 4520.01

S89°56'55"W 2,642.35' 1/4 SECTION LINE

SOUTH 1/4 CORNER SECTION 19, NOT FOUND T6S, R1E, SLB&M

N89°57'38"W 2,641.07' (CALC) SECTION LINE

SOUTHEAST 1/4 CORNER SECTION 19, NOT FOUND T6S, R1E, SLB&M

WEST 1/4 CORNER SECTION 29, FOUND BRASS CAP IN CONCRETE T6S, R1E, SLB&M BENCHMARK ELEV: XXXX

WESTERN STATES

EXISTING UDOT BOUNDARY

CL REDWOOD ROAD

N 25°05'05" W 988.84'

Redwood Road (Utah Hwy 68)

Private road RIGGING COURT

Private road RIGGING DRIVE

Private road SAIL HOUSE DRIVE

Private road MOORING DRIVE

Private road REGATTA AVE

Private road ASTERN COURT

Private road REGATTA COURT

Private road ASTERN WAY

1/4 SECTION LINE

Parcel D OPEN SPACE 1.07 ac. dedicated by city maintained by city

Parcel F Redwood Road dedicated by UDOT maintained by UDOT

Parcel C detention/ OPEN SPACE 5.87 ac dedicated by HOA maintained by HOA w/ public trail easement

DETENTION POND

Parcel B detention/ OPEN SPACE 0.34 ac dedicated by HOA maintained by HOA

Utah Lake

Shoreline trail (public)

100 YR FLOOD ELEVATION

75' DRAINAGE CORRIDOR/TRAIL

public trail

semi private fence

30' DRIVEWAY

NO DRIVEWAY ACCESS

PERC TEST LOCATION SOIL EXPLORATION HOLE

SEWER SETBACK OF HIGH WATER MARK

1	44055 sq. ft.	1.01 ac.
2	43564 sq. ft.	1.00 ac.
3	43584 sq. ft.	1.00 ac.
4	52809 sq. ft.	1.21 ac.
5	43664 sq. ft.	1.00 ac.
6	43584 sq. ft.	1.00 ac.
7	43562 sq. ft.	1.00 ac.
8	43560 sq. ft.	1.00 ac.
9	43562 sq. ft.	1.00 ac.
10	44827 sq. ft.	1.03 ac.
11	43564 sq. ft.	1.00 ac.
12	45361 sq. ft.	1.04 ac.
13	43668 sq. ft.	1.00 ac.
14	43575 sq. ft.	1.00 ac.
15	44057 sq. ft.	1.01 ac.
16	43581 sq. ft.	1.00 ac.
17	44151 sq. ft.	1.01 ac.
18	43721 sq. ft.	1.00 ac.
19	52990 sq. ft.	1.22 ac.
20	44464 sq. ft.	1.02 ac.
21	43671 sq. ft.	1.00 ac.
22	43781 sq. ft.	1.01 ac.
23	46200 sq. ft.	1.06 ac.
24	43742 sq. ft.	1.00 ac.
25	44005 sq. ft.	1.01 ac.
26	43835 sq. ft.	1.01 ac.
27	43772 sq. ft.	1.00 ac.
28	43784 sq. ft.	1.01 ac.
29	43688 sq. ft.	1.00 ac.
30	43727 sq. ft.	1.00 ac.
31	45428 sq. ft.	1.04 ac.
32	43568 sq. ft.	1.00 ac.
33	43560 sq. ft.	1.00 ac.
34	43560 sq. ft.	1.00 ac.
35	43560 sq. ft.	1.00 ac.
36	43560 sq. ft.	1.00 ac.
37	43560 sq. ft.	1.00 ac.
38	43560 sq. ft.	1.00 ac.
39	43561 sq. ft.	1.00 ac.
40	43564 sq. ft.	1.00 ac.
41	43609 sq. ft.	1.00 ac.

POB

N 4°14'56" W 684.47'

713.02' S89°59'08"W

N 0°18'06" E 1227.38'

Δ=24°42'24" L=1778.14' R=498.79' CHORD N 12°03'06" W 1765.39'

N 0°36'40" E 2232.16'

N 78°05'45" E 71.64'

WEST 1/4 CORNER SECTION 29, FOUND BRASS CAP IN CONCRETE T6S, R1E, SLB&M

POB TO TO SECTION CORNER

9.96' Deed Overlap

Adjusted Location of Point of Beginning

Deed Location of Point of Beginning

S 89°55'55" W 1666.71'

SECTION LINE BASIS OF BEARINGS N 0°18'06" E 5,279.12'

IRECO INCORPORATED
16-006-0011

TAYLOR, MAE MENDENHALL
16-005-0015
2954 E Marley Pl
SLC, UT 84109

S 0°24'55" E 968.15'

N36°45'29"E 31.71'

LEGEND

- PUBLIC TRAILS
- SECTION LINE
- CENTER LINE
- P.U.E. LINE
- SETBACK LINE
- 30% SLOPE
- REBAR AND CAP TO BE SET
- NEW FIRE HYDRANT
- NEW STREETLIGHT
- EXISTING FIRE HYDRANT
- 3165 S 490 W MONUMENT

80 0 80 160
SCALE IN FEET
1"=80' (24"x36" SIZE ONLY)

SURVEYOR:
BROMAC
Land Surveying
9229 South Redwood Road, Suite A
West Jordan, UT 84088
Phone (801) 859-2416 email BROMAC@LIVE.COM

PROJECT ENGINEER
GATEWAY CONSULTING, inc.
P.O. BOX 951005 SOUTH JORDAN, UT 84095
PH: (801) 694-5848 FAX: (801) 432-7050
paul@gatewayconsultingllc.com

CIVIL ENGINEERING • CONSULTING • LAND PLANNING
CONSTRUCTION MANAGEMENT

Date: SEPT 20, 2014
File: SAIL HOUSE

INSTALL POWER POLE AND DROP

Found Existing 5/8" Rebar & Cap 0.21' West of Property Corner

LAND SOLUTIONS PARTNERS
HARBOR POINT LLC
16-003-0034

LIGHTHOUSE COVE DEVELOPMENT, INC.
16-003-0008

N 89°55'55" E 1660.92'

KEEP FENCE ON PROPERTY LINE

Found Existing 5/8" rebar With melted cap @ Property Corner

EX POWER POLE TO REMAIN
DROP POWER BELOW GROUND

REMOVE EX WELL

REMOVE EX PROPANE

REMOVE EX TREES

R/R EX POWER POLE
BURY POWERLINE

REMOVE ALL STRUCTURES
REMOVE ALL FENCES

REMOVE FENCE

REMOVE EX SEPTIC TANK

REMOVE EX FENCE

REMOVE EX DRIVEWAY

REMOVE EX FENCE

S 0°00'14" W 429.14'

LIGHTHOUSE COVE
DEVELOPMENT, INC.
16-004-0003

Not Found

benchmark elev: 4527.77

N 89°41'49" E 584.73'

Mail Box

tele box

N 25°01'05" W 938.88'

R/R EX POWER POLE
BURY POWERLINE

REMOVE OVERHEAD POWER,
POWER TO BE BURIED

R/R EX TREES
TYP ALONG ALL SHORE

NO DISTRUBANCE
BELOW 4497.7 ELEV

REMOVE EX
Transformer Assembly

IRECO INCORPORATED
16-006-0011

100 YR WATER
ELEV 4497.7

EXISTING CANAL TO BE FILLED IN

NO DISTRUBANCE
BELOW 4497.7 ELEV

R/R EX POWER POLE
BURY POWERLINE

PROPOSED POWER TRANSFORMER
LOCATION

PROPOSED POWER CONDUIT
LOCATION

30% SLOPE

S 08°24'55" E 968.15'

REMOVE FENCE

R/R EX TREES

Exception #14
Blanket easement for
power company

R/R EX POWER POLE
BURY POWERLINE

R/R EX TREES

N 31°45'56" W 623.47'

NO DISTRUBANCE
BELOW 4497.7 ELEV

EXISTING CANAL TO BE FILLED IN

EX POWER POLE TO REMAIN
DROP POWER BELOW GROUND

R/R EX TREES

Found Existing 5/8" Rebar & Cap 0.51' East & 0.84' North of Property Corner

KEEP FENCE ON PROPERTY LINE

S 89°55'55" W 1666.71'

9.96' Deed Overlap

INSTALL POWER POLE
AND DROP

Adjusted Location of
Point of Beginning

TAYLOR MAE MENDENHALL

80 0 80 160
SCALE IN FEET
1"=80' (24"x36" SHEET ONLY)

LEGEND

- EXISTING SEWER LINE
- EXISTING STORM LINE
- EXISTING WATER LINE
- EXISTING IRRIGATION LINE
- EXISTING CONCRETE (CRT)
- EXISTING EDGE OF ASPHALT
- EXISTING FENCE
- EXISTING OVERHEAD POWER
- 10' FINISH CONTOUR
- 2' FINISH CONTOUR
- PHASE LINE
- CURB & GUTTER
- PROPOSED TRAIL
- PUE
- SETBACK
- 30% SLOPE AND GREATER
- PROPOSED OPEN SPACE
- DRAINAGE DIRECTION

NO.	DESCRIPTION	DATE	APP'D

T=1:12

ORIG. DATE:
SURVEY BY:
DRAWN BY : GPW
DESIGNED BY : GPW
CHECKED BY : GPW
SCALE : 1"=80'

GATEWAY CONSULTING, inc.
P.O. BOX 951005 SOUTH JORDAN, UT 84095
PH: (801) 694-5848 FAX: (801) 432-7050
paul@gatewayconsultingllc.com
CIVIL ENGINEERING • CONSULTING LAND PLANNING
CONSTRUCTION MANAGEMENT

SAIL HOUSE

EXISTING/DEMOLITION PLAN

DRAWING FILE
PROJECT NUMBER
9-10-14 PLOT DATE

SARATOGA CITY

PRELIMINARY
NOT FOR
CONSTRUCTION

SHEET NO. 2

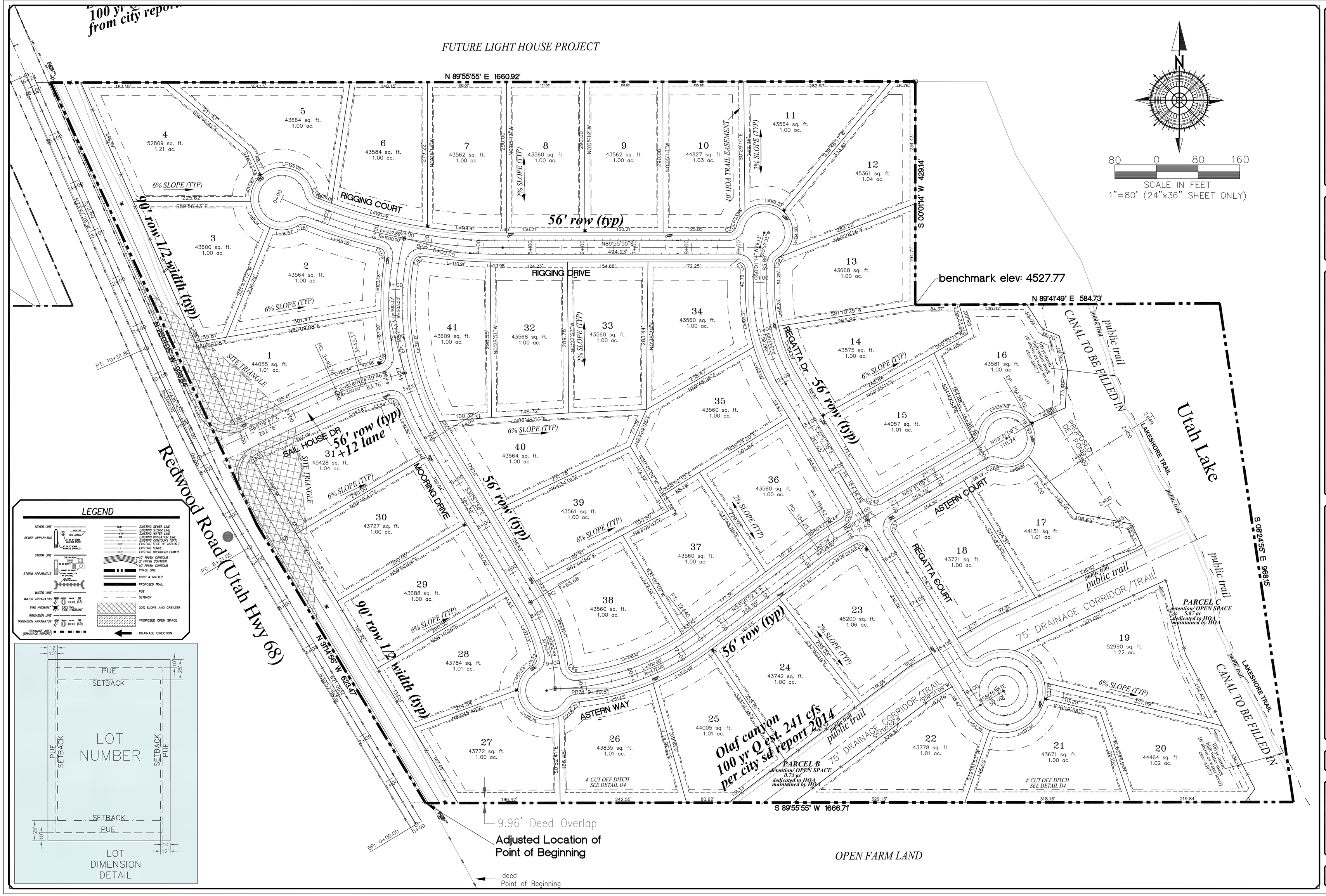

NO.	DESCRIPTION	DATE	APP'D

ORIG. DATE: 01-1-12
SURVEY BY:
DRAWN BY: GPW
DESIGNED BY: GPW
CHECKED BY: GPW
SCALE: 1"=80'

GATEWAY CONSULTING, inc.
P.O. BOX 951005 SOUTH JORDAN, UT 84095
PH: (801) 694-5848 FAX: (801) 432-7050
paul@gatewayconsultingllc.com
CIVIL ENGINEERING • CONSULTING • LAND PLANNING
CONSTRUCTION MANAGEMENT

SAIL HOUSE

OVERALL SITE PLAN

9-20-14
PLOT DATE
PROJECT NUMBER
DRAWING FILE

SARATOGA
CITY

PRELIMINARY NOT FOR CONSTRUCTION

SHEET NO. 3

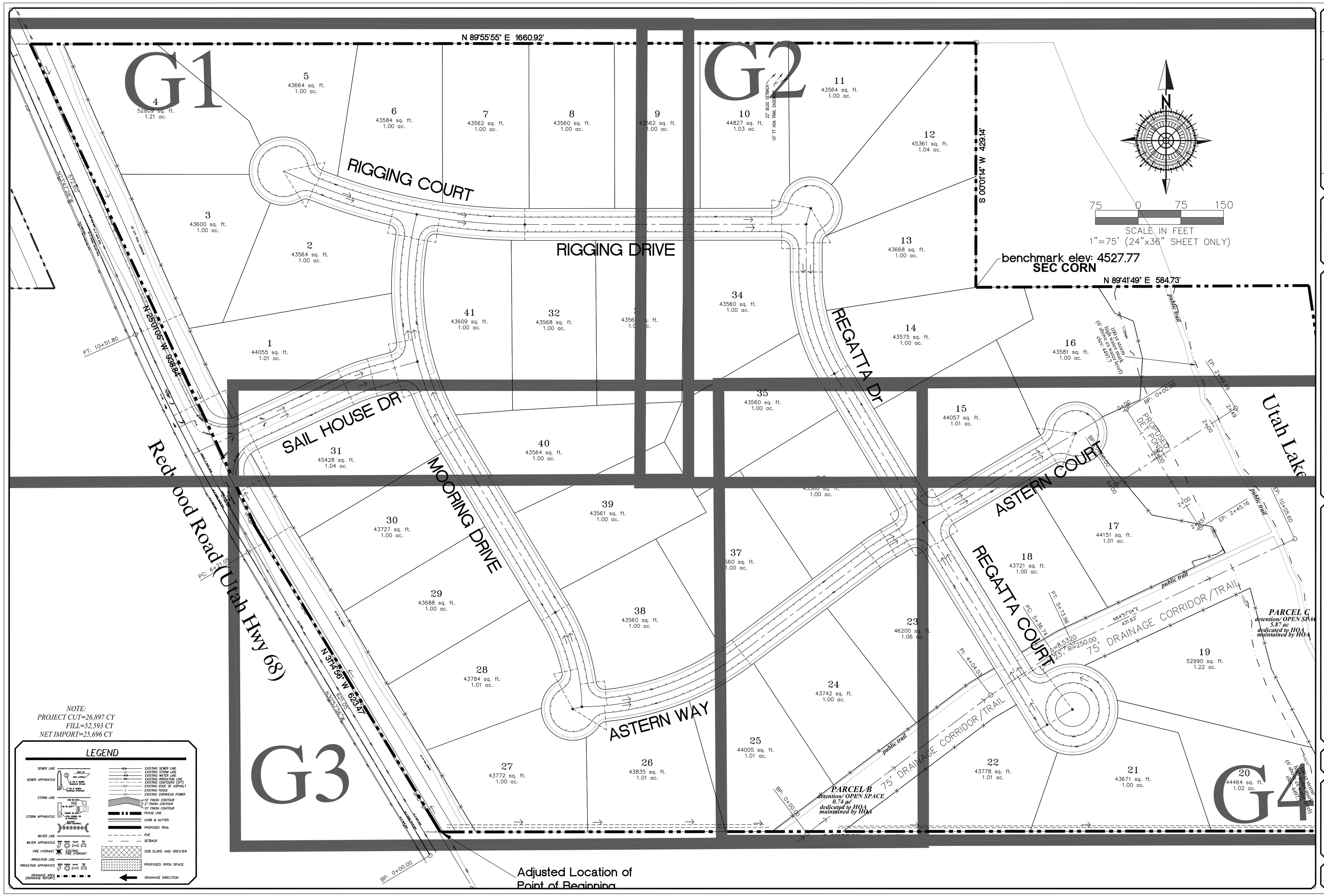

NOTE:
PROJECT CUT=26,897 CY
FILL=52,593 CY
NET IMPORT=25,696 CY

LEGEND

SEWER LINE	EXISTING SEWER LINE
SEWER APPARATUS	EXISTING STORM LINE
	EXISTING WATER LINE
	EXISTING IRRIGATION LINE
	EXISTING CONTOURS (2FT)
	EXISTING EDGE OF ASPHALT
	EXISTING FENCE
	EXISTING OVERHEAD POWER
STORM LINE	10' FINISH CONTOUR
	2' FINISH CONTOUR
STORM APPARATUS	10' FINISH CONTOUR
	PHASE LINE
	CURB & GUTTER
	PROPOSED TRAIL
WATER LINE	PVC
WATER APPARATUS	SETBACK
FIRE HYDRANT	30% SLOPE AND GREATER
IRRIGATION LINE	PROPOSED OPEN SPACE
IRRIGATION APPARATUS	
DRAINAGE AREA (DRAINAGE REPORT)	DRAINAGE DIRECTION

NO.	DESCRIPTION	DATE	APP'D

ORIG DATE: 1-1-12
SURVEY BY:
DRAWN BY: GPW
DESIGNED BY: GPW
CHECKED BY: GPW
SCALE: 1"=75'

GATEWAY CONSULTING, Inc.
P.O. BOX 951005 SOUTH JORDAN, UT 84095
PH: (801) 694-5848 FAX: (801) 432-7050
paul@gatewayconsultingllc.com
CIVIL ENGINEERING • CONSULTING • LAND PLANNING
CONSTRUCTION MANAGEMENT

SAIL HOUSE
GRADING SHEET INDEX
DRAWING FILE
PROJECT NUMBER
PLOT DATE: 9-20-14

SARATOGA
CITY

PRELIMINARY
NOT FOR
CONSTRUCTION

SHEET NO. G

Redw

EAST QUARTER CORNER
SECTION 19, FOUND BRASS
CAP SET IN CONCRETE
BENCHMARK ELEV: 4527.77

LEGEND

- SEWER LINE
- SEWER APPARATUS
- STORM LINE
- STORM APPARATUS
- WATER LINE
- WATER APPARATUS
- FIRE HYDRANT
- IRRIGATION LINE
- IRRIGATION APPARATUS
- DRAINAGE PIPE (DRAINAGE BOX ONLY)
- EXISTING SEWER LINE
- EXISTING STORM LINE
- EXISTING WATER LINE
- EXISTING CONTOURS (2FT)
- EXISTING EDGE OF ASPHALT
- EXISTING OVERHEAD POWER
- 10' FINISH CONTOUR
- 2' FINISH CONTOUR
- PHASE LINE
- CURB & GUTTER
- PROPOSED TRAIL
- PIPE
- SETBACK
- 30% SLOPE AND GREATER
- DRAINAGE DIRECTION
- PROPOSED OPEN SPACE
- EXISTING FIRE HYDRANT

SCALE IN FEET
1"=40' (24"x36" SHEET ONLY)
40 0 40 80

N

REDWOOD ROAD

SAIL HOUSE DR

RIGGING COURT

RIGGING DRIVE

MOORING DRIVE

1 44055 sq. ft. 1.01 ac.
2 43564 sq. ft. 1.00 ac.
3 43600 sq. ft. 1.00 ac.
4 52809 sq. ft. 1.21 ac.
5 43664 sq. ft. 1.00 ac.
6 43584 sq. ft. 1.00 ac.
7 43562 sq. ft. 1.00 ac.
8 43560 sq. ft. 1.00 ac.
9 43562 sq. ft. 1.00 ac.
31 45428 sq. ft. 1.04 ac.
32 43568 sq. ft. 1.00 ac.
33 43560 sq. ft. 1.00 ac.
40 43564 sq. ft. 1.00 ac.
41 43609 sq. ft. 1.00 ac.

SHEET NO. G1

PRELIMINARY NOT FOR CONSTRUCTION

SARATOGA CITY

SAIL HOUSE

40 SCALE GRADING

9-20-14 | PLOT DATE: | PROJECT NUMBER | DRAWING FILE

GATEWAY CONSULTING, Inc.
P.O. BOX 951005 SOUTH JORDAN, UT 84095
PH: (801) 694-5848 FAX: (801) 432-7050
paul@gatewayconsultingllc.com
CIVIL ENGINEERING • CONSULTING • LAND PLANNING
CONSTRUCTION MANAGEMENT

ORIG DATE:	1-1-12
SURVEY BY:	
DRAWN BY :	GPW
DESIGNED BY :	GPW
CHECKED BY :	GPW
SCALE :	1"=40'

NO.	DESCRIPTION	DATE	APP'D

@ Property Corner

EAST QUARTER CORNER
SECTION 19, FOUND BRASS
CAP SET IN CONCRETE
BENCHMARK ELEV: 4527.77

S 00°01'14" W 429.14'

LIGHTHOUSE COVE
DEVELOPMENT, INC.
16-004-0003

benchmark elev: 4527.77

N 89°41'49" E 584.73'

22' BLDG SETBACK

10' FT HOA TRAIL EASEMENT

9
43562 sq. ft.
1.00 ac.

10
44827 sq. ft.
1.03 ac.

11
43564 sq. ft.
1.00 ac.

12
45361 sq. ft.
1.04 ac.

13
43668 sq. ft.
1.00 ac.

33
560 sq. ft.
.00 ac.

34
43560 sq. ft.
1.00 ac.

35
43560 sq. ft.
1.00 ac.

36

1
43575 sq. ft.
1.00 ac.

15
44057 sq. ft.
1.01 ac.

16
43581 sq. ft.
1.00 ac.

REGATTA Dr

public trail

HIGH WATER MARK

100 yr storm high water mark (6' above ex water level) elev: 4497.7

Utah Lake

DET. BASIN 1

LEGEND

- SEWER LINE
- SEWER APPARATUS
- STORM LINE
- STORM APPARATUS
- WATER LINE
- WATER APPARATUS
- FIRE HYDRANT
- IRRIGATION LINE
- IRRIGATION APPARATUS
- DRAINAGE AREA (DRAINAGE REPORT)
- EXISTING SEWER LINE
- EXISTING STORM LINE
- EXISTING WATER LINE
- EXISTING IRRIGATION LINE
- EXISTING CONTOURS (2FT)
- EXISTING EDGE OF ASPHALT
- EXISTING FENCE
- EXISTING OVERHEAD POWER
- 10' FINISH CONTOUR
- 2' FINISH CONTOUR
- 10' FINISH CONTOUR
- PHASE LINE
- CURB & GUTTER
- PROPOSED TRAIL
- PUE
- SETBACK
- EXISTING FIRE HYDRANT
- 30% SLOPE AND GREATER
- PROPOSED OPEN SPACE
- DRAINAGE DIRECTION

N

40 0 40 80
SCALE IN FEET
1"=40' (24"x36" SHEET ONLY)

NO.	DESCRIPTION	DATE	APP'D

ORIG DATE: 1-1-12
SURVEY BY:
DRAWN BY: GPW
DESIGNED BY: GPW
CHECKED BY: GPW
SCALE: 1"=40'

GATEWAY CONSULTING, Inc.
P.O. BOX 951005 SOUTH JORDAN, UT 84095
PH: (801) 694-5848 FAX: (801) 432-7050
paul@gatewayconsultingllc.com

CIVIL ENGINEERING • CONSULTING • LAND PLANNING
CONSTRUCTION MANAGEMENT

SAIL HOUSE

40 SCALE GRADING

5-GRADE_GV
DRAWING FILE

PROJECT NUMBER

PLOT DATE: 9-20-14

SARATOGA CITY

PRELIMINARY
NOT FOR
CONSTRUCTION

SHEET NO. G2

EAST QUARTER CORNER
SECTION 19, FOUND BRASS
CAP SET IN CONCRETE
BENCHMARK ELEV: 4527.77

LEGEND

- SEWER LINE
- SEWER APPARATUS
- STORM LINE
- STORM APPARATUS
- WATER LINE
- WATER APPARATUS
- FIRE HYDRANT
- IRRIGATION LINE
- IRRIGATION APPARATUS
- DRAINAGE ARROW (DRAINAGE REQUIRED)
- EXISTING SEWER LINE
- EXISTING STORM LINE
- EXISTING WATER LINE
- EXISTING IRRIGATION LINE
- EXISTING EDGE OF ASPHALT
- EXISTING FENCE
- EXISTING OVERHEAD POWER
- 1' FINISH CONTOUR
- 10' FINISH CONTOUR
- PHASE LINE
- CURB & GUTTER
- PROPOSED TRAIL
- PUE
- SETBACK
- 30% SLOPE AND GREATER
- PROPOSED OPEN SPACE
- DRAINAGE DIRECTION

SCALE IN FEET
1"=40' (24"x36" SHEET ONLY)
40 0 40 80

Sail House

40 SCALE GRADING

9-20-14 — PLOT DATE: | PROJECT NUMBER | DRAWING FILE

SHEET NO. G3

PRELIMINARY NOT FOR CONSTRUCTION

SARATOGA CITY

GATEWAY CONSULTING, Inc.
P.O. BOX 951005 SOUTH JORDAN, UT 84095
PH: (801) 694-5848 FAX: (801) 432-7050
paul@gatewayconsultingllc.com

CIVIL ENGINEERING • CONSULTING • LAND PLANNING
CONSTRUCTION MANAGEMENT

ORIG DATE:	1-1-12
SURVEY BY:	
DRAWN BY :	GPW
DESIGNED BY :	GPW
CHECKED BY :	GPW
SCALE :	1"=40'

NO.	DESCRIPTION	DATE	APP'D

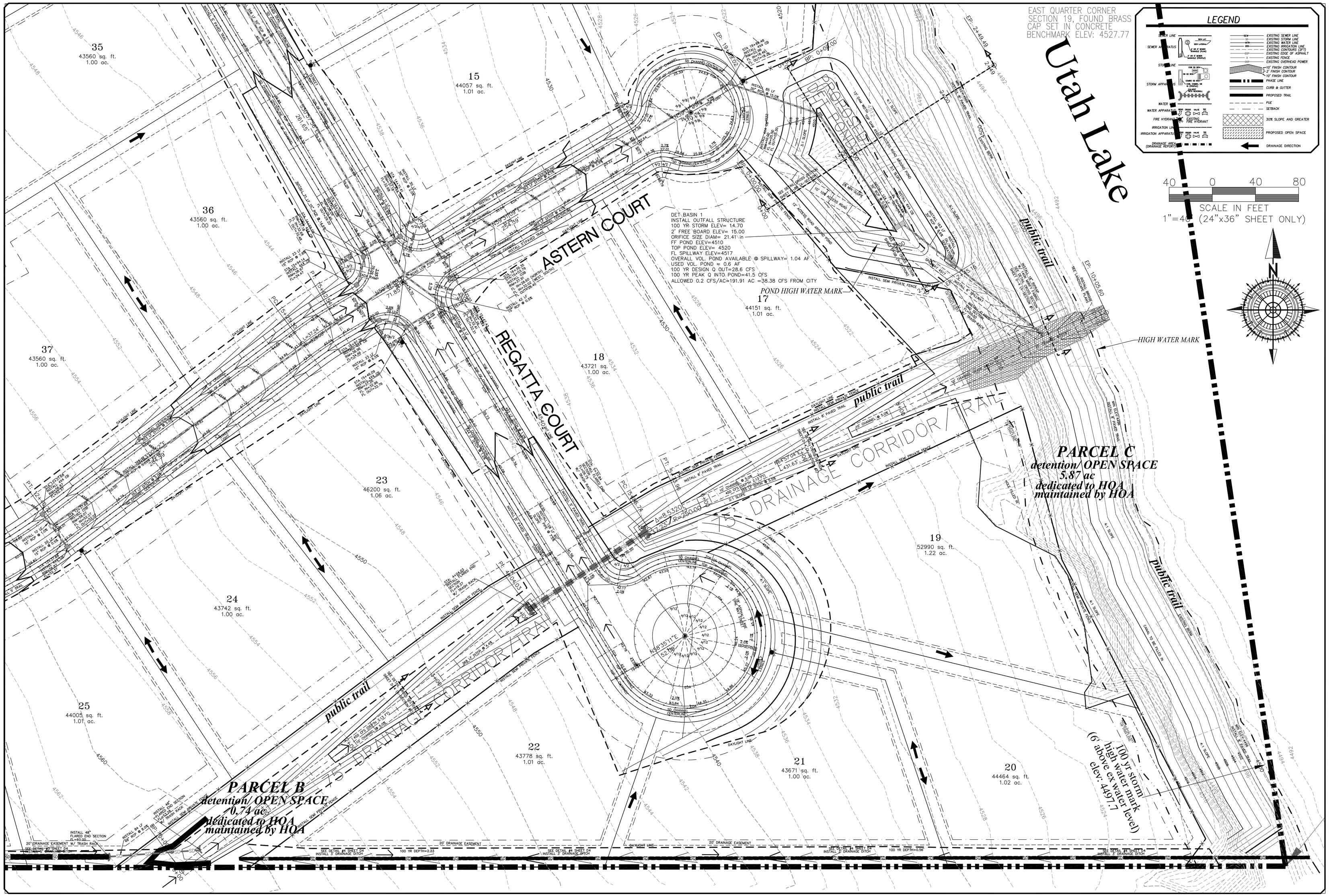

NO.	DESCRIPTION	DATE	APP'D

ORIG DATE: 1-1-12
SURVEY BY:
DRAWN BY: GPW
DESIGNED BY: GPW
CHECKED BY: GPW
SCALE: 1"=40'

GATEWAY CONSULTING, Inc.
P.O. BOX 951005 SOUTH JORDAN, UT 84095
PH: (801) 694-5848 FAX: (801) 432-7050
paul@gatewayconsultingllc.com
CIVIL ENGINEERING • CONSULTING • LAND PLANNING
CONSTRUCTION MANAGEMENT

SAIL HOUSE

40 SCALE GRADING

DRAWING FILE
PROJECT NUMBER
PLOT DATE: 9-20-14

SARATOGA
CITY

PRELIMINARY
NOT FOR
CONSTRUCTION

SHEET NO. G4

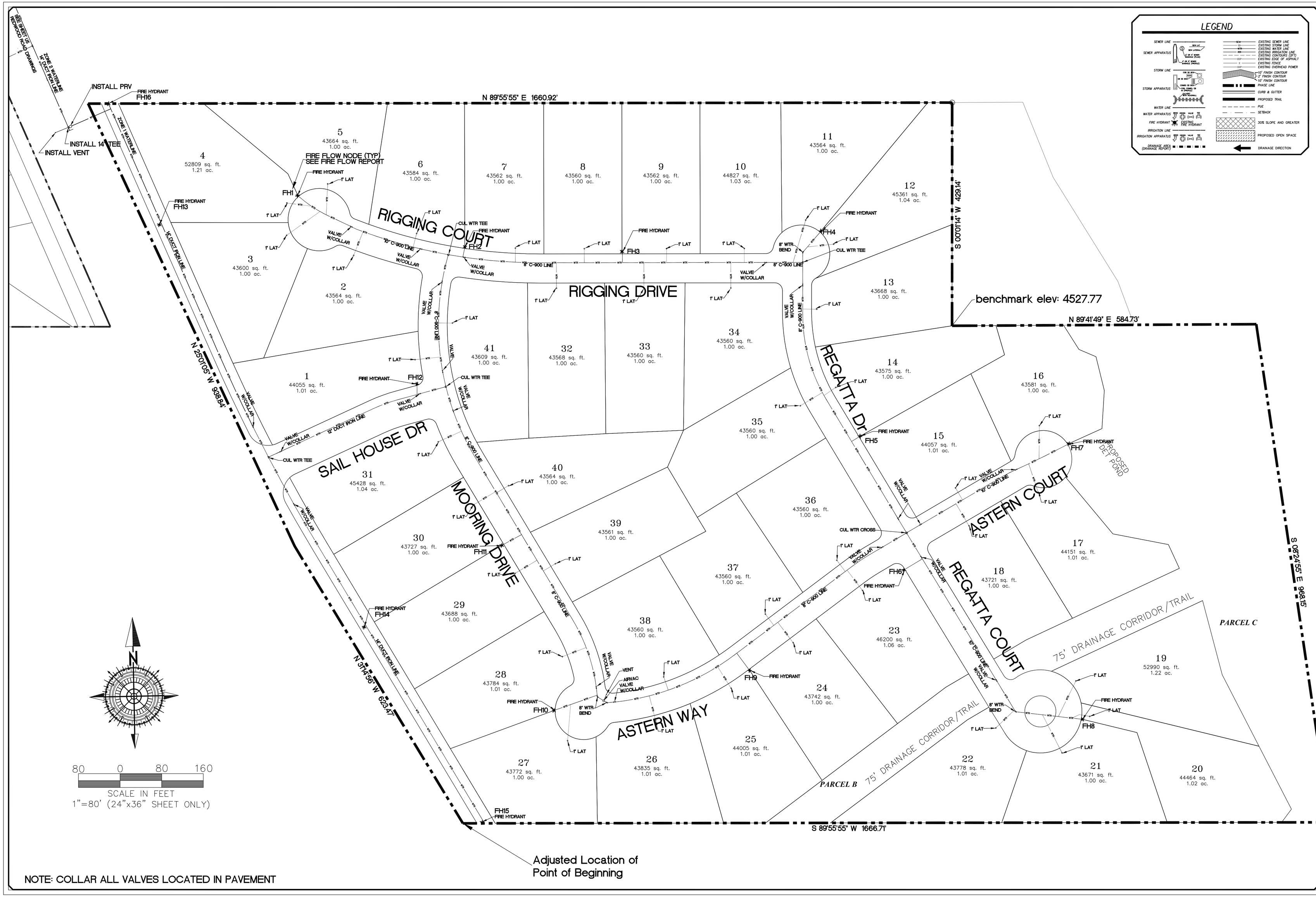

NO.	DESCRIPTION	DATE	APP'D

ORIG. DATE: 05-01-12
SURVEY BY:
DRAWN BY: GPW
DESIGNED BY: GPW
CHECKED BY: GPW
SCALE: 1"=80'

GATEWAY CONSULTING, Inc.
P.O. BOX 951005 SOUTH JORDAN, UT 84095
PH: (801) 694-5848 FAX: (801) 432-7050
paul@gatewayconsultingllc.com
CIVIL ENGINEERING • CONSULTING • LAND PLANNING
CONSTRUCTION MANAGEMENT

SAIL HOUSE

OVERALL CULINARY WATER DISTRIBUTION PLAN

DRAWING FILE: 7.1 culinary wtr plan
PROJECT NUMBER:
PLOT DATE: 9-20-14

SARATOGA CITY

SHEET NO. U1

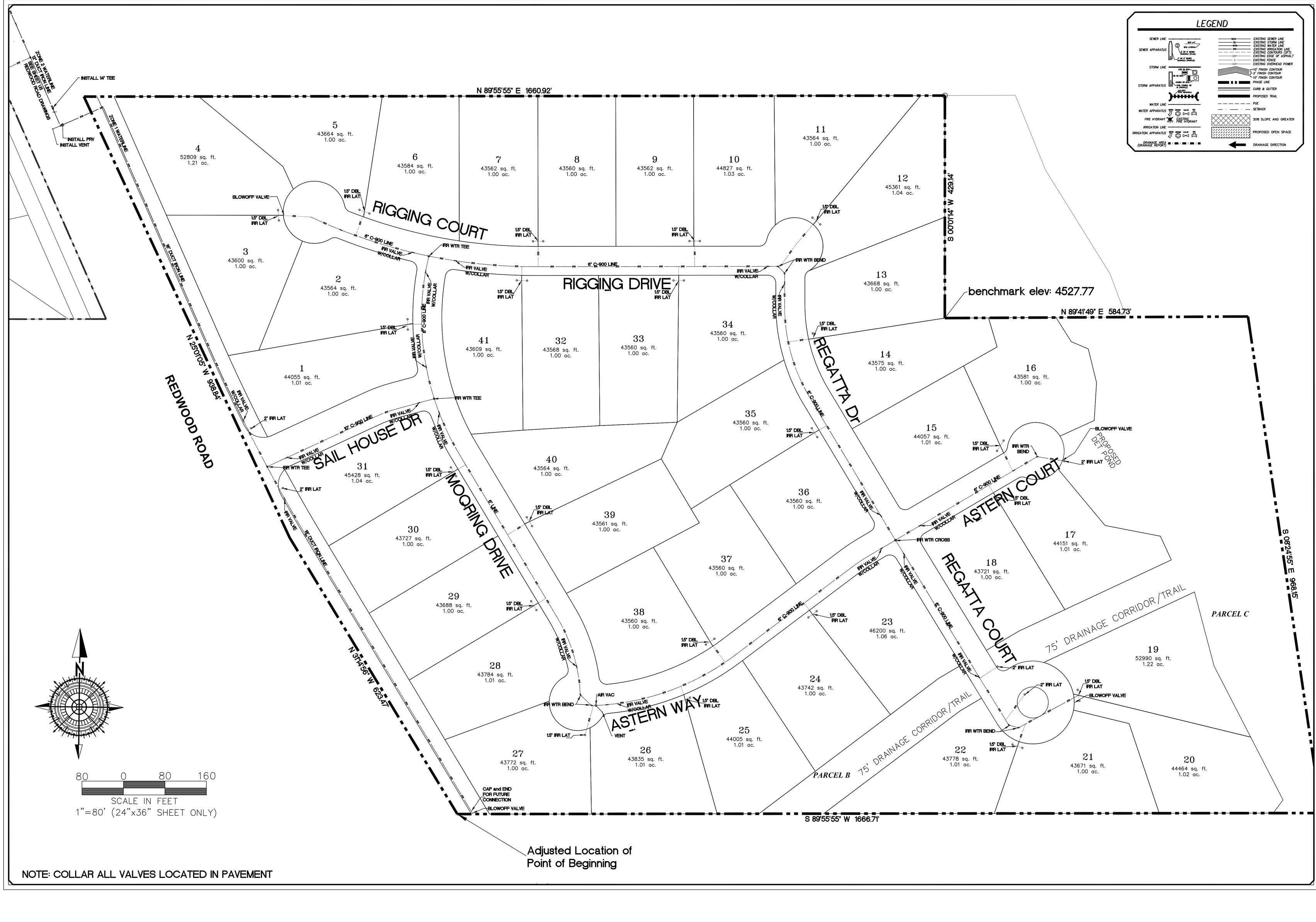

NO.	DESCRIPTION	DATE	APP'D

ORIG. DATE: 05-01-12
SURVEY BY:
DRAWN BY: GPW
DESIGNED BY: GPW
CHECKED BY: GPW
SCALE: 1"=80'

GATEWAY CONSULTING, Inc.
P.O. BOX 951095 SOUTH JORDAN, UT 84095
PH: (801) 694-5848 FAX: (801) 432-7050
paul@gatewayconsultingllc.com
CIVIL ENGINEERING • CONSULTING • LAND PLANNING
CONSTRUCTION MANAGEMENT

SAIL HOUSE

OVERALL IRRIGATION WATER DISTRIBUTION PLAN

7.2 irrigation wtr plan
DRAWING FILE
PROJECT NUMBER
9-20-14
PLOT DATE

SARATOGA CITY

SHEET NO. U2

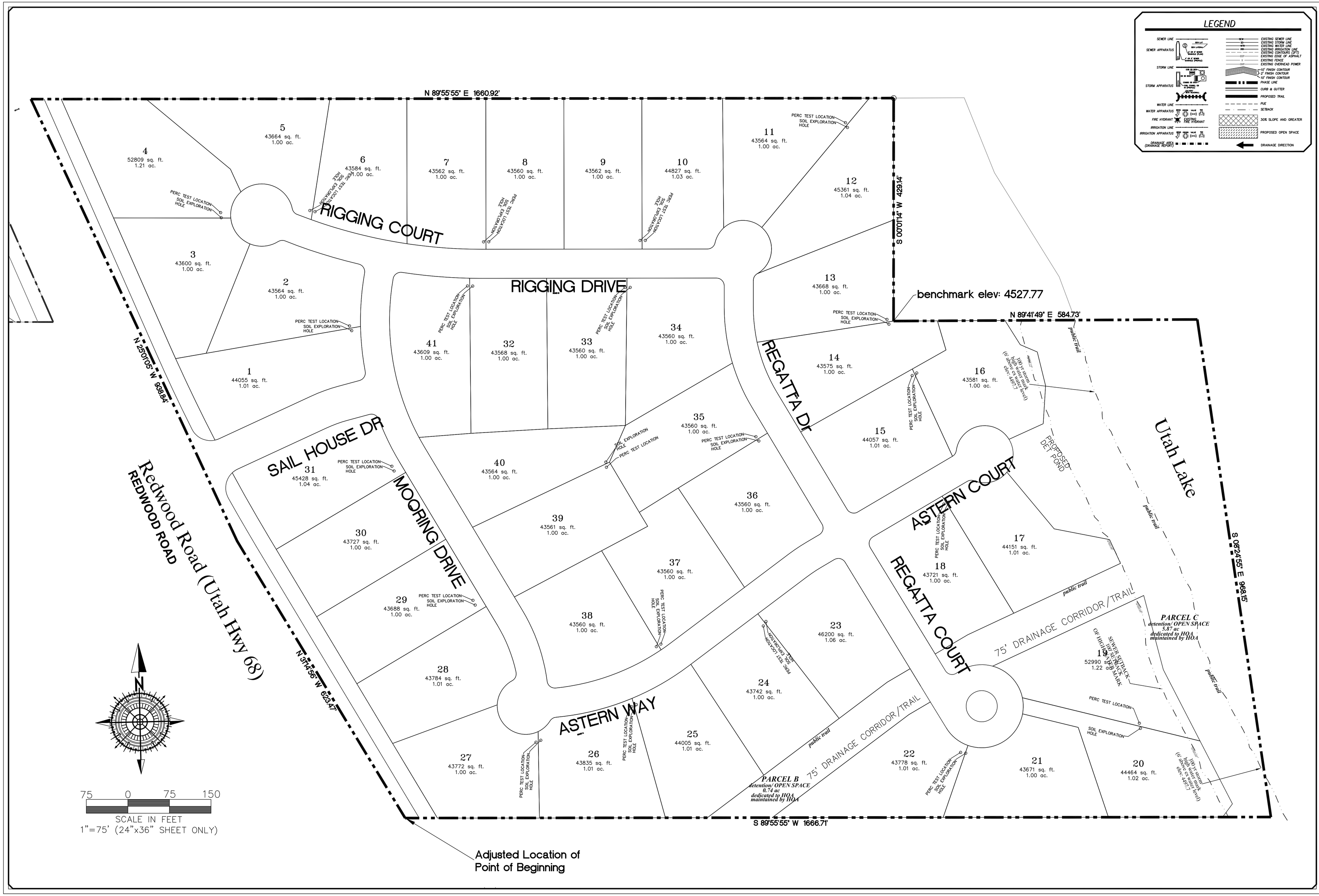

LEGEND

SEWER LINE
SEWER APPARATUS
STORM LINE
STORM APPARATUS
WATER LINE
WATER APPARATUS
FIRE HYDRANT
IRRIGATION LINE
IRRIGATION APPARATUS
DRAINAGE AREA / DRAINAGE REPORT

EXISTING SEWER LINE
EXISTING STORM LINE
EXISTING WATER LINE
EXISTING IRRIGATION LINE
EXISTING CONTOUR (2FT)
EXISTING EDGE OF ASPHALT
EXISTING FENCE
EXISTING OVERHEAD POWER
10' FINISH CONTOUR
2' FINISH CONTOUR
10' FINISH CONTOUR
PHASE LINE
CURB & GUTTER
PROPOSED TRAIL
PUE
SETBACK
30% SLOPE AND GREATER
PROPOSED OPEN SPACE
DRAINAGE DIRECTION

NO.	DESCRIPTION	DATE	APP'D

ORIG. DATE: 05-01-12
SURVEY BY:
DRAWN BY: GPW
DESIGNED BY: GPW
CHECKED BY: GPW
SCALE: 1"=80

GATEWAY CONSULTING, Inc.
P.O. BOX 951005 SOUTH JORDAN, UT 84095
PH: (801) 694-5848 FAX: (801) 432-7050
paul@gatewayconsultingllc.com
CIVIL ENGINEERING - CONSULTING - LAND PLANNING
CONSTRUCTION MANAGEMENT

SAIL HOUSE

OVERALL SEWER PLAN
PERC TEST LOCATIONS

9-20-14 PLOT DATE
PROJECT NUMBER
DRAWING FILE

SARATOGA CITY

SHEET NO. U3

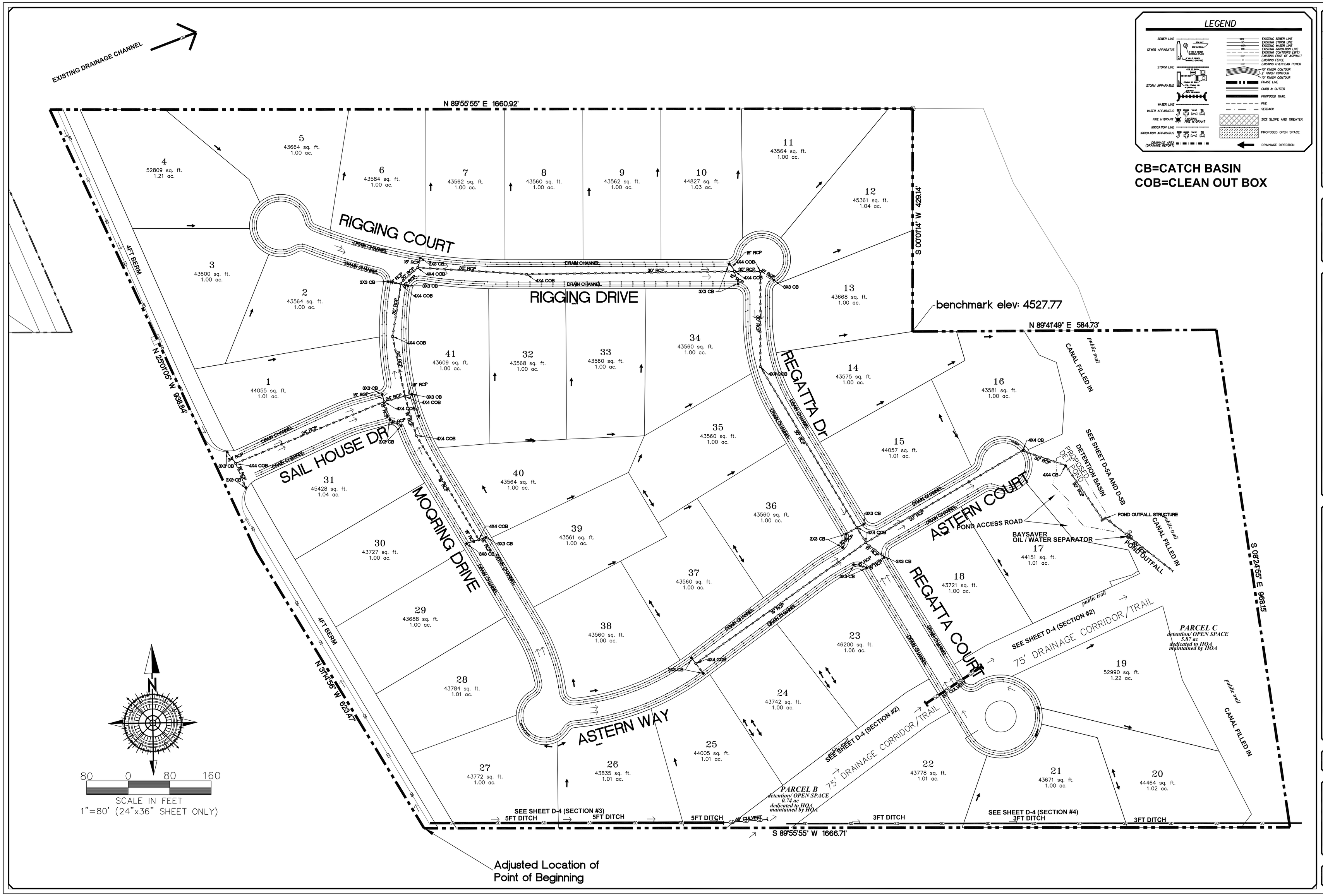

LEGEND

CB=CATCH BASIN
COB=CLEAN OUT BOX

NO.	DESCRIPTION	DATE	APP'D

ORIG. DATE: 05-01-12
SURVEY BY:
DRAWN BY: GPW
DESIGNED BY: GPW
CHECKED BY: GPW
SCALE: 1"=80'

GATEWAY CONSULTING, Inc.
P.O. BOX 951005 SOUTH JORDAN, UT 84095
PH: (801) 694-5848 FAX: (801) 432-7050
paul@gatewayconsultingllc.com
CIVIL ENGINEERING • CONSULTING • LAND PLANNING
CONSTRUCTION MANAGEMENT

SAIL HOUSE

OVERALL STORM SYSTEM DISTRIBUTION PLAN

9-20-14 PLOT DATE
2006.01 PROJECT NUMBER
DRAWING FILE

SARATOGA
CITY

SHEET NO. U4

EXISTING HARBOR PARKWAY
CONNECT TO EX WATERLINES

EXISTING LAKE MOUNTAIN ESTATES

EXISTING HARBOR BAY

FUTURE
LIGHTHOUSE
PROJECT

FUTURE
BEACON POINT PROJECT

1/4 SECTION LINE

SCALE IN FEET
1"=80' (24"x36" SHEET ONLY)
80 0 80 160

CONNECT TO EX WATERLINE
CONNECT TO EX WATERLINE
HARBOR PARKWAY
12" DUCT IRON LINE
12" DUCT IRON LINE
INSTALL ZONE 2 WATERLINE
INSTALL ZONE 2 WATERLINE
8" DUCT IRON LINE
12" DUCT IRON LINE
INSTALL 14" TEE
INSTALL 12" TEE
8" DUCT IRON LINE
12" DUCT IRON LINE
INSTALL ZONE 2 WATERLINE
INSTALL ZONE 2 WATERLINE
INSTALL 14" TEE
INSTALL 12" TEE
INSTALL PRV
CAP AND END WATERLINE
INSTALL PRV
8" DUCT IRON LINE
INST. FH
INST 14" TEE
ZONE 1 WATERLINE

FUTURE LIGHT HOUSE PROJECT

SAIL HOUSE BOUNDARY

LEGEND

SEWER LINE
SEWER APPARATUS
STORM LINE
STORM APPARATUS
WATER LINE
WATER APPARATUS
FIRE HYDRANT
IRRIGATION LINE
IRRIGATION APPARATUS
DRAINAGE AREA (DRAINAGE REPORT)
EXISTING SEWER LINE
EXISTING SEWER MH
EXISTING WATER LINE
EXISTING CONTOURS (2FT)
EXISTING EDGE OF ASPHALT
EXISTING OVERHEAD POWER
10' FINISH CONTOUR
2' FINISH CONTOUR
PHASE LINE
CURB & GUTTER
PROPOSED TRAIL
PUE
SETBACK
30% SLOPE AND GREATER
PROPOSED OPEN SPACE
DRAINAGE DIRECTION

SHEET NO. U5

SARATOGA CITY

SAIL HOUSE

OFFSITE WATER AND IRRIGATION DISTRIBUTION PLAN

9-20-14		7.1 culinary wtr plan
PLOT DATE	PROJECT NUMBER	DRAWING FILE

GATEWAY CONSULTING, Inc.
P.O. BOX 951005 SOUTH JORDAN, UT 84095
PH: (801) 694-5848 FAX: (801) 432-7050
paul@gatewayconsultingllc.com

CIVIL ENGINEERING • CONSULTING • LAND PLANNING
CONSTRUCTION MANAGEMENT

ORIG. DATE:	05-01-12
SURVEY BY:	
DRAWN BY :	GPW
DESIGNED BY :	GPW
CHECKED BY :	GPW
SCALE :	1"=80'

NO.	DESCRIPTION	DATE	APP'D

P9-P11 OFFSITE WATER

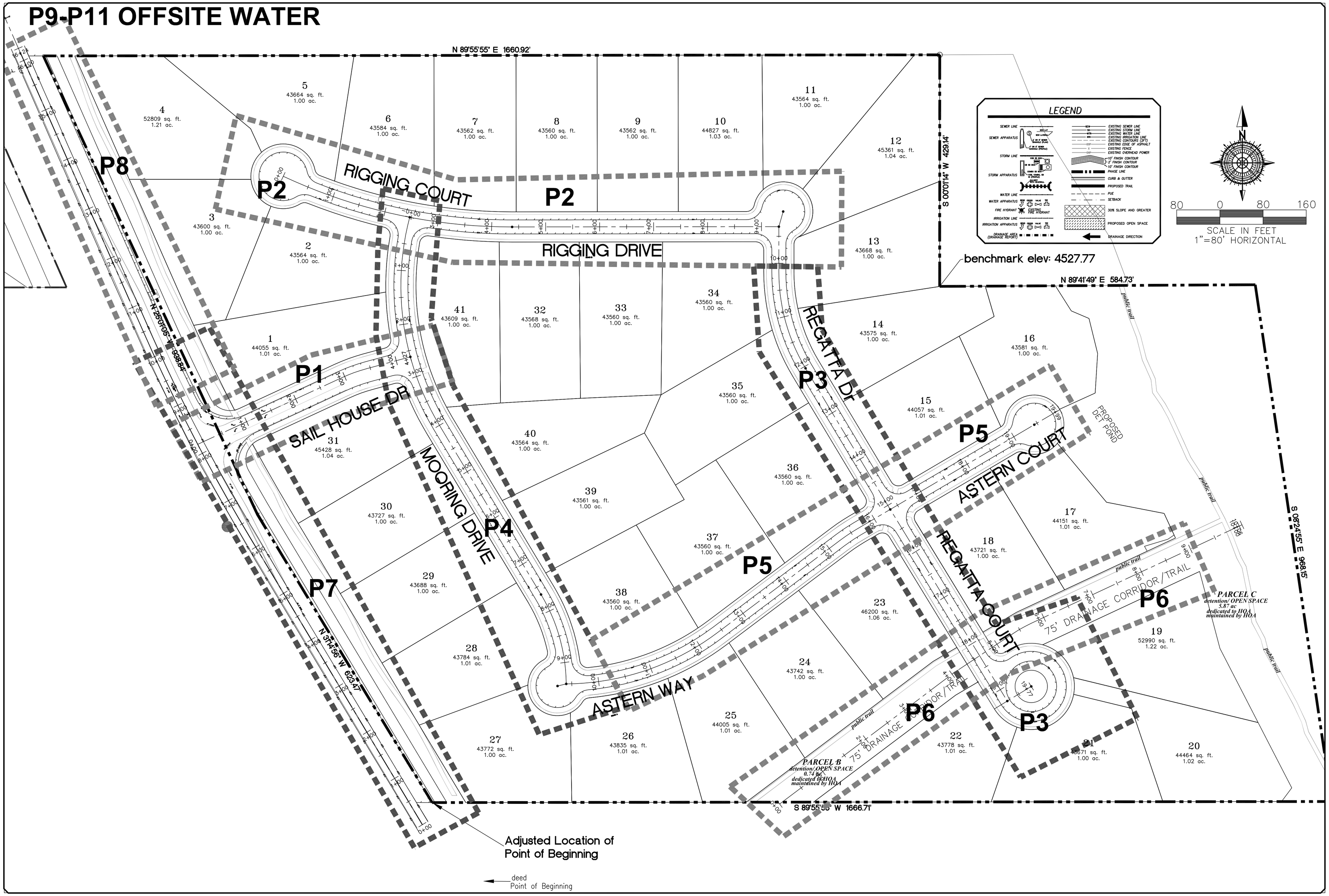

NO.	DESCRIPTION	DATE	APP'D

ORIG. DATE: 1-11-12
SURVEY BY:
DRAWN BY: GRW
DESIGNED BY: GRW
CHECKED BY: GRW
SCALE: 1"=80'

GATEWAY CONSULTING, inc.
P.O. BOX 951005 SOUTH JORDAN, UT 84095
PH: (801) 694-5848 FAX: (801)432-7050
paul@gatewayconsultingllc.com
CIVIL ENGINEERING • CONSULTING • LAND PLANNING
CONSTRUCTION MANAGEMENT

SAIL HOUSE

PLAN AND PROFILE
SHEET INDEX

DRAWING FILE
PROJECT NUMBER
PLOT DATE 9-20-14

SARATOGA
CITY

PRELIMINARY
NOT FOR
CONSTRUCTION

SHEET NO. PP

NO.	DESCRIPTION	DATE	APP'D

ORIG. DATE: 1-1-2

SCALE : 1"=40'

CHECKED BY : GPW

DESIGNED BY : GPW

DRAWN BY : GPW

SURVEY BY:

GATEWAY CONSULTING, inc.

P.O. BOX 951005 SOUTH JORDAN, UT 84095
PH: (801) 694-5848 FAX: (801) 432-7050
paul@gatewayconsultingllc.com

CIVIL ENGINEERING • CONSULTING • LAND PLANNING
CONSTRUCTION MANAGEMENT

DRAWING FILE

PROJECT NUMBER

PLOT DATE 9-20-14

SAIL HOUSE

ROAD C STA; 0+00 TO 5+00

SARATOGA CITY

PRELIMINARY NOT FOR CONSTRUCTION

SHEET NO. P1

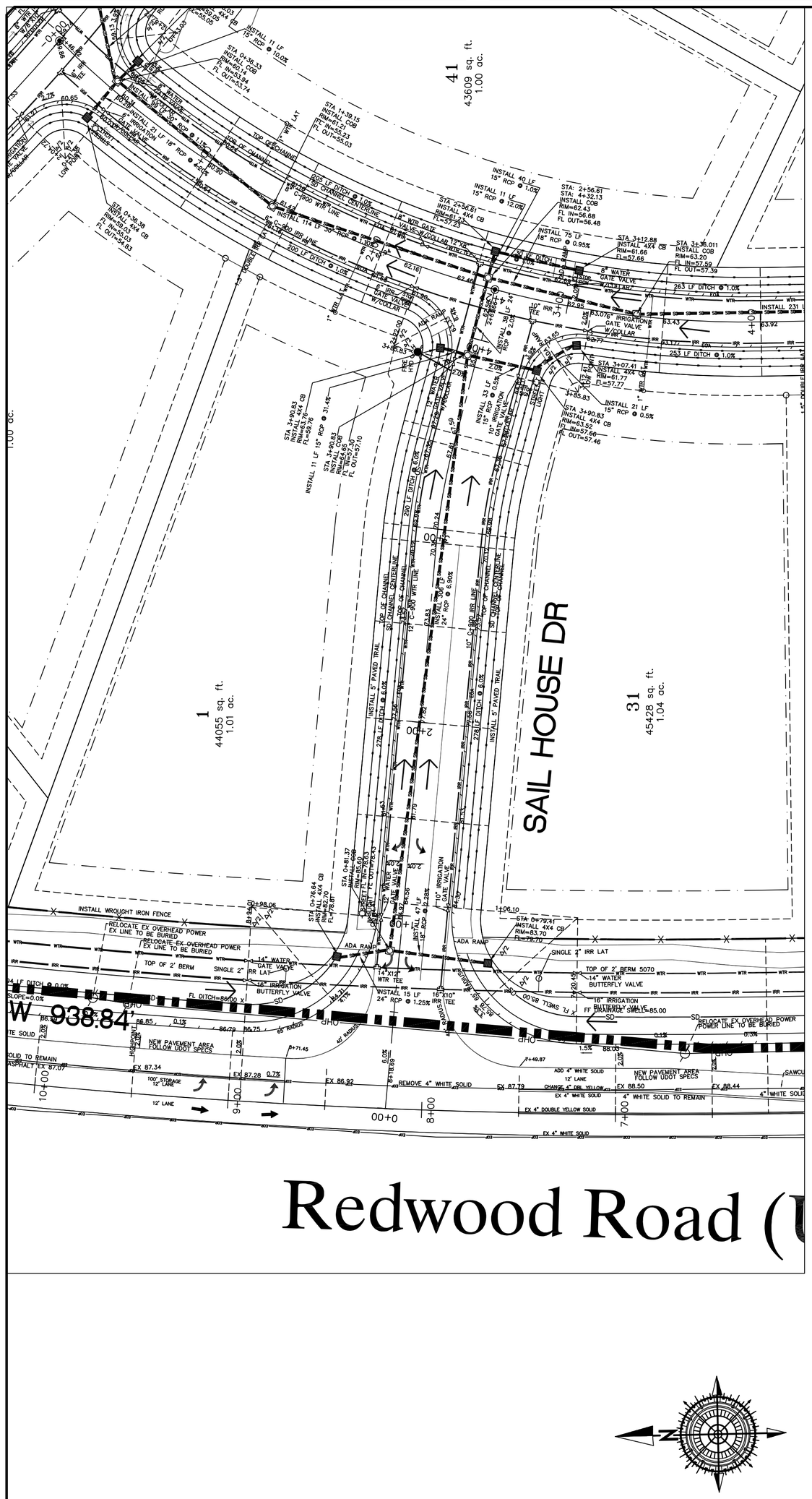

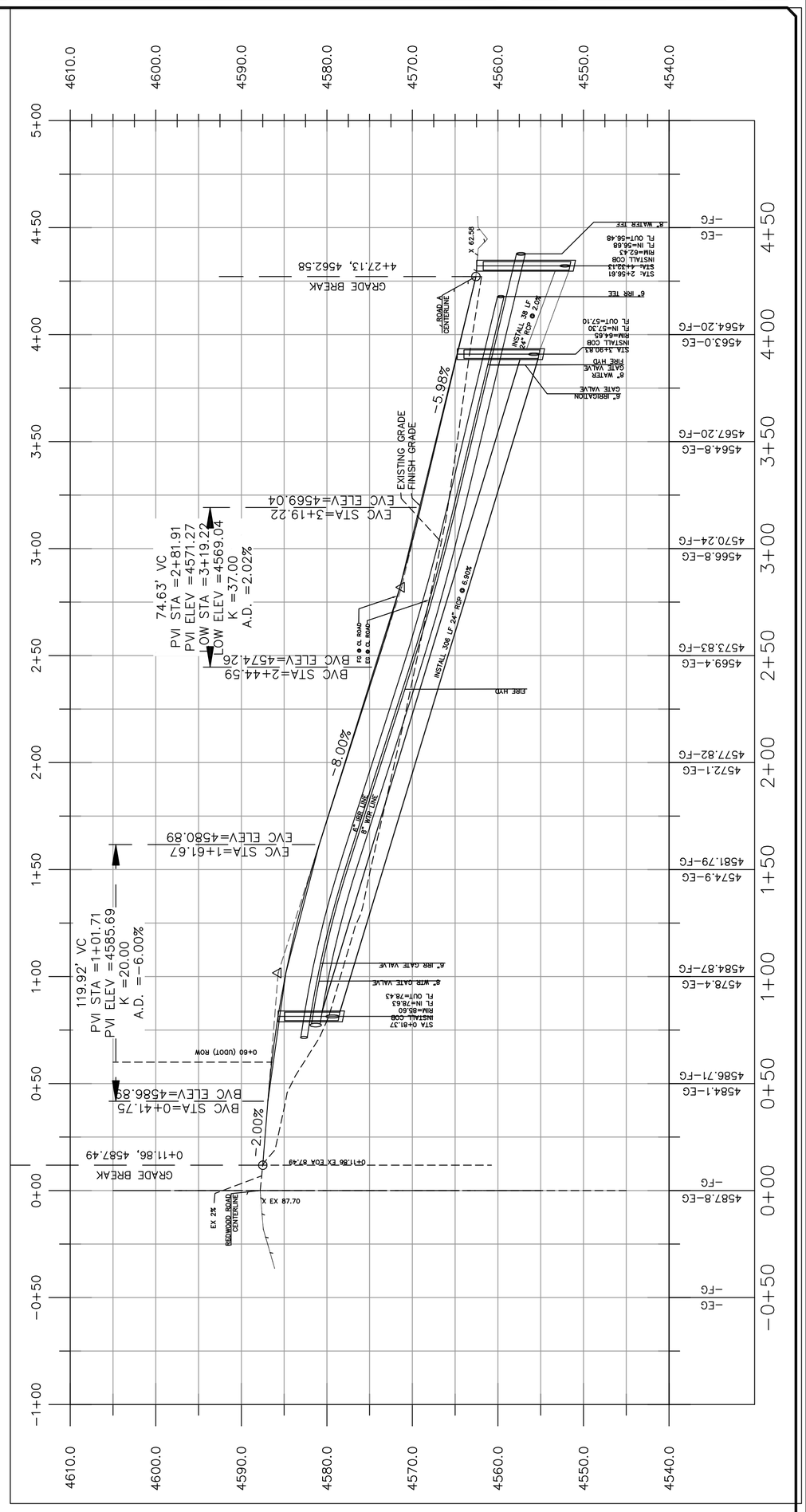

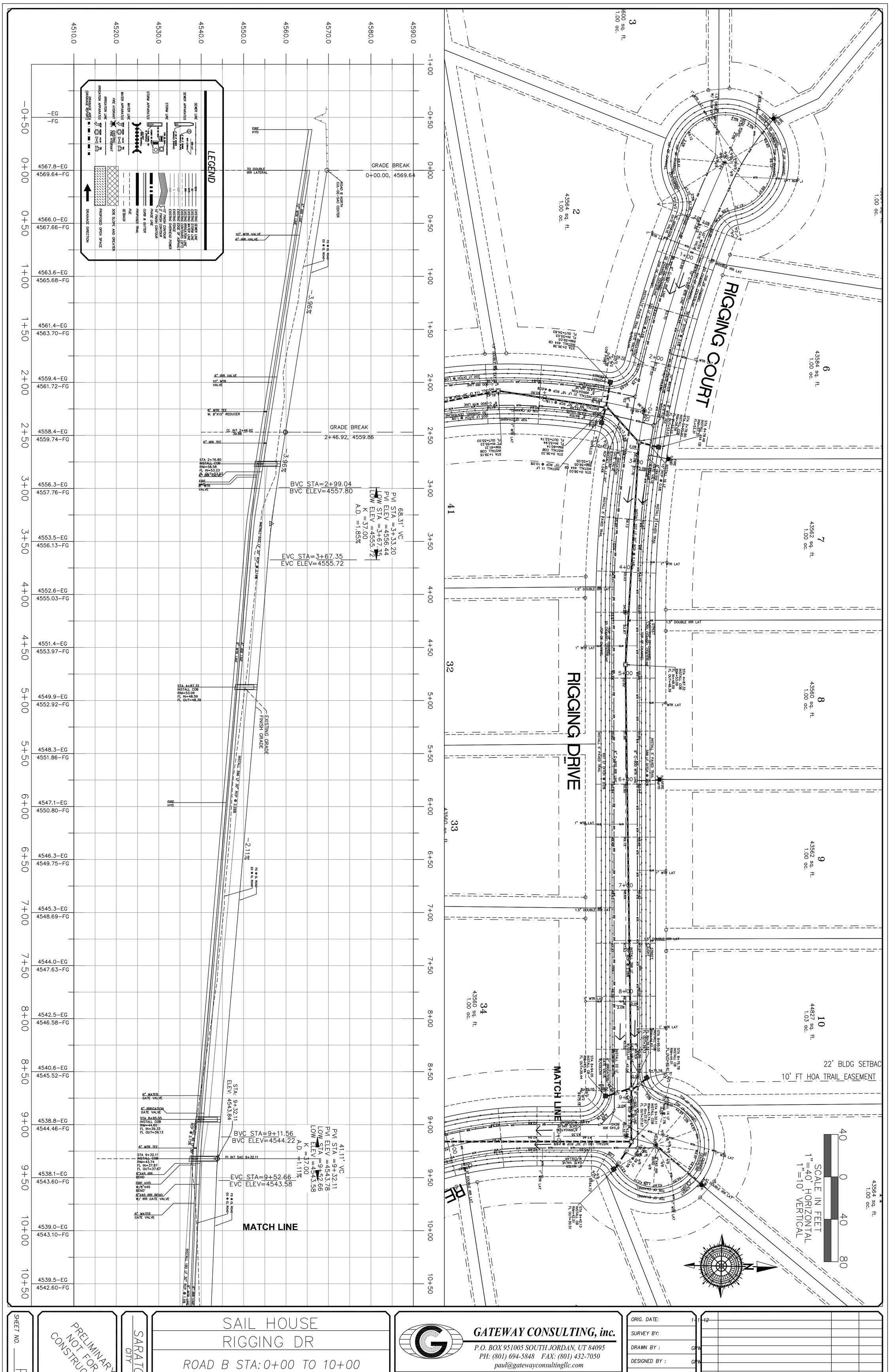

SHEET NO. P2

PRELIMINARY NOT FOR CONSTRUCTION

SARATOGA CITY

SAIL HOUSE
RIGGING DR

ROAD B STA: 0+00 TO 10+00

9-20-14		
PLOT DATE	PROJECT NUMBER	DRAWING FILE

GATEWAY CONSULTING, inc.
P.O. BOX 951005 SOUTH JORDAN, UT 84095
PH: (801) 694-5848 FAX: (801) 432-7050
paul@gatewayconsultingllc.com

CIVIL ENGINEERING • CONSULTING • LAND PLANNING
CONSTRUCTION MANAGEMENT

ORIG. DATE:	1-11-12
SURVEY BY:	
DRAWN BY :	GMW
DESIGNED BY :	GMW
CHECKED BY :	GMW
SCALE :	1"=40'

NO.	DESCRIPTION	DATE	APP'D

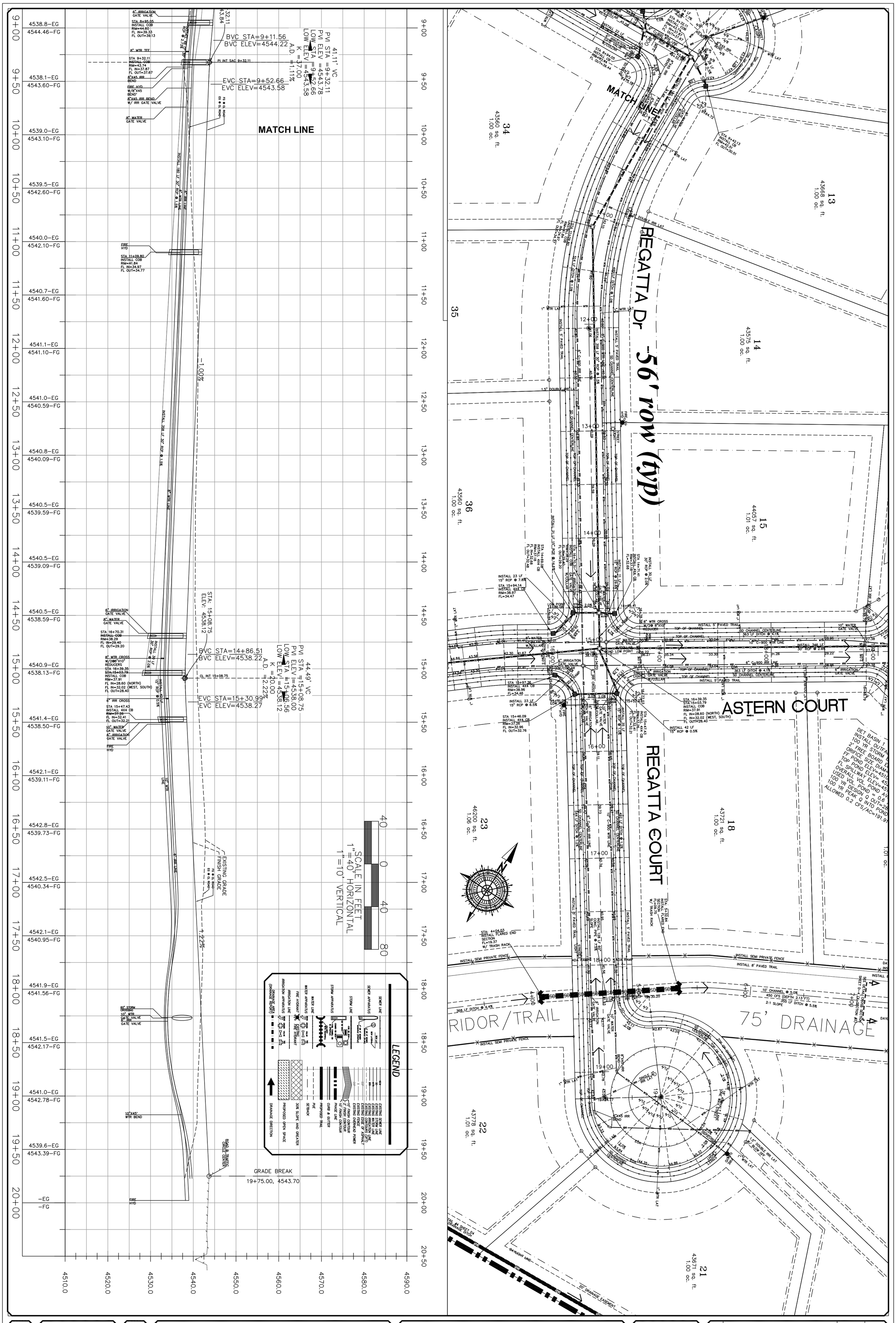

SHEET NO. P3

PRELIMINARY NOT FOR CONSTRUCTION

SARATOGA CITY

SAIL HOUSE

REGATTA DRIVE/COURT

ROAD B 10+00 TO 20+00

9-20-14		
PLOT DATE	PROJECT NUMBER	DRAWING FILE

GATEWAY CONSULTING, inc.
P.O. BOX 951005 SOUTH JORDAN, UT 84095
PH: (801) 694-5848 FAX: (801) 432-7050
paul@gatewayconsultingllc.com

CIVIL ENGINEERING • CONSULTING • LAND PLANNING
CONSTRUCTION MANAGEMENT

ORIG. DATE:	1-1-12
SURVEY BY:	
DRAWN BY :	GPW
DESIGNED BY :	GPW
CHECKED BY :	GPW
SCALE :	1"=40'

NO.	DESCRIPTION	DATE	APP'D

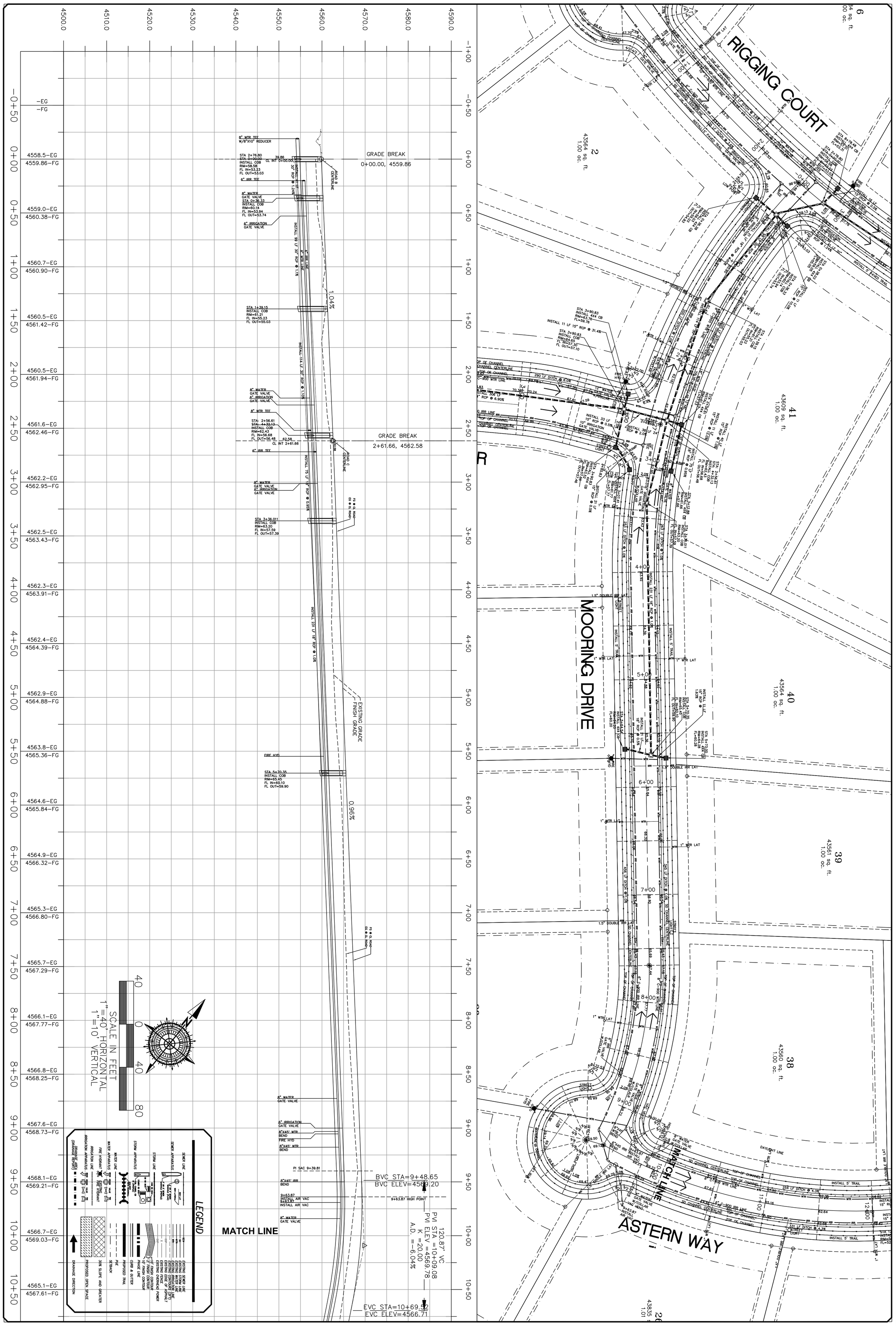

SHEET NO. P4

PRELIMINARY NOT FOR CONSTRUCTION

SARATOGA CITY

SAIL HOUSE

MOORING DRIVE

ROAD A STA: 0+00 TO 10+00

9-20-14		
PLOT DATE	PROJECT NUMBER	DRAWING FILE

GATEWAY CONSULTING, inc.
P.O. BOX 951005 SOUTH JORDAN, UT 84095
PH: (801) 694-5848 FAX: (801) 432-7050
paul@gatewayconsultingllc.com
CIVIL ENGINEERING • CONSULTING • LAND PLANNING
CONSTRUCTION MANAGEMENT

ORIG. DATE:	03-01-06
SURVEY BY:	
DRAWN BY :	GPW
DESIGNED BY :	GPW
CHECKED BY :	GPW
SCALE :	1"=40'

NO.	DESCRIPTION	DATE	APP'D

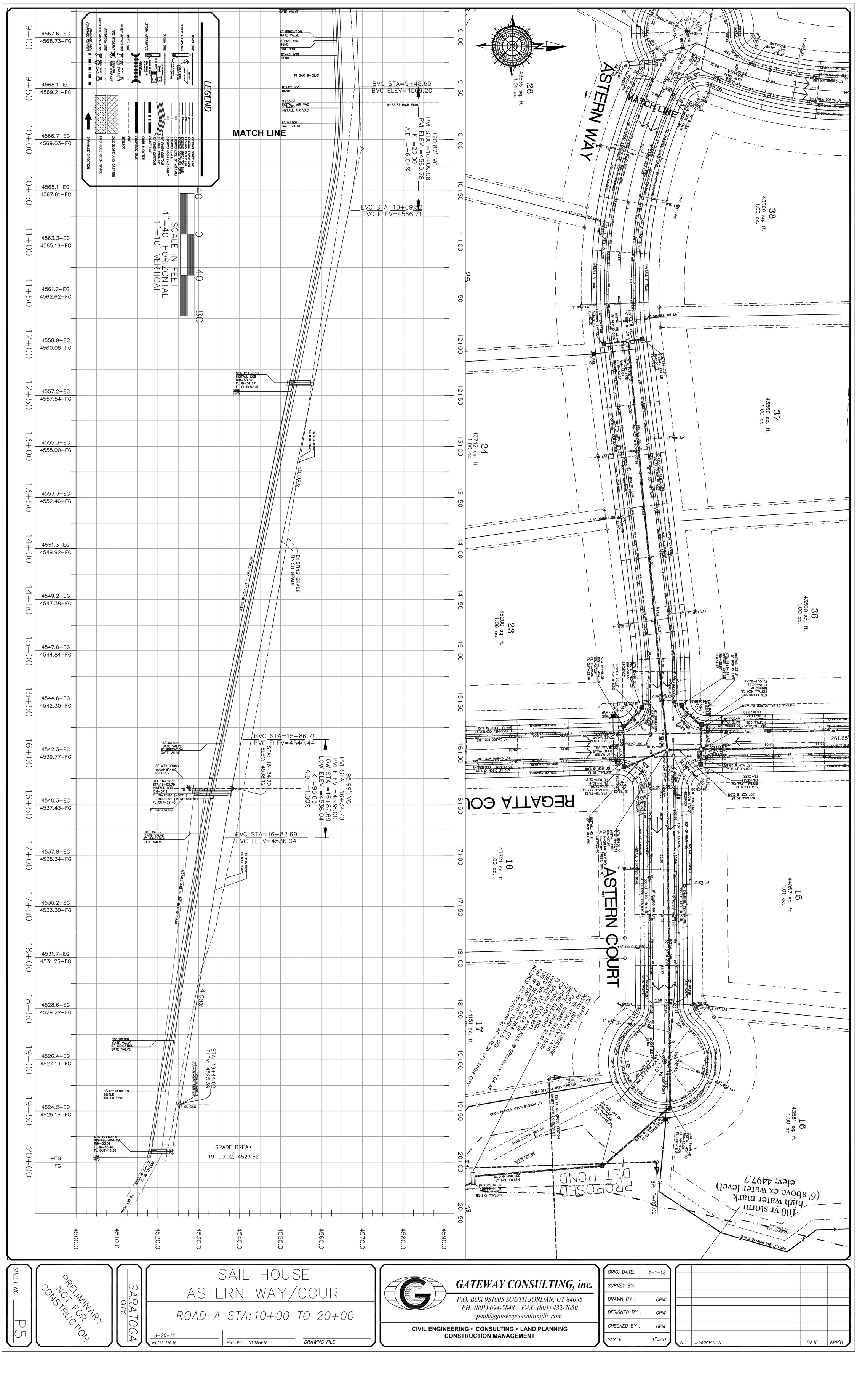
LEGEND
SCALE IN FEET
1"=40' HORIZONTAL
1"=10' VERTICAL
MATCH LINE
MATCH LINE
ASTERN WAY
ASTERN COURT
REGATTA COURT
PROPOSED DET POND
BVC STA=9+48.65
BVC ELEV=4569.20
PVI STA =10+09.08
PVI ELEV =4569.78
K =20.00
A.D. =-6.04%
EVC STA=10+69.52
EVC ELEV=4566.71
BVC STA=15+86.71
BVC ELEV=4540.44
EVC STA=16+82.69
EVC ELEV=4536.04
95.99' VC
PVI STA =16+34.70
PVI ELEV =4538.00
LOW STA =16+82.69
LOW ELEV =4536.04
K =95.63
A.D. =1.00%
GRADE BREAK
19+90.02, 4523.52
EXISTING GRADE
FINISH GRADE
-5.08%
-4.08%
INSTALL 397 LF 15" RCP @ 5.09%
INSTALL 346 LF 30" RCP @ 2.89%
STA 12+37.68
INSTALL COB
RIM=58.07
FL IN=52.27
FL OUT=52.07
FIRE HYD
STA: 16+34.70
ELEV: 4538.12
STA: 19+44.02
ELEV: 4525.39
STA 16+39.35
STA:15+03.79
INSTALL COB
RIM=37.91
FL IN=28.60 (NORTH)
FL IN=32.02 (WEST, SOUTH)
FL OUT=28.40
38.12
CL INT 16+34.70
STA: 19+89.48
INSTALL 4X4 CB
RIM=22.96
FL IN=18.46
FL OUT=18.26
FIRE HYD
INSTALL 85 LF 30" RCP @ 1.50%
TO DET POND
GRADE BREAK
19+90.02, 4523.52
4567.6–EG
4568.73–FG
4568.1–EG
4569.21–FG
4566.7–EG
4569.03–FG
4565.1–EG
4567.61–FG
4563.3–EG
4565.16–FG
4561.2–EG
4562.62–FG
4558.9–EG
4560.08–FG
4557.2–EG
4557.54–FG
4555.3–EG
4555.00–FG
4553.3–EG
4552.46–FG
4551.3–EG
4549.92–FG
4549.2–EG
4547.38–FG
4547.0–EG
4544.84–FG
4544.6–EG
4542.30–FG
4542.3–EG
4539.77–FG
4540.3–EG
4537.43–FG
4537.8–EG
4535.34–FG
4535.2–EG
4533.30–FG
4531.7–EG
4531.26–FG
4528.6–EG
4529.22–FG
4526.4–EG
4527.19–FG
4524.2–EG
4525.15–FG
–EG
–FG
9+00
9+50
10+00
10+50
11+00
11+50
12+00
12+50
13+00
13+50
14+00
14+50
15+00
15+50
16+00
16+50
17+00
17+50
18+00
18+50
19+00
19+50
20+00
4500.0
4510.0
4520.0
4530.0
4540.0
4550.0
4560.0
4570.0
4580.0
4590.0
26
43835 sq. ft.
1.01 ac.
38
43560 sq. ft.
1.00 ac.
37
43560 sq. ft.
1.00 ac.
24
43742 sq. ft.
1.00 ac.
23
46200 sq. ft.
1.06 ac.
36
43560 sq. ft.
1.00 ac.
18
43721 sq. ft.
1.00 ac.
15
44057 sq. ft.
1.01 ac.
17
44151 sq. ft.
16
43581 sq. ft.
1.00 ac.
400 yr storm
high water mark
(6' above ex water level)
elev: 4497.7
BP: 0+00.00
BP: 0+00.00
261.65'
SHEET NO. P5
PRELIMINARY
NOT FOR
CONSTRUCTION
SARATOGA CITY
SAIL HOUSE
ASTERN WAY/COURT
ROAD A STA: 10+00 TO 20+00
9-20-14
PLOT DATE
PROJECT NUMBER
DRAWING FILE
GATEWAY CONSULTING, inc.
P.O. BOX 951005 SOUTH JORDAN, UT 84095
PH: (801) 694-5848 FAX: (801) 432-7050
paul@gatewayconsultingllc.com
CIVIL ENGINEERING • CONSULTING • LAND PLANNING
CONSTRUCTION MANAGEMENT
ORIG. DATE: 1-1-12
SURVEY BY:
DRAWN BY : GPW
DESIGNED BY : GPW
CHECKED BY : GPW
SCALE : 1"=40'
NO. DESCRIPTION DATE APP'D

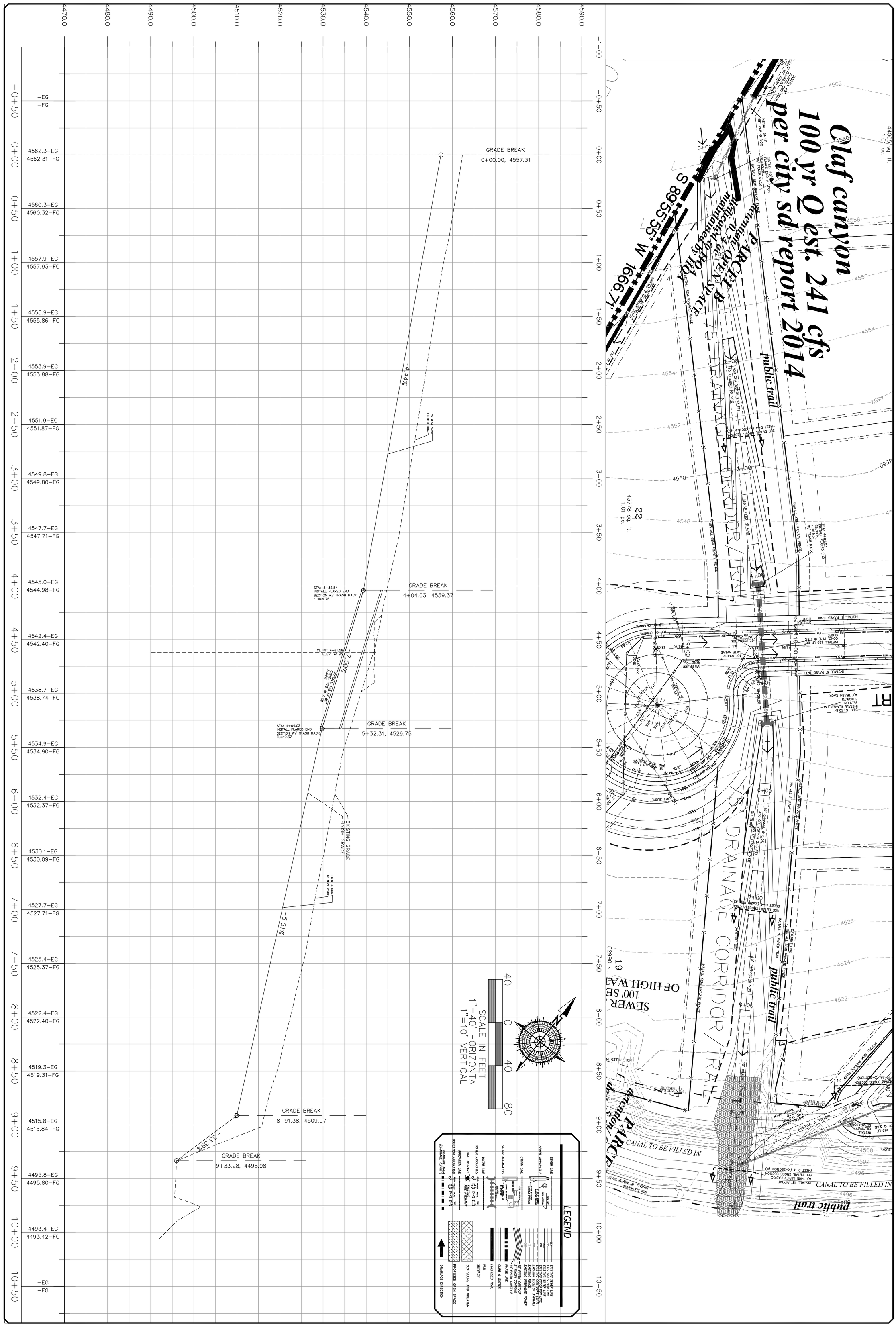
Olaf canyon
100 yr Q est. 241 cfs
per city sd report 2014
PARCEL B
OPEN SPACE
75' DRAINAGE CORRIDOR/TRAIL
public trail
S 89°55'55" W 1666.7'
GRADE BREAK
0+00.00, 4557.31
-4.44%
GRADE BREAK
4+04.03, 4539.37
STA: 5+32.84
INSTALL FLARED END
SECTION w/ TRASH RACK
FL=09.75
CL INT 4+61.58
ELEV: 41.93
7.50%
STA: 4+04.03
INSTALL FLARED END
SECTION W/ TRASH RACK
FL=19.37
GRADE BREAK
5+32.31, 4529.75
-5.51%
EXISTING GRADE
FINISH GRADE
GRADE BREAK
8+91.38, 4509.97
-33.39%
GRADE BREAK
9+33.28, 4495.98
SCALE IN FEET
1"=40' HORIZONTAL
1"=10' VERTICAL
LEGEND
DRAINAGE DIRECTION
PROPOSED OPEN SPACE
30% SLOPE AND GREATER
SETBACK
PIVE
PROPOSED TRAIL
CURB & GUTTER
PHASE LINE
10' FINISH CONTOUR
1' FINISH CONTOUR
EXISTING OVERHEAD POWER
EXISTING EDGE OF ASPHALT
EXISTING CONTOURS (2FT)
EXISTING WATER LINE
EXISTING STORM LINE
EXISTING SEWER LINE
SEWER APPARATUS
STORM APPARATUS
WATER LINE
WATER APPARATUS
FIRE HYDRANT
EXISTING FIRE HYDRANT
IRRIGATION LINE
IRRIGATION APPARATUS
(DRAINAGE ARROW)
SEWER LINE
STORM LINE
CANAL TO BE FILLED IN
public trail
SAIL HOUSE
OLOF CHANNEL
75FT DRAINAGE CORRIDOR
SHEET NO. P6
PRELIMINARY
NOT FOR
CONSTRUCTION
SARATOGA CITY
9-20-14
PLOT DATE
PROJECT NUMBER
DRAWING FILE
GATEWAY CONSULTING, inc.
P.O. BOX 951005 SOUTH JORDAN, UT 84095
PH: (801) 694-5848 FAX: (801) 432-7050
paul@gatewayconsultingllc.com
CIVIL ENGINEERING • CONSULTING • LAND PLANNING
CONSTRUCTION MANAGEMENT
ORIG. DATE: 1-1-12
SURVEY BY:
DRAWN BY : GPW
DESIGNED BY : GPW
CHECKED BY : GPW
SCALE : 1"=40'
NO. DESCRIPTION DATE APP'D

SHEET NO.				
P7	PRELIMINARY NOT FOR CONSTRUCTION	SARATOGA CITY	SAIL HOUSE REDWOOD ROAD REDWOOD 0+00 TO 10+50	

9-20-14		
PLOT DATE	PROJECT NUMBER	DRAWING FILE

GATEWAY CONSULTING, inc.
P.O. BOX 951005 SOUTH JORDAN, UT 84095
PH: (801) 694-5848 FAX: (801) 432-7050
paul@gatewayconsultingllc.com
CIVIL ENGINEERING • CONSULTING • LAND PLANNING
CONSTRUCTION MANAGEMENT

ORIG. DATE:	1-1-12
SURVEY BY:	
DRAWN BY :	GPW
DESIGNED BY :	GPW
CHECKED BY :	GPW
SCALE :	1"=40'

NO.	DESCRIPTION	DATE	APP'D

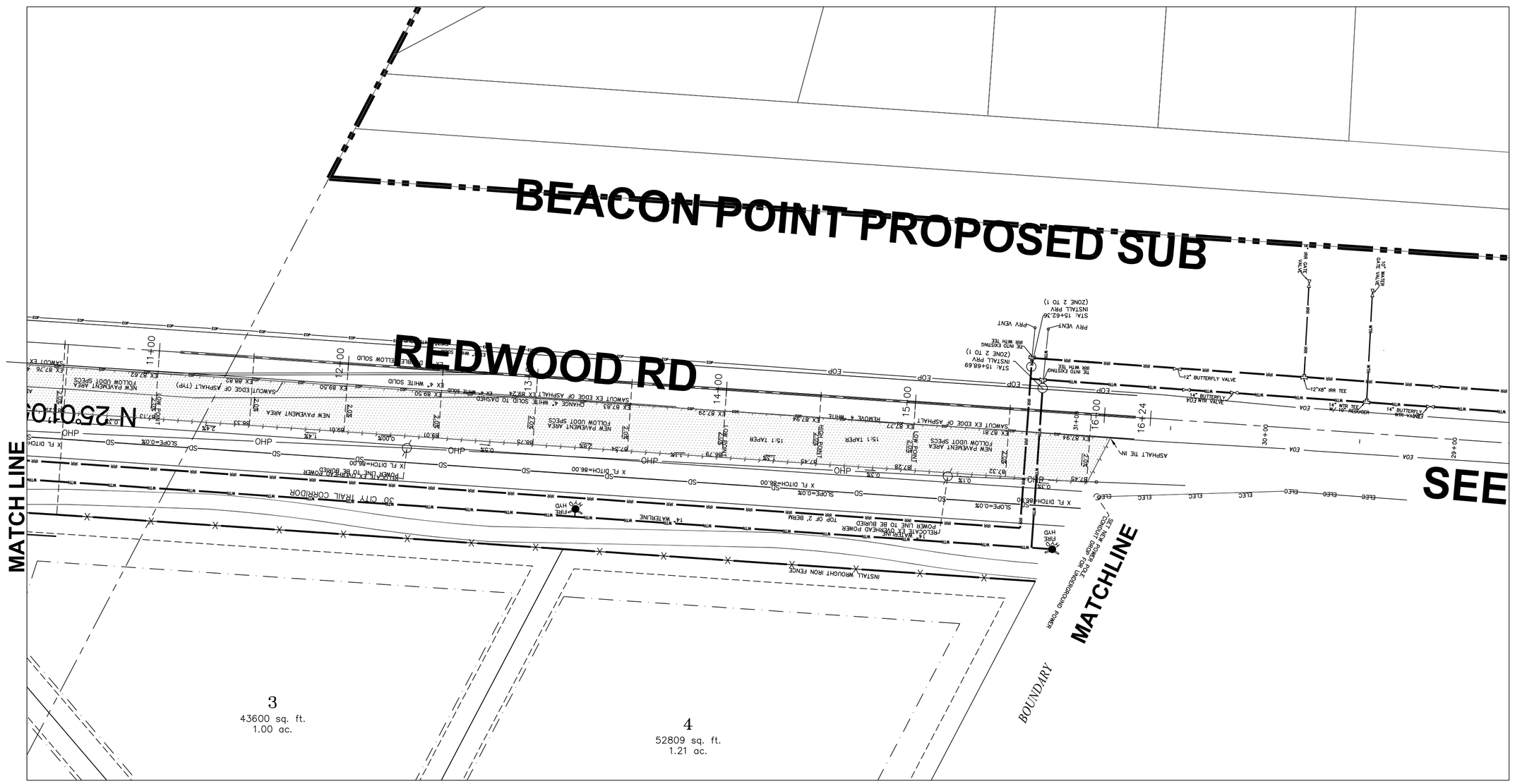

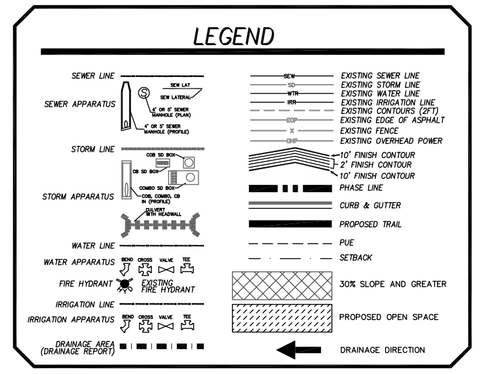

ASPHALT PER UDOT SPECS

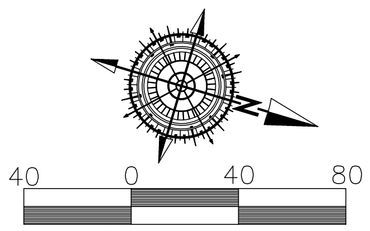

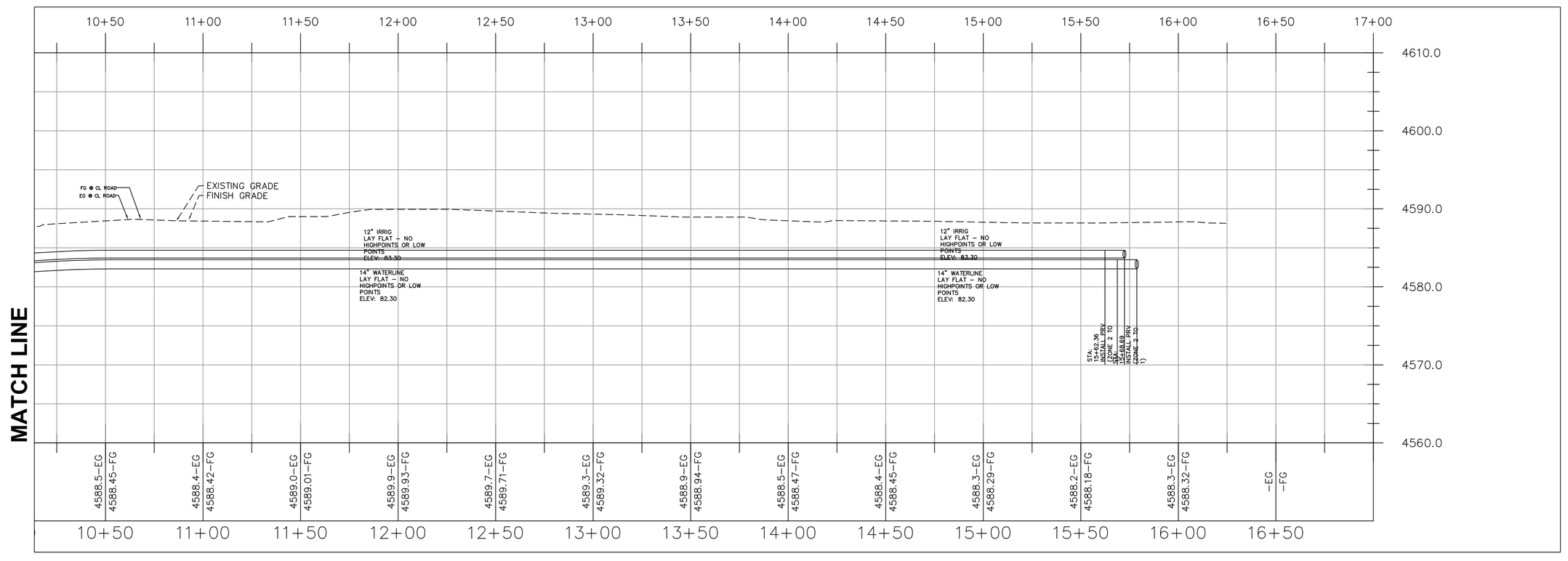

NO.	DESCRIPTION	DATE	APP'D

1"=40'

ORIG. DATE:
SURVEY BY:
DRAWN BY : GPM
DESIGNED BY : GPM
CHECKED BY : GPM
SCALE : 1"=40'

GATEWAY CONSULTING, inc.
P.O. BOX 951005 SOUTH JORDAN, UT 84095
PH: (801) 694-5846 FAX: (801) 432-7050
paul@gatewayconsultingllc.com
CIVIL ENGINEERING • CONSULTING • LAND PLANNING
CONSTRUCTION MANAGEMENT

SAIL HOUSE
REDWOOD ROAD
REDWOOD 10+50 TO END

DRAWING FILE
PROJECT NUMBER
9-20-14
PLOT DATE

SARATOGA CITY

PRELIMINARY
NOT FOR
CONSTRUCTION

SHEET NO. P8

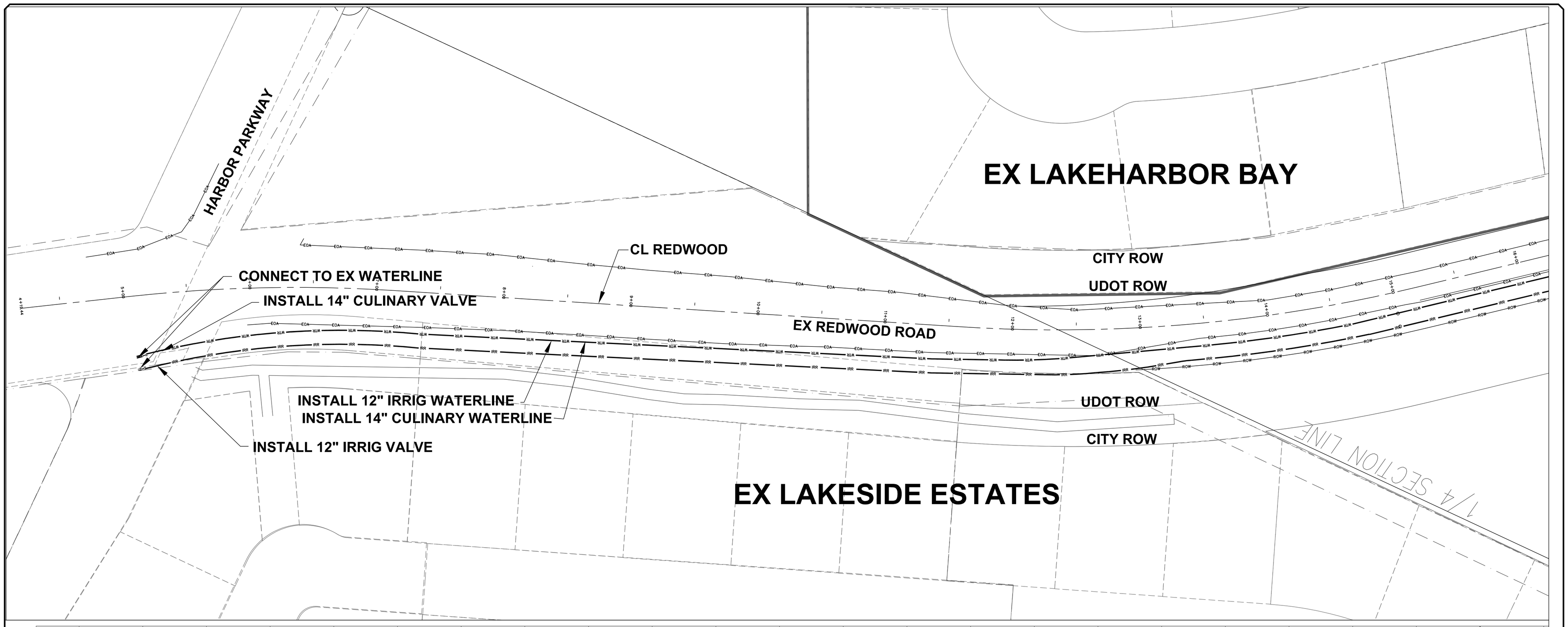

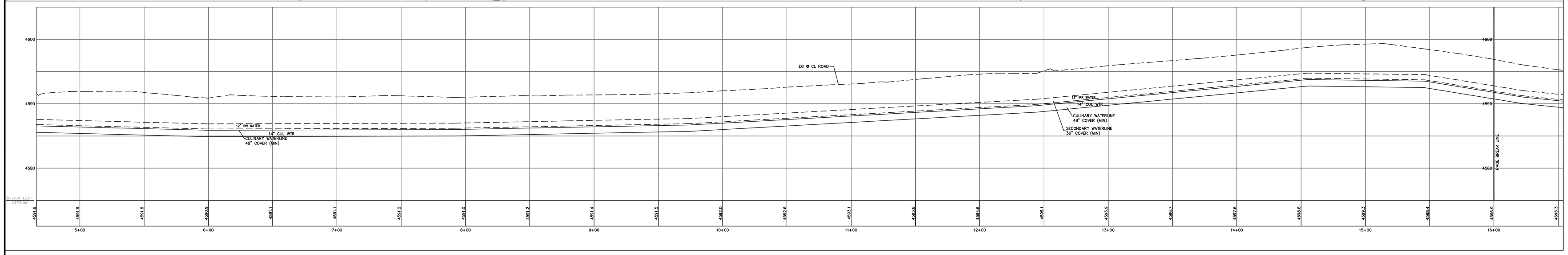

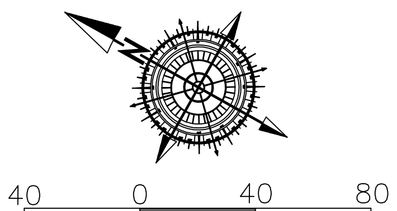

LEGEND

SEWER LINE
SEWER APPARATUS
STORM LINE
STORM APPARATUS
WATER LINE
WATER APPARATUS
FIRE HYDRANT
IRRIGATION LINE
IRRIGATION APPARATUS
DRAINAGE AREA (DRAINAGE REPORT)

EXISTING SEWER LINE
EXISTING STORM LINE
EXISTING IRRIGATION LINE
EXISTING CONTOURS (2FT)
EXISTING EDGE OF ASPHALT
EXISTING FENCE
EXISTING OVERHEAD POWER
10' FINISH CONTOUR
2' FINISH CONTOUR
10' FINISH CONTOUR
PHASE LINE
CURB & GUTTER
PROPOSED TRAIL
PUE
SETBACK
30% SLOPE AND GREATER
PROPOSED OPEN SPACE
DRAINAGE DIRECTION

NO.	DESCRIPTION	DATE	APP'D

ORIG. DATE: 03-01-06
SURVEY BY:
DRAWN BY: GPW
DESIGNED BY: GPW
CHECKED BY: GPW
SCALE: 1"=40'

GATEWAY CONSULTING, inc.
P.O. BOX 951005 SOUTH JORDAN, UT 84095
PH: (801) 694-5648 FAX: (801) 432-7050
paul@gatewayconsultingllc.com
CIVIL ENGINEERING • CONSULTING • LAND PLANNING
CONSTRUCTION MANAGEMENT

SAILHOUSE
PLAN AND PROFILE
REDWOOD ROAD
STA: 4+00 TO 15+00

P7-PLANPRO 3D
DRAWING FILE

PROJECT NUMBER

9-20-14
PLOT DATE

SARATOGA CITY

PRELIMINARY NOT FOR CONSTRUCTION

SHEET NO. P9

EX LAKEHARBOR BAY

FUTURE LIGHT HOUSE PROJECT

INSTALL 14" CULINARY TEE AND VALVES

INSTALL 12" IRRIG TEE AND VALVES

INSTALL 14" CULINARY VALVE

PARCEL A
0.76 ac
dedicated to UDOT for 60' 1/2 width

PARCEL B
1.00 ac (OPEN SPACE)
30' trail corridor
dedicated to city

EDGE OF EX ASPHALT

INSTALL 14" CULINARY VALVE

CL REDWOOD

UDOT ROW

EX REDWOOD ROAD

CITY ROW

UDOT ROW

INSTALL 12" IRRIG WATERLINE

INSTALL 14" CULINARY WATERLINE

UDOT ROW

INSTALL 12" IRRIG VALVE

INSTALL 12" IRRIG VALVE

FUTURE CITY ROW

FUTURE BEACON POINT PROJECT

FUTURE LIGHT HOUSE PROJECT

1
13583 SF

52
12226 SF

51
9000 SF

3

50

PARCEL
3.78 a
d

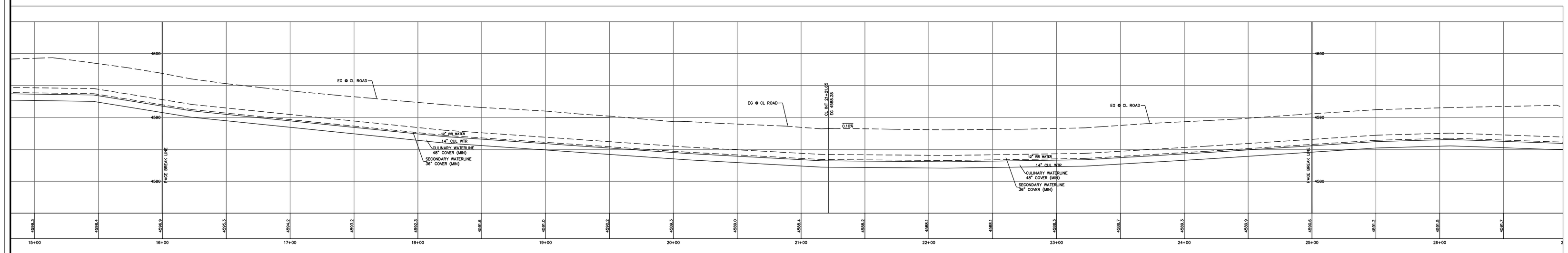

40 0 40 80

SCALE IN FEET
1"=40' HORIZONTAL
1"=4' VERTICAL

LEGEND

SEWER LINE
SEWER APPARATUS
STORM LINE
STORM APPARATUS
WATER LINE
WATER APPARATUS
FIRE HYDRANT
IRRIGATION LINE
IRRIGATION APPARATUS
DRAINAGE AREA (DRAINAGE REPORT)

EXISTING SEWER LINE
EXISTING STORM LINE
EXISTING WATER LINE
EXISTING IRRIGATION LINE
EXISTING CONTOURS (2FT)
EXISTING EDGE OF ASPHALT
EXISTING FENCE
EXISTING OVERHEAD POWER
10' FINISH CONTOUR
2' FINISH CONTOUR
10' FINISH CONTOUR
PHASE LINE
CURB & GUTTER
PROPOSED TRAIL
PUE
SETBACK
30% SLOPE AND GREATER
PROPOSED OPEN SPACE
DRAINAGE DIRECTION

NO.	DESCRIPTION	DATE	APP'D

ORIG. DATE: 03-01-06
SURVEY BY:
DRAWN BY: GPW
DESIGNED BY: GPW
CHECKED BY: GPW
SCALE: 1"=40'

GATEWAY CONSULTING, inc.
P.O. BOX 951005 SOUTH JORDAN, UT 84095
PH: (801) 694-3848 FAX: (801) 432-7050
patil@gatewayconsultingllc.com
CIVIL ENGINEERING - CONSULTING - LAND PLANNING
CONSTRUCTION MANAGEMENT

SAILHOUSE
PLAN AND PROFILE

REDWOOD ROAD
STA: 15+00 TO 25+50

P8-PLANPO 3D
DRAWING FILE

PROJECT NUMBER

9-20-14
PLOT DATE

SARATOGA CITY

PRELIMINARY
NOT FOR
CONSTRUCTION

SHEET NO. P10

PARCEL A
0.76 ac.
dedicated to UDOT for 60' 1/2 width

PARCEL B
1.00 ac (OPEN SPACE)
30' trail corridor
dedicated to city

FUTURE LIGHT HOUSE PROJECT

SAIL HOUSE BOUNDARY

INSTALL 14" CULINARY TEE AND VALVES
INSTALL 12" IRRIG TEE AND VALVES
INSTALL 14" CULINARY VALVE

SEE SAIL HOUSE DRAWINGS

EDGE OF EX ASPHALT
INSTALL 14" CULINARY VALVE
UDOT ROW
UDOT ROW
CL REDWOOD
EX REDWOOD ROAD
UDOT ROW
INSTALL 12" IRRIG WATERLINE
INSTALL 14" CULINARY WATERLINE
INSTALL 12" IRRIG VALVE
INSTALL 12" IRRIG VALVE
FUTURE CITY ROW
FUTURE CITY ROW

FUTURE BEACON POINT PROJECT

PARCEL C
3.78 ac (OPEN SPACE)
drainage and detention
dedicated to city
maintained by city

FUTURE BEACON POINT PROJECT

53 9967 SF
54 9000 SF
55 9072 SF
56 16878 SF

GREENSAGE COURT
ROAD 9

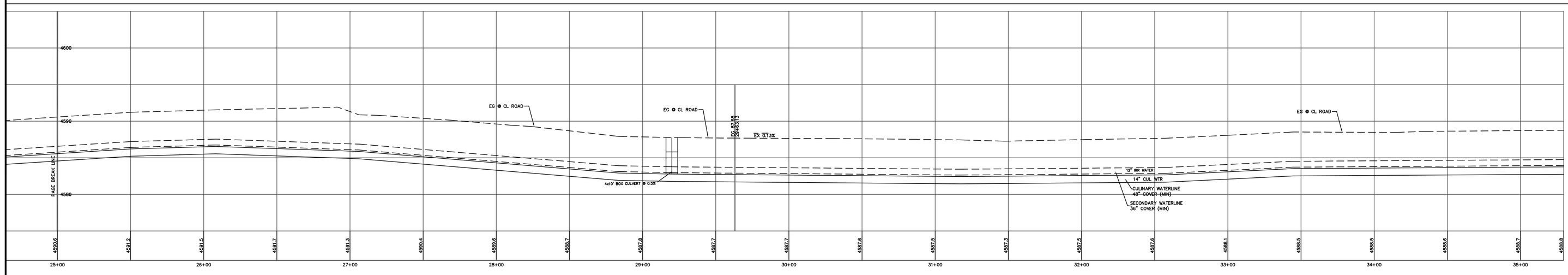

40 0 40 80
SCALE IN FEET
1"=40' HORIZONTAL
1"=4' VERTICAL

LEGEND

SEWER LINE
SEWER APPARATUS
STORM LINE
STORM APPARATUS
WATER LINE
WATER APPARATUS
FIRE HYDRANT
IRRIGATION LINE
IRRIGATION APPARATUS
DRAINAGE AREA (DRAINAGE REPORT)

EXISTING SEWER LINE
EXISTING STORM LINE
EXISTING WATER LINE
EXISTING IRRIGATION LINE
EXISTING CONTOURS (2FT)
EXISTING EDGE OF ASPHALT
EXISTING FENCE
EXISTING OVERHEAD POWER
10' FINISH CONTOUR
2' FINISH CONTOUR
10' FINISH CONTOUR
PHASE LINE
CURB & GUTTER
PROPOSED TRAIL
PVE
SETBACK
30% SLOPE AND GREATER
PROPOSED OPEN SPACE
DRAINAGE DIRECTION

NO.	DESCRIPTION	DATE	APP'D

ORIG. DATE: 03-01-06
SURVEY BY:
DRAWN BY : GPW
DESIGNED BY : GPW
CHECKED BY : GPW
SCALE : 1"=40'

GATEWAY CONSULTING, inc.
P.O. BOX 951095 SOUTH JORDAN, UT 84095
PH: (801) 694-5848 FAX: (801) 432-7050
paul@gatewayconsultingllc.com
CIVIL ENGINEERING • CONSULTING • LAND PLANNING
CONSTRUCTION MANAGEMENT

SAILHOUSE
PLAN AND PROFILE

REDWOOD ROAD
STA: 25+00 TO 35+50

PROJECT NUMBER
PB-PLANPD 3D
DRAWING FILE
9-20-14
PLOT DATE

SARATOGA CITY

PRELIMINARY NOT FOR CONSTRUCTION

SHEET NO. P11

SAIL HOUSE

OVERALL GRADING AND DRAINAGE PLAN

SARATOGA CITY

PRELIMINARY NOT FOR CONSTRUCTION

SHEET NO. DR—1

DATE: 9-20-14 | PROJECT NUMBER | DRAWING FILE

GATEWAY CONSULTING, inc.
P.O. BOX 951005 SOUTH JORDAN, UT 84095
PH: (801) 694-5848 FAX: (801) 432-7050
paul@gatewayconsultingllc.com

CIVIL ENGINEERING • CONSULTING • LAND PLANNING
CONSTRUCTION MANAGEMENT

ORIG. DATE: GPW
SURVEY BY:
DRAWN BY : GPW
DESIGNED BY : GPW
CHECKED BY : GPW
SCALE : 1"=80'

NO.	DESCRIPTION	DATE	APP'D

LEGEND

SEWER LINE — EXISTING SEWER LINE; EXISTING STORM LINE; EXISTING WATER LINE; EXISTING CONTOURS (2FT); EXISTING EDGE OF ASPHALT; EXISTING FENCE; EXISTING OVERHEAD POWER; 10' FINISH CONTOUR; 2' FINISH CONTOUR; 10' FINISH CONTOUR; PHASE LINE; CURB & GUTTER; PROPOSED TRAIL; PUE; SETBACK; 30% SLOPE AND GREATER; PROPOSED OPEN SPACE; DRAINAGE DIRECTION

SEWER APPARATUS — SEWER MANHOLE; 4" SEWER SERVICE; 6" SEWER SERVICE

STORM LINE

STORM APPARATUS — CURB INLET; CATCH BASIN; 24" RCP STORM DRAIN; 4' DIA. STORM DRAIN MANHOLE

WATER LINE

WATER APPARATUS — 8" C-900 WATER LINE; 6" C-900 WATER LINE

FIRE HYDRANT — EXISTING FIRE HYDRANT; PROPOSED FIRE HYDRANT

IRRIGATION LINE

IRRIGATION APPARATUS — 8" C-900 IRRIGATION LINE; 6" C-900 IRRIGATION LINE

DRAINAGE AREA (DRAINAGE BASIN)

N

SCALE IN FEET
80 0 80 160
1"=80' (24"x36" SHEET ONLY)

Utah Lake

DET POND

100 yr storm high water mark (6' above ex water level) elev. 4497.7

DRAINAGE AREA #1 OVERALL= 24,987 SF HARD SURFACE = 7,933 SF LOT = 17,054 SF

DRAINAGE AREA #2 OVERALL= 65,064 SF HARD SURFACE = 9,275 SF LANDSCAPED = 6,944 SF LOT = 48,845 SF

DRAINAGE AREA #3 OVERALL= 91,346 SF HARD SURFACE = 6,695 SF LANDSCAPE=5,792 SF LOT = 78,862 SF

DRAINAGE AREA #4 OVERALL= 125,244 SF HARD SURFACE= 14,610 SF LOT = 110,634 SF

DRAINAGE AREA #5 OVERALL= 32,754 SF HARD SURFACE = 8,390 SF LOT = 24,464 SF

DRAINAGE AREA #6 OVERALL= 269,591 SF HARD SURFACE = 14,767 SF LOT = 254,824 SF

DRAINAGE AREA #7 OVERALL= 19,766 SF HARD SURFACE =19,766 SF

DRAINAGE AREA #8 OVERALL= 26,893 SF HARD SURFACE = 7953 SF LANDSCAPE = 3,635 SF LOT = 15,305 SF

DRAINAGE AREA #9 OVERALL= 85,002 SF NATURAL = 20,907 SF LOT = 64,095 SF

DRAINAGE AREA #10 OVERALL= 187,558 SF HARD SURFACE = 18,931 SF LOT = 168,627 SF

DRAINAGE AREA #11 OVERALL= 26,290 SF HARD SURFACE = 11,686 SF LOT = 14,604 SF

DRAINAGE AREA #12 OVERALL= 1,014,012 SF HARD SURFACE = 11,917 SF NATURAL = 1,002,095 SF

DRAINAGE AREA #13 OVERALL= 62,202,475 SF HARD SURFACE= 21,147 SF NATURAL = 62,181,328 SF

DRAINAGE AREA #14 OVERALL= 3,070,534 SF HARD SURFACE = 46,707 SF LANDSCAPE = 25,489 SF NATURAL = 2,988,694 SF LOT = 9644 SF

DRAINAGE AREA #15 OVERALL= 3,761,289 SF HARD SURFACE = 44,756 SF LANDSCAPE = 21,377 SF NATURAL = 3,695,111 SF

DRAINAGE AREA #16 OVERALL= 32,386 SF HARD SURFACE = 11,734 SF LOT = 20,652 SF

DRAINAGE AREA #17 OVERALL= 83,393 SF HARD SURFACE = 24,987 SF LOT = 58,406 SF

DRAINAGE AREA #18 OVERALL= 45,804 SF HARD SURFACE = 15,723 SF LOT = 30,081 SF

DRAINAGE AREA #19 OVERALL= 13,687 SF HARD SURFACE = 12,439 SF LOT = 1248 SF

DRAINAGE AREA #20 OVERALL= 8,771 SF HARD SURFACE = 8,771 SF

DRAINAGE AREA #21 OVERALL= 17,802 SF HARD SURFACE = 5,960 SF LOT = 11,842 SF

DRAINAGE AREA #22 OVERALL= 41,121 SF HARD SURFACE = 10,283 SF LOT = 30,838 SF

DRAINAGE AREA #23 OVERALL= 22,003 SF HARD SURFACE = 7,702 SF LOT = 14,321 SF

DRAINAGE AREA #24 OVERALL= 104,252 SF HARD SURFACE = 19,374 SF LOT = 84,878 SF

DRAINAGE AREA #25 OVERALL= 18,734 SF HARD SURFACE = 12,246 SF LOT = 6,488 SF

DRAINAGE AREA #26 OVERALL= 95,518 SF HARD SURFACE = 8,664 SF LOT = 86,854 SF

DRAINAGE AREA #27 OVERALL= 36,013 SF HARD SURFACE = 9,955 SF LOT = 26,058 SF

DRAINAGE AREA #28 OVERALL= 53,957 SF HARD SURFACE= 10,739 SF LOT=43,218 SF

DRAINAGE AREA CONT.

Redwood Road (Utah Hwy 68)

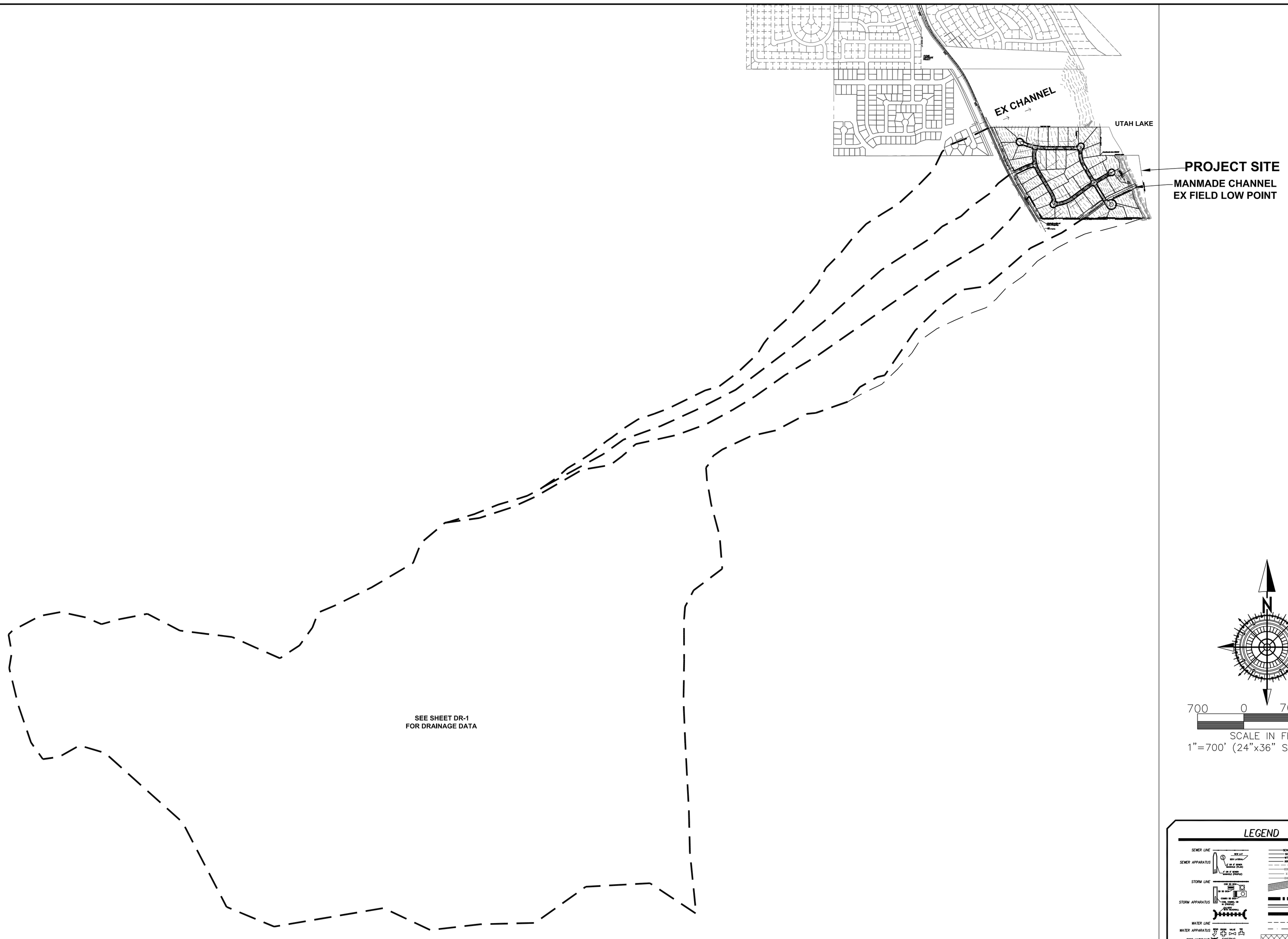

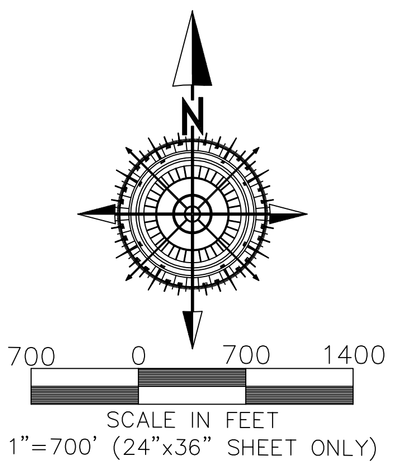

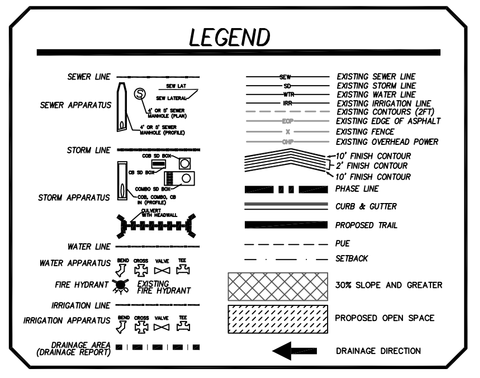

NO.	DESCRIPTION	DATE	APP'D

ORIG. DATE:
SURVEY BY:
DRAWN BY: CPW
DESIGNED BY: CPW
CHECKED BY: CPW
SCALE: 1"=700'

GATEWAY CONSULTING, inc.
P.O. BOX 951005 SOUTH JORDAN, UT 84095
PH: (801) 694-5848 FAX: (801) 432-7050
paul@gatewayconsultingllc.com
CIVIL ENGINEERING - CONSULTING - LAND PLANNING
CONSTRUCTION MANAGEMENT

SAIL HOUSE

OFFSITE DRAINAGE BASIN DELINEATION
FOR DRAINAGE REPORT

DRAWING FILE:
PROJECT NUMBER:
DATE: 9-20-14

SARATOGA CITY

PRELIMINARY
NOT FOR
CONSTRUCTION

SHEET NO. DR-2

NEW PAINT PLAN

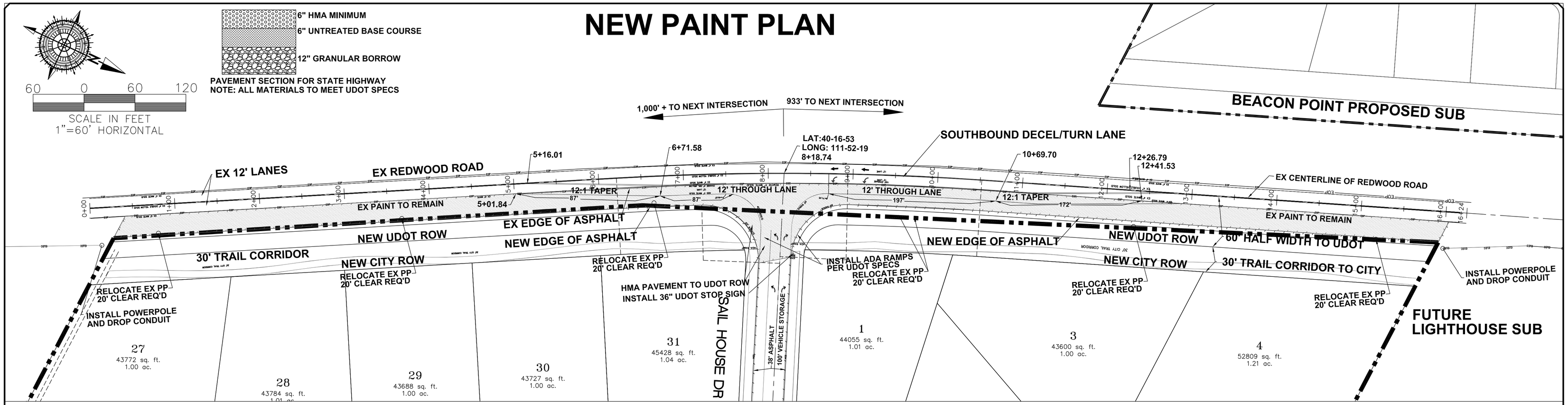

EXISTING PAINT PLAN

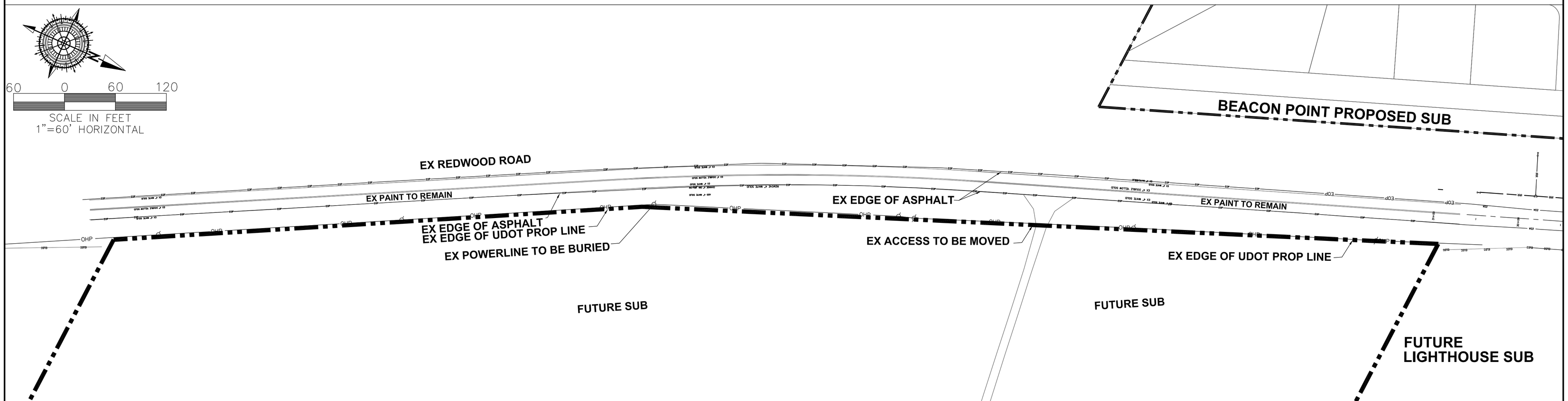

NO.	DESCRIPTION	DATE	APP'D

ORIG. DATE: 1-1-12
SURVEY BY:
DRAWN BY: CPW
DESIGNED BY: CPW
CHECKED BY: CPW
SCALE: 1"=60'

GATEWAY CONSULTING, inc.
P.O. BOX 95 1005 SOUTH JORDAN, UT 84095
PH: (801) 694-5848 FAX: (801) 432-7050
paul@gatewayconsultingllc.com
CIVIL ENGINEERING • CONSULTING • LAND PLANNING
CONSTRUCTION MANAGEMENT

SAIL HOUSE
REDWOOD ROAD
OLD VS NEW PAINT
DRAWING FILE
PROJECT NUMBER
9-20-14
PLOT DATE

SARATOGA
CITY

PRELIMINARY
NOT FOR
CONSTRUCTION

SHEET NO. SS-1

SAIL HOUSE

SIGNAGE & STRIPING PLAN

SARATOGA CITY

SHEET NO. SS-2

9-20-14 PLOT DATE | PROJECT NUMBER | DRAWING FILE

GATEWAY CONSULTING, Inc.
P.O. BOX 951005 SOUTH JORDAN, UT 84095
PH: (801) 694-5848 FAX: (801) 432-7050
paul@gatewayconsultingllc.com

CIVIL ENGINEERING • CONSULTING • LAND PLANNING
CONSTRUCTION MANAGEMENT

ORIG. DATE:	05-01-12
SURVEY BY:	
DRAWN BY :	GPW
DESIGNED BY :	GPW
CHECKED BY :	GPW
SCALE :	1"=80'

NO.	DESCRIPTION	DATE	APP'D

LEGEND

EXISTING SEWER LINE
EXISTING STORM LINE
EXISTING IRRIGATION LINE
EXISTING WATER LINE
EXISTING EDGE OF ASPHALT
EXISTING FENCE
EXISTING OVERHEAD POWER
EXISTING CONTOUR
PROPOSED CONTOUR
1' FINISH CONTOUR
10' FINISH CONTOUR
PHASE LINE
CURB & GUTTER
PUE
PROPOSED TRAIL
SETBACK
30% SLOPE AND GREATER
PROPOSED OPEN SPACE
DRAINAGE DIRECTION

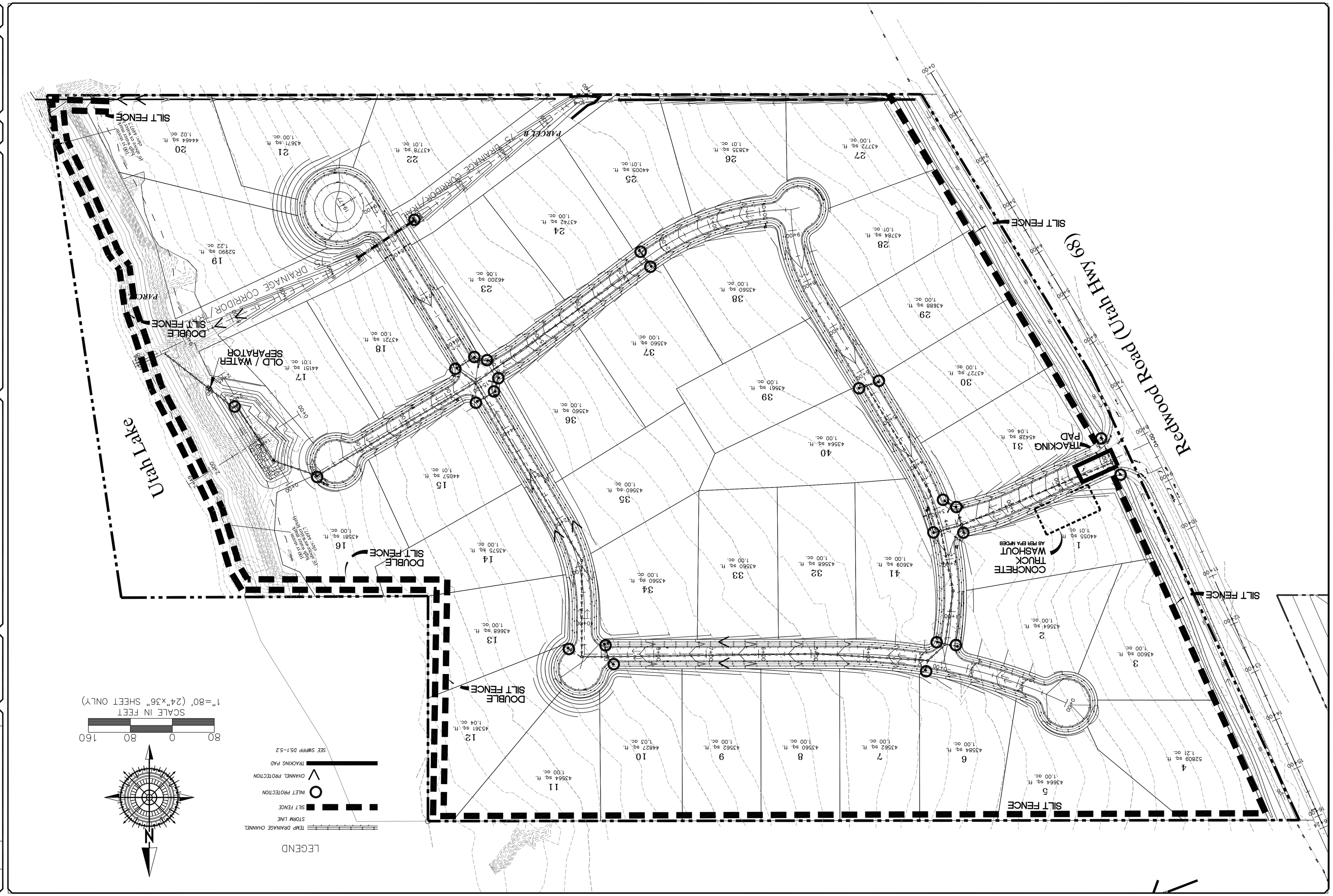

SHEET NO. SWPPP

PRELIMINARY NOT FOR CONSTRUCTION

SARATOGA CITY

SAIL HOUSE

STORM WATER POLLUTION PROTECTION PLAN (SWPPP)

9-20-14
PLOT DATE

PROJECT NUMBER

DRAWING FILE

GATEWAY CONSULTING, inc.
P.O. BOX 951005 SOUTH JORDAN, UT 84095
PH: (801) 694-5848 FAX: (801) 432-7050
paul@gatewayconsultingllc.com
CIVIL ENGINEERING • CONSULTING • LAND PLANNING
CONSTRUCTION MANAGEMENT

ORIG. DATE: 01-1-12
SURVEY BY:
DRAWN BY: GPW
DESIGNED BY: GPW
CHECKED BY: GPW
SCALE: 1"=80'

NO.	DESCRIPTION	DATE	APP'D

GENERAL EROSION CONTROL NOTES

DURING CONSTRUCTION

GENERAL EROSION CONTROL NOTES:
1. AT ALL TIMES DURING CONSTRUCTION, THE CONTRACTOR SHALL BE RESPONSIBLE FOR PREVENTING AND CONTROLLING EROSION DUE TO WIND AND RUNOFF, THE CONTRACTOR SHALL ALSO BE RESPONSIBLE FOR MAINTAINING EROSION CONTROL FACILITIES SHOWN.

2. ADDITIONAL EROSION CONTROL MEASURES MAY BE REQUIRED DUE TO UNFORESEEN PROBLEMS OR IF THE PLAN DOES NOT FUNCTION AS INTENDED. A REPRESENTATIVE OF THE SARATOGA SPRINGS CITY PUBLIC WORKS DEPARTMENT MAY REQUIRE ADDITIONAL CONTROL DEVISES UPON INSPECTION OF PROPOSED FACILITIES.

3. THE CONTRACTOR IS RESPONSIBLE FOR KEEPING THE STREETS CLEAN AND FREE FROM DEBRIS FROM TRAFFIC FROM THE SITE.

4. ALL STORM DRAIN FACILITIES ON SITE AND ADJACENT TO THE SITE NEED TO BE PROTECTED FROM SITE RUNOFF. INLET PROTECTION DEVICES SHALL BE INSTALLED IMMEDIATELY UPON INDIVIDUAL INLETS BECOMING FUNCTIONAL.

5. ALL AREAS DISTURBED DURING CONSTRUCTION SHALL BE PAVED, SEEDED WITH NATIVE VEGETATION, OR LANDSCAPED. REFER TO LANDSCAPE PLANS FOR SEED MIX. AND PLANTING SPECIFICATIONS.

6. EROSION CONTROL STRUCTURES BELOW SODDED AREAS MAY BE REMOVED ONCE SOD AND FINAL LANDSCAPING ARE IN PLACE. EROSION CONTROL STRUCTURES BELOW SEEDED AREAS MUST REMAIN IN PLACE UNTIL THE ENTIRE AREA HAS ESTABLISHED A MATURE COVERING OF HEALTHY VEGETATIONS. EROSION CONTROL IN PROPOSED PAVEMENT AREAS SHALL REMAIN N PLACE UNTIL PAVEMENT IS COMPLETE.
7. CONTRACTOR SHALL USE VEHICLE TRACKING CONTROL AT ALL LOCATIONS WHERE VEHICLES WILL ENTER OR EXIT THE SITE. CONTROL FACILITIES WILL BE MAINTAINED WHILE CONSTRUCTION IS IN PROGRESS, MOVED WHEN NECESSARY AND REMOVED WHEN THE SITE IS PAVED.

8. ALL WASH WATER (CONCRETE TRUCKS, VEHICLE CLEANING, ETC.) SHALL BE DISPOSED OF IN A MANNER THAT PREVENTS CONTACT WITH STORM WATER DISCHARGES FROM THE SITE.

9. BLOWING DUST MUST BE CONTROLLED AT ALL TIMES. INSTALLATION OF A SILT SCREEN AND SITE WATERING SHALL BE USED TO CONTROL DUST, THE USE OF MOTOR OILS AND OTHER PETROLEUM BASED OR TOXIC LIQUIDS FOR DUST SUPPRESSION OPERATIONS IS ABSOLUTELY PROHIBITED.

10. THE CONTRACTOR SHALL BE RESPONSIBLE FOR ADJUSTING THE EROSION CONTROL MEASURES (SILT FENCES, STRAW BALES, ETC.) DUE TO GRADE CHANGES DURING THE. DEVELOPMENT OF THE PROJECT.

11. ALL OFF-SITE CONSTRUCTION SHALL BE STABILIZED AT THE END OF EACH WORKING DAY. THIS INCLUDES BACKFILLING OF TRENCHES FOR UTILITY CONSTRUCTION AND PLACEMENT OF BITUMINOUS PAVING FOR ROAD CONSTRUCTION.

12. ALL MEASURES CONTAINED IN THIS PLAN MAINTAINED IN FULLY FUNCTIONAL CONDITION UNTIL FINAL STABILIZATION OF THE SITE, ALL EROSION AND SEDIMENTATION CONTROL MEASURES SHALL BE CHECKED BY A QUALIFIED PERSON AT LEAST ONCE EVERY SEVEN CALENDAR DAYS AND WITHIN 24 HOURS OF THE END OF A RAINFALL EVENT. ANY NEEDED CLEANING AND REPAIRS NEED TO BE DONE IMMEDIATELY UPON DISCOVERY.

13. ALL UTILITY LINES SHALL BE CLEANED OF DIRT AND DEBRIS PRIOR TO BEING PUT IN TO SERVICE. DOWNGRADE LINES MUST BE PROTECTED FROM WASH-WATER DURING THE CLEANING TO AVOID CONTAMINATION AND COMPROMISING OUTFALL CLEANLINESS.

ADDITIONAL EROSION CONTROL NOTES

POST CONSTRUCTION

1. THE CUT SLOPES ARE PROGRAMMED AS SHOWN. TOPS OF 3:1 & 2:1 CUTS THAT OCCUR IN TOP SOIL WILL BE ROUNDED TO BLEND INTO NATURAL TERRAIN.

2. EXCAVATED MATERIAL TO BE STOCKPILED IN AREAS TO BE DETERMINED IN THE FIELD BY THE ENGINEER, CONTRACTOR, COUNTY REVIEW ENGINEER AND COUNTY INSPECTOR.

3. CONTRACTOR SHALL CONFINE CONSTRUCTION ACTIVITY TO AREAS WITHIN THE FLAGGED LIMITS OF DISTURBANCE AND AS SHOWN ON THE PLANS AND WITHIN FIELD DESIGNATED STORAGE, STAGING ACCESS. CONSTRUCTION AND MATERIAL WASTE AREAS AS APPROVED BY THE COUNTY ENGINEER.

4. CONTRACTOR SHALL ABIDE BY EROSION CONTROL REQUIREMENTS AS SET FORTH HEREIN.

5. ORGANIC MATERIALS WILL BE SEPARATED, REMOVED FROM THE ROAD BEDS AND STOCKPILED IN LOCATIONS TO BE DETERMINED IN THE FIELD BY THE ENGINEER, CONTRACTOR AND COUNTY INSPECTOR. NO ORGANIC MATERIAL WILL BE PLACED IN THE STRUCTURAL FILLS AREA.

6. AFTER CLEARING AND GRUBBING OPERATIONS, TOPSOIL IS TO BE STOCKPILED IN AREAS TO BE DETERMINED IN FIELD BY THE ENGINEER, CONTRACTOR, COUNTY REVIEW ENGINEER AND COUNTY INSPECTOR. NO ORGANIC MATERIAL OR ROCK LARGER THAN 24" WILL BE PLACED IN ROADWAY FILLS. 12" MINUS IN TOP 1' OF ROADWAY.

7. NO BRUSH OR TOPSOIL SHALL BE STOCKPILED WITHIN THE ROADWAY RIGHT OF WAYS.

8. ALL FILL SLOPES WILL BE GRADED AS SHOWN OR AS DETERMINED BY A GEOTECHNICAL ENGINEER. COMPACTION OF EMBANKMENT FILLS WILL BE CONSTRUCTED TO WASATCH COUNTY ROADWAY STANDARDS. FILL AREAS SHALL BE CLEARED, GRUBBED, STRIPPED OF SOIL AND SCARIFIED PRIOR TO PLACEMENT OF SUITABLE EMBANKMENT MATERIAL.

9. ALL DISTURBED AREAS WILL BE REVEGETATED ACCORDING TO REVEGETATION / EROSION CONTROL NOTES WITH A GRASS MIXTURE AS FOLLOWS APPLIED AT A MINIMUM RATE OF 50 LBS. PLS (PURE LIVE SEED PER ACRE WITH MIX)

NATIVE GRASSES

% Pure	Grass Type
20.00	Hard fescue
15.00	Pubescent wheatgrass
15.00	Orchard grass (sod forming)
15.00	smooth brom grass
20.00	Stream bank wheat grass (sod forming)
15.00	Western wheat grass

TOPSOIL SHALL BE PLACED TO A DEPTH OF 6" ON ALL CUT AND FILL SLOPES 3:1 OR FLATTER.
REVEGETATION AREAS WILL BE SEEDED AND MULCHED AS SOON AS POSSIBLE AFTER CONSTRUCTION COMPLETION.

10. SILT FENCING WILL BE HELD IN PLACE WITH 2 X 2 STAKES AND WILL BE PLACED ON THE DOWNHILL SIDES OF ALL DISTURBED AREAS AND AREAS USED FOR STOCKPILING AND TRENCHED INTO GROUND.

11. THE SILT FENCING SHALL BE INSTALLED BEFORE CLEARING AND GRUBBING AT THE TOE OF THE DISTURBED DOWNHILL SLOPE. NO GRUBBED AREA SHALL BE WITHOUT SILT FENCE PROTECTION FOR LONGER THAN 24 HOURS. THE SILT FENCE SHALL BE MONITORED AND REPLACED IF NECESSARY.

12. ALL SITE DRAINAGE SHALL BE ADEQUATELY PROVIDED FOR DURING CONSTRUCTION.

13. NATURAL VEGETATION WILL BE PRESERVED AND PROTECTED AS MUCH AS POSSIBLE AND VEGETATION REMOVAL WILL BE MINIMIZED.

14. DRAINAGE WAYS AND OUTLETS WILL BE PROTECTED FROM INCREASED FLOWS AND EROSION.

15. THE CONTRACTOR SHALL NOTIFY ALL OWNERS OF UTILITIES INCLUDING BUT NOT LIMITED TO WATER, SANITARY SEWER, TELEPHONE, ELECTRICAL, NATURAL GAS AND CABLE TELEVISION, OF THE PROPOSED CONSTRUCTION WITHIN THE UTILITIES AREA OF OPERATIONS. THE CONTRACTOR IS RESPONSIBLE FOR MEETING WITH AND COORDINATING CONSTRUCTION ACTIVITIES WITH THOSE OF THE UTILITY COMPANIES INVOLVED WITH FIELD LOCATION OF ALL EXISTING UTILITIES WITHIN THE AREA OF OPERATIONS. SHOULD THE CONTRACTOR EXPERIENCE A FAILURE BY THE UTILITY COMPANIES TO COMPLY WITH THEIR RESPONSIBILITY OF RELOCATING OR ADJUSTING THEIR FACILITIES, IF ANY, THE OWNER MUST BE NOTIFIED IN WRITING. IT IS THE CONTRACTORS RESPONSIBILITY TO VERIFY THE LOCATION OF ALL UTILITIES PRIOR TO THE COMMENCEMENT OF ANY CONSTRUCTION.

16. THE CONTRACTOR SHALL FOLLOW AS APPLICABLE, UNLESS STANDARDS HAVE BEEN WAIVED OR MODIFIED:
- UNIFORM BUILDING CODE, 1997 EDITION, APPENDIX CHAPTER A33, EXCAVATING AND GRADING
- SARATOGA SPRINGS CITY CODE
- UNIFORM FIRE CODE

17. FINISH GRADES ARE AT ROADWAY CENTERLINE, UNLESS OTHERWISE SPECIFICALLY NOTED.

18. NATIVE MATERIAL CAN BE CRUSHED AND PROCESSED ON SITE FOR ROAD BASE MATERIAL.

19. TEMP. DEBRIS PILES WILL BE LOCATED EVERY 200' AS NEEDED.

20. ALL ROADWAYS, TRENCHES, DETENTION PONDS AND/OR EXCAVATIONS OF ANY KIND REQUIRING FILL MATERIAL WILL BE INSPECTED AND APPROVED BY THE OWNERS QUALITY CONTROL FIRM PRIOR TO THE PLACEMENT OF ANY FILL MATERIAL.

21. ALL FILL OR BACK FILL, WHETHER IMPORT OR NATIVE SOILS, WILL BE TESTED FOR DENSITY, MOISTURE AND BEARING AT REGULAR INTERVALS THROUGH THE COURSE OF THE FILL PLACEMENT. ALL FILLS WILL BE PLACED IN LIFTS AS PER THE PLANS AND SARATOGA SPRINGS CITY SPECIFICATIONS. CONTRACTOR IS RESPONSIBLE TO NOTIFY THE THE GEOTECH 24 HOURS IN ADVANCE OF SCHEDULED FILL PLACEMENT.

22. IN THE EVENT OF DISCREPANCIES BETWEEN BID DOCUMENTS AND EXISTING ONSITE CONDITIONS, CONTRACTOR WILL 1) IMMEDIATELY HALT WORK ACTIVITY AND NOTIFY DESIGN ENGINEER OF ANY SUCH DISCREPANCIES 2) UPON RESOLUTION OF DISCREPANCIES, CONTRACTOR WILL SUBMIT COST OF CHANGED CONDITION, IF ANY. 3) PROCEED WITH WORK AFTER RECEIPT OF WRITTEN NOTICE TO COMMENCE WORK.

23. CONTRACTOR WILL, PRIOR TO INSTALLATION PREPARE AND SUBMIT PRODUCT DATA AND DETAILS FOR MATERIAL USED IN CONJUNCTION WITH THIS PRODUCT IE. OVERFLOW STRUCTURES, DRAINAGE PIPE, FILTER FABRICS, EROSION BLANKETS, GROUT, GUARDRAILS, ROAD SIGNS, ETC.

24. CUT AND FILL SLOPES MATTING TO BE SEEDED AND TOPSOILED PRIOR TO PLACEMENT OF EROSION BLANKETS.

25. STAPLE PATTERNS ON EROSION MATS PER SUPPLIERS SPECS

EROSION CONTROL BLANKET – ALL REQUIRED GRADING AND SEEDING IN AREAS TO RECEIVE EROSION CONTROL BLANKET SHOULD BE COMPLETED AND APPROVED BEFORE PLACING THE PRODUCT. APPLY THE BLANKET WITHIN 24 HOURS AFTER SEEDING OR BEFORE PRECIPITATION FALLS. IF THE BLANKET IS NOT INSTALLED AND A PRECIPITATION EVENT OCCURS, CREATING SOIL EROSION, REPLACE ERODED MATERIAL, REWORK THE SOIL, AND RESEED BEFORE INSTALLING THE BLANKET. INSTALL THE EROSION CONTROL BLANKET OR CHANNEL LINER STRICTLY FOLLOWING MANUFACTURER'S SPECIFICATIONS. ALLOW THE BLANKET OR LINER TO LAY LOOSELY ON THE SOIL TO ACHIEVE MAXIMUM SOIL CONTACT. REMOVE ROOTS, BRANCHES, OR OTHER LOOSE OBJECTS THAT CAUSE THE BLANKET OR CHANNEL LINER TO "TENT". PLACE ROOTS AND BRANCHES ON AREAS ALREADY BLANKETED. DO NOT STRETCH THE BLANKET DURING INSTALLATION. STAPLE THE BLANKET OR LINER USING MANUFACTURER'S SPECIFICATIONS. STAPLE REQUIREMENTS VARY ACCORDING TO THE STEEPNESS AND LENGTH OF THE SLOPE. PLACE ADDITIONAL STAPLES IN AREAS SUCH AS: SWALES, BASE OF HUMPS, AGAINST ROCK OUTCROPS AND AS REQUIRED TO ACHIEVE MAXIMUM CONTACT BETWEEN THE BLANKET AND THE SOIL.

TOPSOIL – PLACE TOPSOIL JUST BEFORE SEEDING TO ELIMINATE COMPETITION FROM WEEDS, COORDINATE TOPSOIL PLACEMENT WITH THE SEEDING WINDOW.

SEEDING WINDOW – COMPLETE ALL GENERAL DISTURBED AREA SEEDING WITHIN THE APPROPRIATE SEEDING WINDOW. IF THE SEEDING IS NOT COMPLETED WITHIN THE GIVEN WINDOW, POSTPONE SEEDING UNTIL THE FOLLOWING YEAR. UNDER CERTAIN CONDITIONS, AN EXCEPTION TO THIS WINDOW MAY BE OBTAINED THROUGH THE REGION LANDSCAPE ARCHITECT. THE ENGINEER APPROVES EXCEPTIONS.

ELEVATION	SEEDING WINDOW
4000 TO 6000 FT	SEPT. 15 TO DEC. 1
ABOVE 6000 FT	SEPT. 1 TO NOV 15

RIPRAP – PLACE STONES TO SECURE A ROCK MASS, CONFORMING TO THE GRADES AND DIMENSIONS SHOWN ON THE PLANS. DISTRIBUTE AND MANIPULATE THE STONES IN A MANNER THAT THE LARGER ROCK FRAGMENTS ARE UNIFORMLY DISTRIBUTED AND THE SMALLER ROCK FRAGMENTS SERVE TO FILL THE SPACE BETWEEN THE LARGER FRAGMENTS. PLACE IN A MANNER THAT RESULTS IN UNSEGREGATED, DENSELY PLACED, UNIFORM LAYERS OF RIPRAP OF THE THICKNESS INDICATED ON THE PLANS. EXCAVATE AT THE TOE OF THE SLOPE AND EMBED RIPRAP TO PROTECT AGAINST UNDERCUTTING. COMPACT PROPERLY PLACED LOOSE RIPRAP SO THAT IT IS FREE FROM ANY IRREGULAR SURFACE PROTRUSIONS OVER 3 INCHES IN HEIGHT.

See Saratoga Springs specifications for further information.

NO.	DESCRIPTION	DATE	APP'D

ORIG. DATE: 1-1-12
SURVEY BY:
DRAWN BY : CPW
DESIGNED BY : CPW
CHECKED BY : CPW
SCALE : N/A

GATEWAY CONSULTING, inc
P.O. BOX 951005 SOUTH JORDAN, UT 84095
PH: (801) 694-5848 FAX: (801) 432-7050
paul@gatewayconsultingllc.com
CIVIL ENGINEERING - CONSULTING - LAND PLANNING
CONSTRUCTION MANAGEMENT

SAIL HOUSE
EROSION CONTROL NOTES
DRAWING FILE
PROJECT NUMBER
9-26-14

SARATOGA CITY

PRELIMINARY NOT FOR CONSTRUCTION

SHEET NO. ER-1

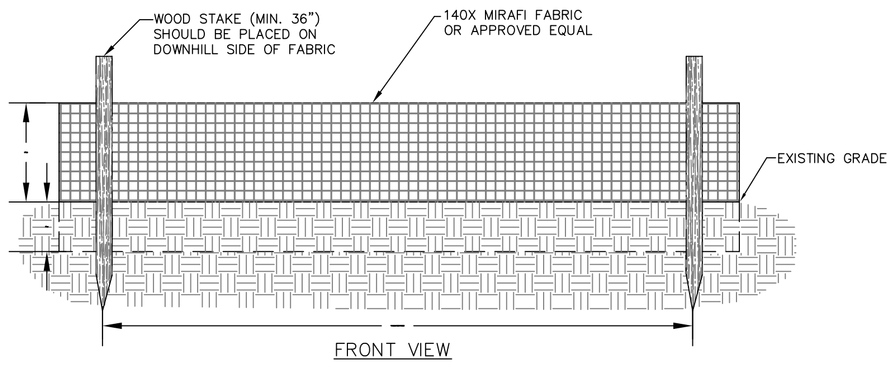

SILT FENCE DETAIL
NOT TO SCALE

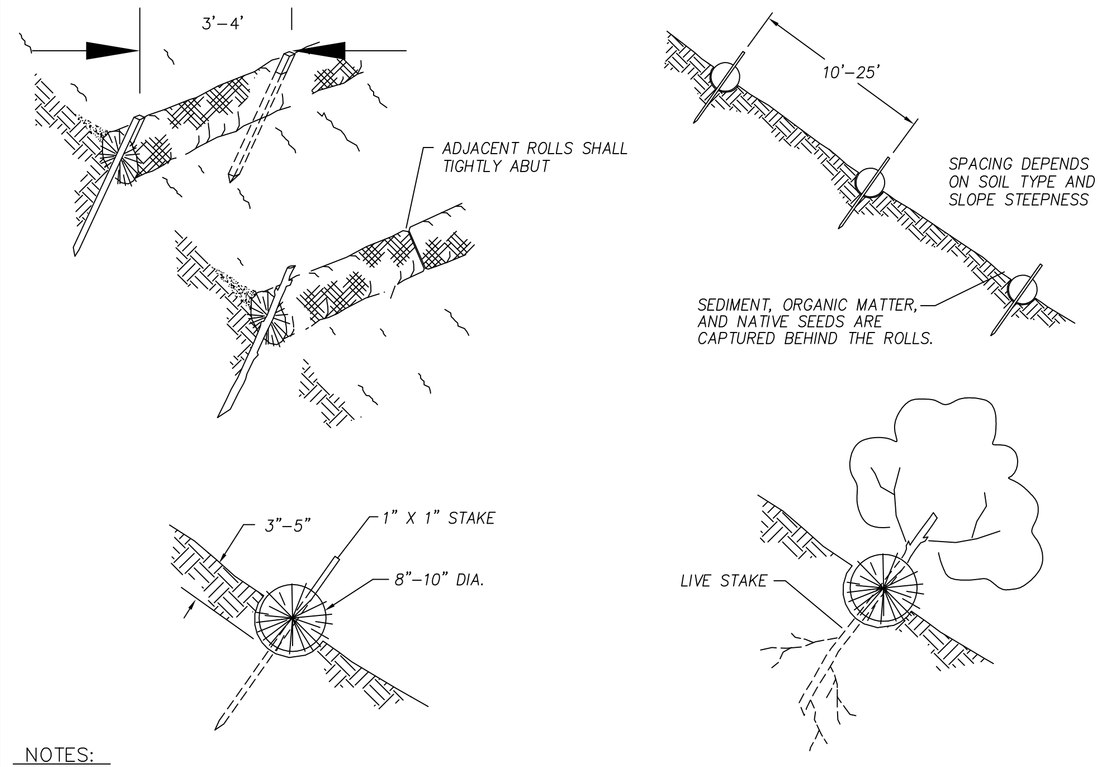

NOTES:
Straw wattles shall be installed as soon as construction will allow or when designated by the Engineer. Straw wattles shall be placed in shallow trenches and staked along the contour of disturbed or newly constructed slopes, in accordance with the Plans, perpendicular to the flow direction and parallel to the slope contour.

The wattles shall be installed at the intervals designated by the Engineer.

Trench construction and wattle installation shall begin from the base of the slope and work uphill. Excavated material shall be spread evenly along the uphill slope and compacted using hand tamping or other method approved by the Engineer. On gradually sloped or clay-type soils trenches shall be 2 to 3 inches deep. On loose soils, in high rainfall areas, or on steep slopes, trenches shall be 3 to 5 inches deep, or half the thickness of the wattle.

The wattle shall be install snugly into the trench, abutting adjacent wattles tightly, end to end, without overlapping the ends. Wattles shall be staked at each end and at 4 foot centers along their entire length. When trench conditions require, pilot holes for the stakes shall be driven through the wattle and into the soil using a straight bar. Stakes shall be driven through the middle of the wattle, leaving 2 to 3 inches of the stake protruding above the wattle.

Wattles shall be inspected regularly to ensure they remain thoroughly entrenched and in contact with the soil, and immediately after a runoff producing rainfall.

STRAW WATTLE (SILT FENCE ALTERNATIVE)
NOT TO SCALE

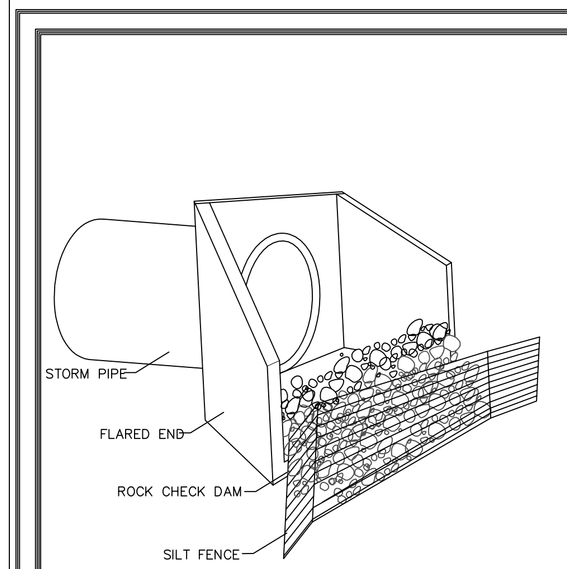

INLET PROTECTION
NOT TO SCALE

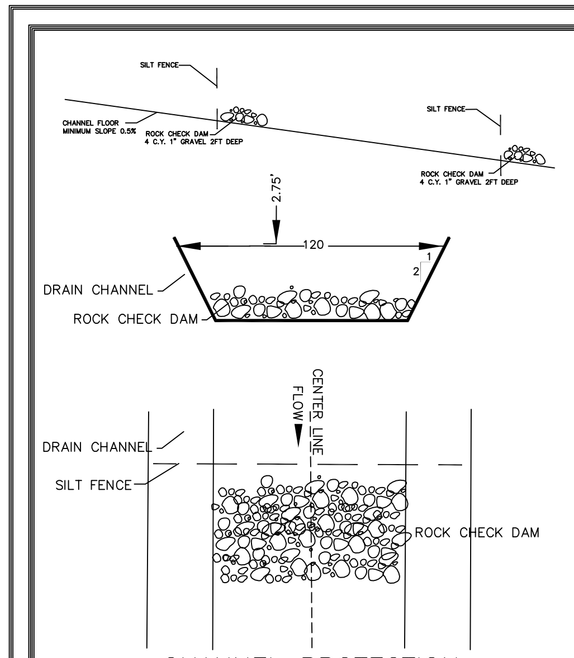

CHANNEL PROTECTION
NOT TO SCALE

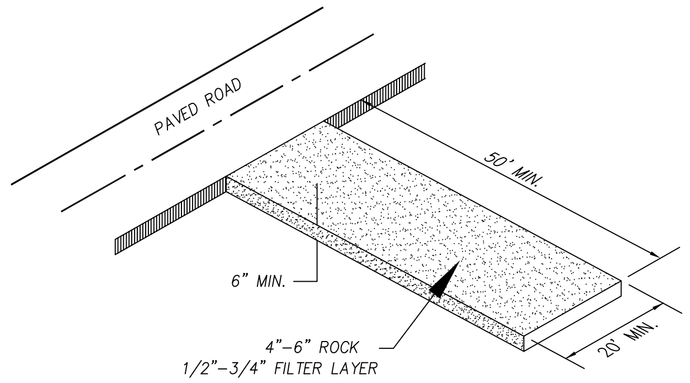

NOTES:
1-CLEAR AND GRUB AREA AND GRADE TO PROVIDE MAXIMUM SLOPE OF 2%
2-COMPACT SUBGRADE AND PLACE FILTER FABRIC IF DESIRED (RECOMMENDED FOR ENTRANCES TO REMAIN IN USE FOR MORE THEN 3 MONTHS)
3-PLACE COURSE AGGREGATE, 1 TO 2-½ INCHES SIZE, TO A MINIMUM DEPTH OF 8 INCHES.
4-DAILY INSPECTIONS ARE REQUIRED FOR LOSS OF GRAVEL OR SEDIMENT. SWEEPING OF ASPHALT ROADWAY MAY BE REQUIRED TO ELIMINATE GRAVEL FROM TRACKED TO SURFACE.

VEHICLE TRACKING DETAIL (D / D6.2)
NOT TO SCALE

NOTE:
TYPICALLY STRAW BALES ARE NOT RECOMMENDED FOR INLET PROTECTION BARRIERS.

PLACE CURB TYPE SEDIMENT BARRIERS ON GENTLY SLOPING STREET SEGMENTS, WHERE WATER CAN POND AND ALLOW SEDIMENT TO SEPARATE FROM RUNOFF.

SANDBAGS OF EITHER BURLAP OR WOVEN 'GEOTEXTILE' FABRIC TO BE USED TO WEIGH DOWN WATTLE IN AREAS WHERE THE WATER FLOW MAY MOVE THE WATTLE.

INSPECT BARRIERS AND REMOVE SEDIMENT AFTER EACH STORM EVENT. SEDIMENT AND GRAVEL MUST BE REMOVED FROM THE TRAVELED WAY IMMEDIATELY.

GUTTER PROTECTION SETUP

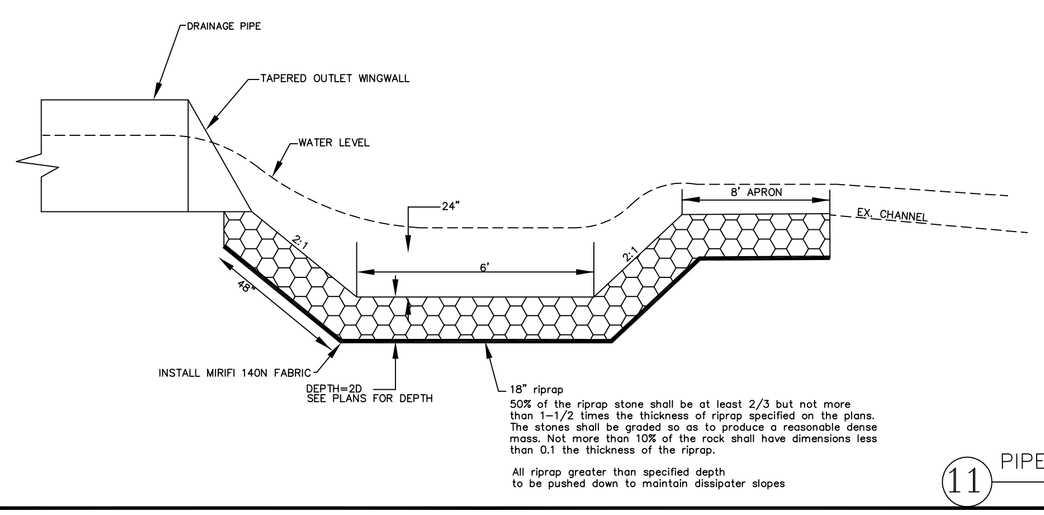

11 PIPE OUTLET FOR DRAINAGE CHANNEL DETAIL

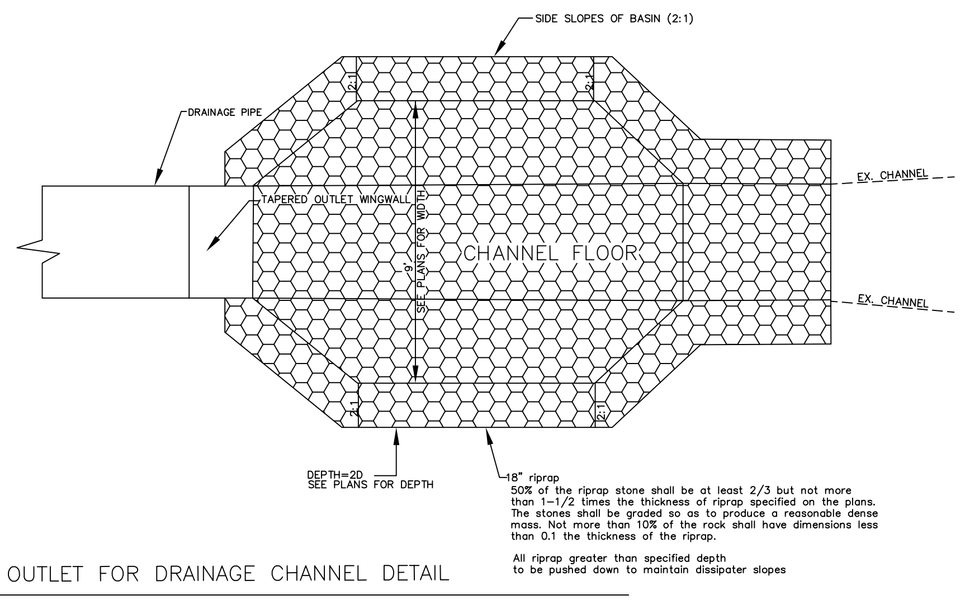

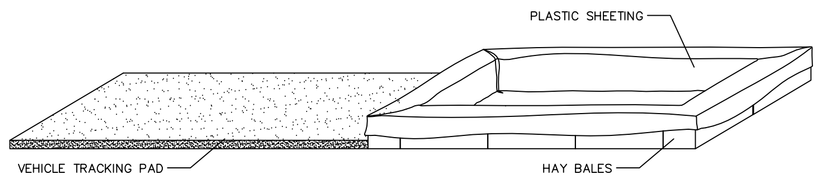

CONCRETE WASHOUT PIT
OPTION 1

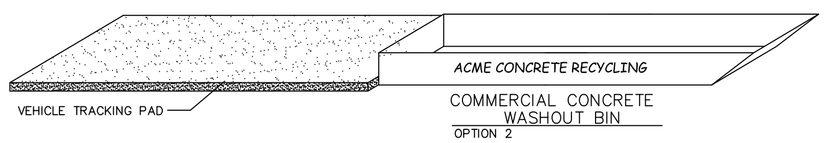

COMMERCIAL CONCRETE WASHOUT BIN
OPTION 2

BMP
1-AVOID MIXING EXCESS AMOUNTS OF FRESH CONCRETE OR CEMENT ON SITE.
2-PERFORM CONCRETE TRUCK WASHOUT OFF SITE OR IN DESIGNATED AREA
3-DO NOT WASHOUT CONCRETE TRUCKS INTO STORM DRAIN, OPEN DITCHES, STREETS OR STREAMS
4-LOCATE ONSITE WASHOUT AREA MORE THEN 50 FT AWAY FROM NEAREST STORM INLET.
5-WASHOUT CONCRETE WASTE INTO WASHOUT PIT OR COMMERCIAL WASHOUT BIN ONLY.

USE OF CONCRETE WASHOUT
1-IT IS THE CONTRACTOR'S RESPONSIBILITY TO MAINTAIN THE CONCRETE WASHOUT AREA.
2-WASHOUT CONCRETE WASTE INTO PIT OR CONTAINER WHERE IT CAN SET AND LATER BE BROKEN UP AND DISPOSED OF PROPERLY
3-NO WASTE OR LITTER IS TO BE PERMITTED TO ACCUMULATE IN THE WASHOUT AREA. AREA SHOULD BE CLEAN AT THE END OF EACH WORK DAY.
4-INSTALL PROPER WASTE WATER PROTECTION AT ALL EFFECTED DOWNHILL STORM DRAINS AND INLETS
5-INSTALL A VEHICLE TRACKING PAD TO PROTECT THE STREETS FROM MUD AND OTHER DEBRIS FROM TRUCKS. MAKE SURE ALL TRUCKS ARE CLEAR OF MUD AND ROCK THAT CAN FALL FROM TRUCK WHILE TRAVELING ON STREETS.

CONCRETE WASHOUT AREA EXAMPLE
NOT TO SCALE

See Saratoga Springs specifications for further information.

NO.	DESCRIPTION	DATE	APP'D

ORIG. DATE: 1-1-12
SURVEY BY:
DRAWN BY: CPW
DESIGNED BY: CPW
CHECKED BY: CPW
SCALE: N/A

GATEWAY CONSULTING, inc
P.O. BOX 951005 SOUTH JORDAN, UT 84095
PH: (801) 694-5848 FAX: (801) 432-7050
paul@gatewayconsultingllc.com
CIVIL ENGINEERING • CONSULTING • LAND PLANNING
CONSTRUCTION MANAGEMENT

SAIL HOUSE
EROSION CONTROL
TYPICAL SECTIONS AND DETAILS
DRAWING TILE
PROJECT NUMBER
9-20-14

SARATOGA CITY

PRELIMINARY NOT FOR CONSTRUCTION

SHEET NO. ER-2

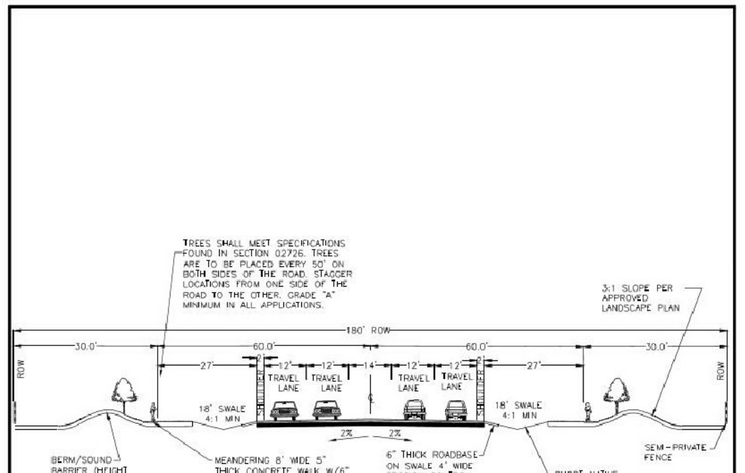

NOTES:

1. MAXIMUM DIFFERENCE IN ELEVATION BETWEEN CURB ON OPPOSITE SIDES OF STREET SHALL NOT EXCEED 1'-0"
2. PAVEMENT DESIGN SHALL BE AS RECOMMENDED BY A SOILS REPORT AND A GEOTECHNICAL ENGINEER, AND AS APPROVED BY CITY ENGINEER.
3. ARTERIAL ROADWAYS SHALL CONFORM TO THE CROSS-SECTION DRAWING ABOVE WHEN EXISTING ROADWAY IS 3 LANES OR LESS.
4. PROVIDE A MINIMUM 6" THICKNESS OF 3/4" OR 1" CRUSHED GRAVEL BASE COURSE UNDER SIDEWALKS, DRIVEWAY APPROACHES, AND CURB & GUTTER.
5. INSTALL TYPE 2 SLURRY SEAL.
6. HOUSES ARE NOT PERMITTED TO FRONT ON THESE STREETS.
7. ALL COMMERCIAL OR INDUSTRIAL DRIVEWAY ARE TO BE MINIMIZED.

DESIGN CRITERIA

DESIGN SPEED: 55 M.P.H.

MIN CENTERLINE RADIUS: 1190' MIN. UNLESS APPROVED OTHERWISE BY CITY ENGINEER.

VERTICAL CURVE REQUIREMENTS: SAG K VALUE = 115
CREST K VALUE = 114

CBR = 3 AS PER GEOTECH REPORT
ASPHALT = 6"
ROAD BASE = 6"
BORROW = 12"

INTERIM 180' RIGHT-OF-WAY ARTERIAL STANDARD
NOT TO SCALE

STANDARD DETAILS | STREET STANDARDS | **ST-13**

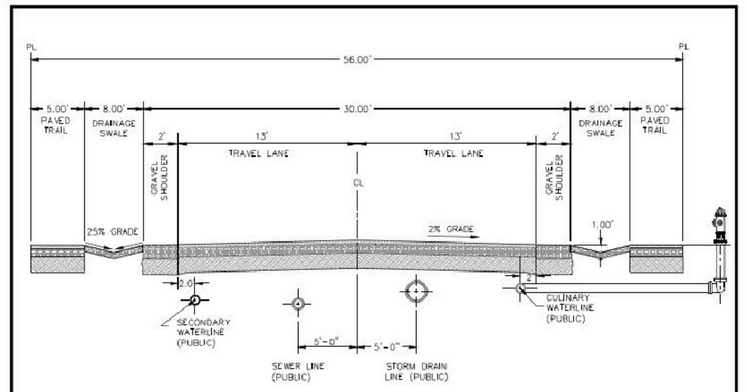

NOTES:

1. THIS ROW CROSS SECTION SHALL BE PERMITTED FOR PRIVATE ROAD CROSS SECTIONS IN THE FOLLOWING ZONES: A, RA-5, R-1, AND RR.
2. MAXIMUM DIFFERENCE IN ELEVATION BETWEEN SWALE ON OPPOSITE SIDES OF STREET SHALL NOT EXCEED 1'-0"
3. PAVEMENT DESIGN SHALL BE BASED ON A SOILS REPORT AND AS PER CITY STANDARDS.
4. INSTALL TYPE 2 SLURRY SEAL ON ALL HMA UPON COMPLETION OF PAVING AND PRIOR TO ACCEPTANCE OF ROADS.
5. HOUSES MAY FRONT ON THESE STREETS.
6. A FIVE FOOT ASPHALT OR CONCRETE TRAIL MUST BE PROVIDED BOTH SIDE OF THE STREET. TRAILS ARE NOT REQUIRED IN DEVELOPMENTS WITH 5 ACRE LOTS OR LARGER

DRIVE APPROACH SWALE CROSS SECTION

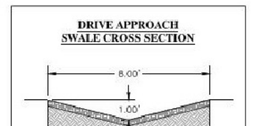

DRIVE APPROACHES SHALL HAVE BASE COURSE AND GRANULAR BORROW CONSISTENT WITH PAVEMENT DESIGN

DESIGN CRITERIA

DESIGN SPEED: 25 M.P.H.

MIN CENTERLINE RADIUS: 200' MIN.

VERTICAL CURVE REQUIREMENTS: SAG K VALUE = 37
CREST K VALUE = 20

CBR = 3 AS PER GEOTECH REPORT
ASPHALT = 3"
ROAD BASE = 8"
BORROW = 18"

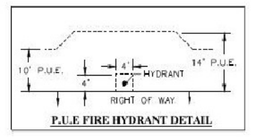

P.U.E FIRE HYDRANT DETAIL

PRIVATE ROADWAY RURAL 56' RIGHT-OF-WAY
NOT TO SCALE

STANDARD DETAILS | STREET STANDARDS | **ST-32**

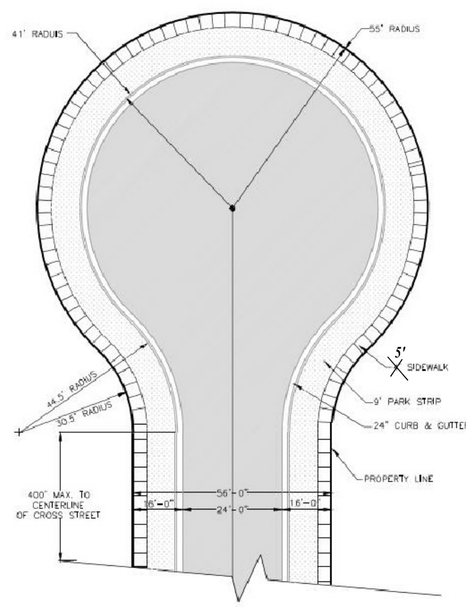

NOTE:
MAXIMUM 4.0% SLOPE IN CUL-DE-SAC IN ANY DIRECTION

STANDARD CUL-DE-SAC
NOT TO SCALE

STANDARD DETAILS | STREET STANDARDS | **ST-16**

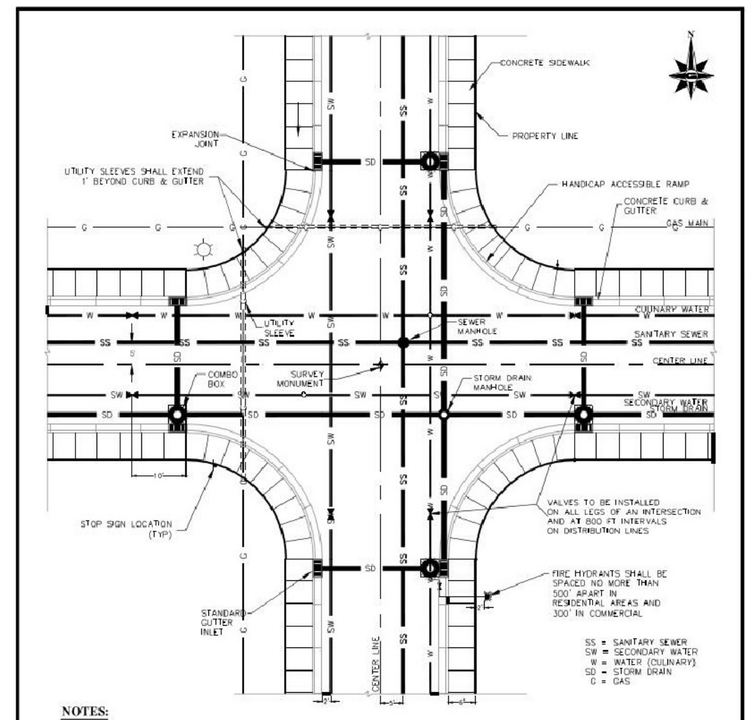

SS = SANITARY SEWER
SW = SECONDARY WATER
W = WATER (CULINARY)
SD = STORM DRAIN
G = GAS

NOTES:

1. LAND DRAINS ARE UNACCEPTABLE UNLESS EXPLICITLY ALLOWED BY CITY ENGINEER WHEN ALLOWED, PIPES SHALL NOT BE PERFORATED OR DESIGNED TO ACCEPT WATER WITHIN THE STREET RIGHT-OF-WAY.
2. CURB RADIUS ON LOCAL AND COLLECTOR RIGHT-OF-WAYS SHALL BE 25', ON MINOR ARTERIALS IT SHALL BE 35', AND ON MAJOR AND PRINCIPAL ARTERIALS SHALL BE 40' AS MEASURED FROM FACE OF CURB.
3. CHECK ALL CITY STANDARDS FOR UTILITY LOCATIONS.
4. STREET LIGHTS ARE TO BE PLACED AT INTERSECTIONS AND EVERY 300 FEET, ALTERNATING SIDES OF STREET.
5. WHERE INLET CONFLICTS WITH VALVE LOCATION, PLACE VALVE 10' BACK FROM POINT OF CURVATURE.

PRIVATE INTERSECTION & UTILITY DETAILS
NOT TO SCALE

STANDARD DETAILS | STREET STANDARDS | **ST-33**

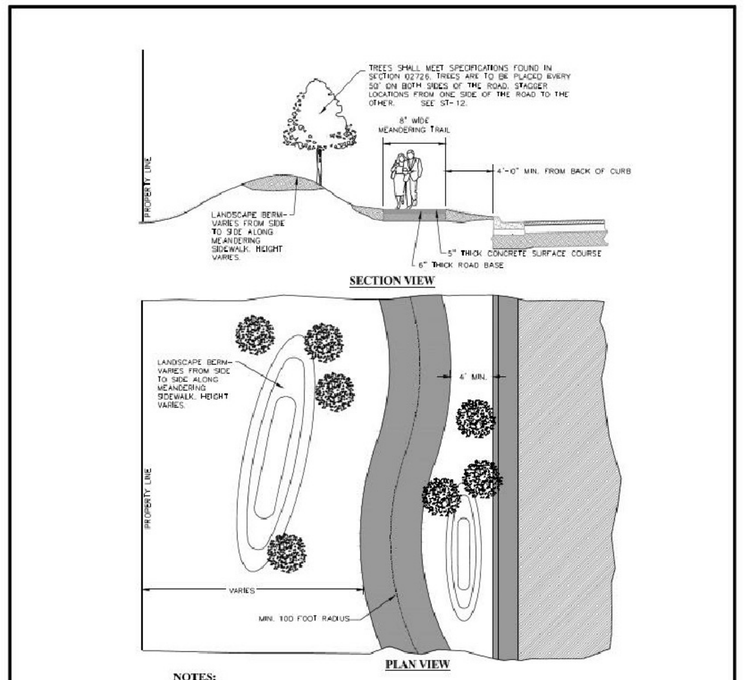

NOTES:

1. MEANDERING SIDEWALKS/TRAILS SHALL BE PERMITTED ON ARTERIAL STREETS ONLY, UNLESS APPROVED BY CITY ENGINEER.
2. CENTER LINE RADIUS OF MEANDERING SIDEWALKS/TRAILS SHALL BE APPROVED BY CITY ENGINEER.
3. CONSTRUCTION JOINTS @ 8' INTERVALS EXPANSION JOINTS @ 40' INTERVALS

8' WIDE TRAIL STANDARDS
NOT TO SCALE

STANDARD DETAILS | STREET STANDARDS | **ST-15A**

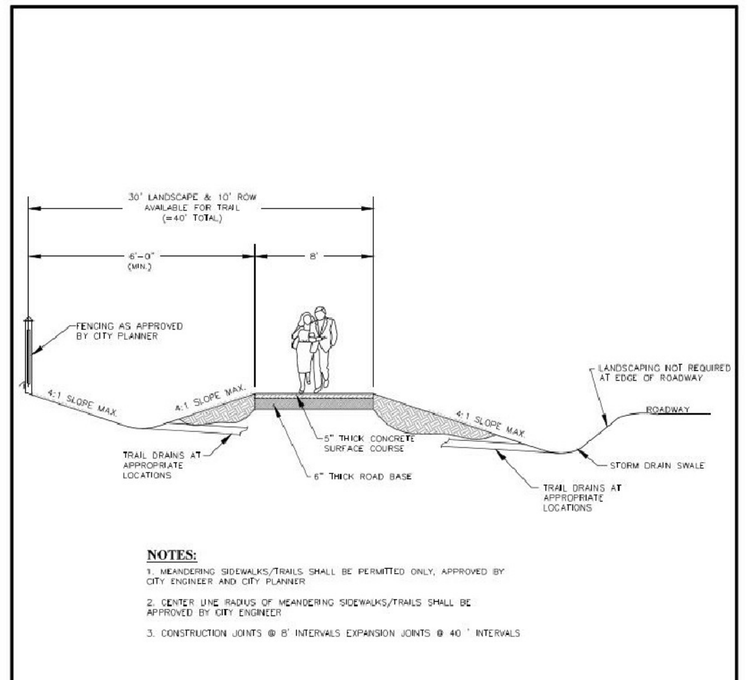

NOTES:

1. MEANDERING SIDEWALKS/TRAILS SHALL BE PERMITTED ONLY, APPROVED BY CITY ENGINEER AND CITY PLANNER
2. CENTER LINE RADIUS OF MEANDERING SIDEWALKS/TRAILS SHALL BE APPROVED BY CITY ENGINEER
3. CONSTRUCTION JOINTS @ 8' INTERVALS EXPANSION JOINTS @ 40 ' INTERVALS

8' WIDE TRAIL STANDARDS FOR INTERIM ROADS
NOT TO SCALE

STANDARD DETAILS | STREET STANDARDS | **ST-15B**

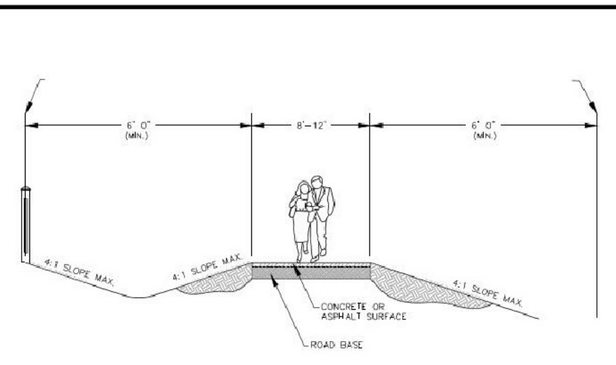

NOTES:

1. TRAILS ALONG ARTERIAL ROADWAYS, AND CANAL PARKWAYS SHALL BE 12' WIDE MEANDERING CONCRETE TRAILS.
2. TRAILS FOR LAKESIDE AND RIVERSIDE ACCESS MUST USE CONCRETE AND BE 12' WIDE.
3. IN RIPARIAN AREAS PROVIDE 8' CONCRETE TRAILS.
4. IN UPLAND AREAS PROVIDE 12' ASPHALT TRAILS.
5. FOR POWER LINE CORRIDORS, MOUNTAIN TRAILS, ATV TRAILS, AND EQUESTRIAN USE, PROVIDE 12' WIDE TRAILS WITH 8" OF ROAD BASE OR APPROVED SOFT-SURFACE MATERIAL.
6. FOR WILDERNESS TRAILS IN DEVELOPED AREAS PROVIDE 12' WIDE ASPHALT TRAILS.
6. FOR WILDERNESS TRAILS IN UNDEVELOPED AREAS PROVIDE 8'-10' WIDE TRAILS WITH 8" OF ROAD BASE OR APPROVED SOFT-SURFACE MATERIAL.
7. ALL TRAILS MUST BE ADA ACCESSIBLE AND PROVIDE MAINTENANCE ACCESS.
8. CENTER LINE RADIUS OF MEANDERING SIDEWALKS/TRAILS SHALL BE 100' MIN.
9. FOR CONCRETE TRAILS, PROVIDE CONSTRUCTION JOINTS @ 8' INTERVALS EXPANSION JOINTS @ 40 ' INTERVALS
10. CONCRETE TRAILS MUST HAVE 5" OF CONCRETE OVER 6" OF ROAD BASE.
11. ASPHALT TRAILS MUST HAVE 3" OF ASPHALT OVER 8" OF ROAD BASE.

TRAILS
NOT TO SCALE

STANDARD DETAILS | STREET STANDARDS | **ST-34**

TABLE 2

(Subgrade protection layer must be placed over the subgrade soils prior to placement of the pavement section. A design CBR must be determined by a geotechnical engineer. Based on this CBR value, the chart below provides how much Granular Borrow must be placed to adequately support the typical sections referenced in Table 3. If the in-situ CBRs of the subgrade are found to be softer than the design value, those values should be used.)

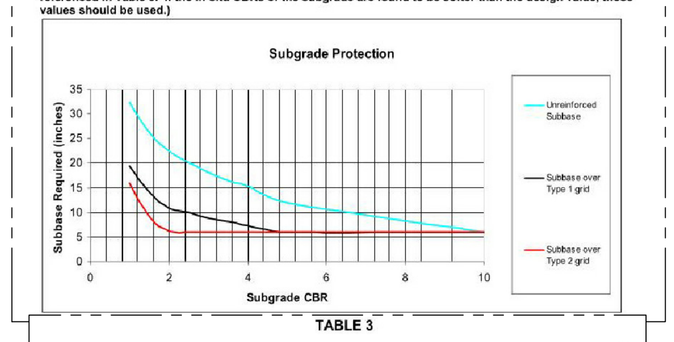

TABLE 3

Minimum Pavement Sections Based on Classification

(The following section(s) must be placed on top of the subgrade protection layer outlined in Table 2)

Residential Typical Section (Class I)		
3" AC (Asphalt Concrete) 8" UTBC (Untreated Base Course)		
Collector Typical Section Options (Class II)		
4" AC 8" UTBC	3" AC 8" UTBC Type 1 Geogrid	
Minor Arterial Typical Section Options (Class III)		
5" AC 8" UTBC	4" AC 8" UTBC Type 1 Geogrid	
Major & Principle Arterial Road Typical Section Options (Class IV)		
5" AC 6"UTBC 9" GB (Granular Borrow)	5" AC 8" UTBC Type 1 Geogrid	4" AC 6" UTBC Type 1 Geogrid 9" GB

(a) Road classification and structural design must be submitted by a licensed and qualified engineer for review and approval by the City Engineer.

(b) Traffic classifications I & II require a 1/2" mix HMA design

(c) Traffic classifications III & IV require a 3/4" mix HMA design

(d) If collapsible soils are identified in the initial soils investigation or during construction, the subgrade soil shall be over-excavated and re-compacted a minimum of 18-inches or deeper as directed by a licensed and qualified geotechnical engineer.

See Saratoga Springs specifications for further information.

NO.	DESCRIPTION	DATE	APP'D

ORIG. DATE: 1-1-12
SURVEY BY:
DRAWN BY : GPW
DESIGNED BY : GPW
CHECKED BY : GPW
SCALE : NOT TO SCALE

GATEWAY CONSULTING, inc
P.O. BOX 951005 SOUTH JORDAN, UT 84095
PH: (801) 694-5848 FAX: (801) 432-7050
paul@gatewayconsultingllc.com
CIVIL ENGINEERING • CONSULTING • LAND PLANNING
CONSTRUCTION MANAGEMENT

SAIL HOUSE

ROADWAY DETAILS

DRAWING FILE
PROJECT NUMBER
9-20-14

SARATOGA CITY

PRELIMINARY NOT FOR CONSTRUCTION

SHEET NO. D1

CULINARY WATERLINE TRENCH
NOT TO SCALE

NOTES:

1. WATER LINES 12 INCHES AND LARGER SHALL BE DUCTILE IRON CLASS-51.
2. WATER LINES 10 INCHES AND SMALLER SHALL BE PVC AWWA C900 CLASS 200.
3. VALVES 12 INCHES AND LARGER SHALL BE BUTTERFLY VALVES.
4. WHENEVER POSSIBLE "HOT TAP" CONNECTIONS REQUIRED. HOT TAP VALVE TO BE SUPPORTED DURING CONNECTION. CONTRACTOR TO NOTIFY CITY 24 HOURS IN ADVANCE OF MAKING CONNECTION.
5. PIPE ZONE SHALL BE BACKFILLED WITH BEDDING MATERIAL, OR OTHER ACCEPTABLE MATERIAL.
6. TRACING WIRE TO BE BROUGHT OUTSIDE OF BOTTOM PORTION OF VALVE BOX AND INSIDE TOP TO SURFACE.
7. FURNISH AND INSTALL POLY-WRAP ON DUCTILE IRON PIPE.
8. WHERE COLLAPSIBLE SOILS ARE ENCOUNTERED, FURNISH, PLACE AND COMPACT IMPORTED BACKFILL MATERIALS AS REQUIRED AND AS DIRECTED.

CONSTRUCTION NOTES:

1. THE CONTRACTOR SHALL BE RESPONSIBLE FOR MEETING ALL OF THE REQUIREMENTS ESTABLISHED FOR SAFE TRENCHING. (SEE OSHA AND UOSH REQUIREMENTS, LATEST EDITIONS).
2. MINIMUM COVER OVER TOP OF PIPE SHALL BE 48-INCHES BELOW THE FINISHED GRADE. THIS DEPTH MAY BE INCREASED AS REQUIRED TO MISS UNDERGROUND UTILITIES, STORM DRAINS, OR OTHER OBSTRUCTIONS, OR WHERE INDICATED ON THE DRAWINGS.
3. CONTRACTOR SHALL LOCATE ALL UNDERGROUND UTILITIES BEFORE LAYING PIPE WITHIN 200 FEET OF UTILITY CROSSINGS SHOWN ON THE DRAWINGS, OR AS "BLUE-STAKED."
4. SEWER MAINS, WATER MAINS, GAS MAINS AND OTHER UTILITIES ARE SHOWN ON THE PLANS IN A GENERAL SCHEMATIC WAY ACCORDING TO INFORMATION RECEIVED FROM OTHERS AND SOMETIMES FROM FIELD MEASUREMENTS. THE ACCURACY OR COMPLETENESS OF THE LOCATIONS SHOWN IS NOT GUARANTEED. THE CONTRACTOR SHALL DETERMINE THE ACTUAL LOCATION OF EXISTING SERVICE CONNECTIONS AND UTILITIES AND TAKE THE NECESSARY STEPS TO AVOID THEM.
5. ANY DAMAGE TO EXISTING UTILITIES SHALL BE REPAIRED AT THE CONTRACTOR'S SOLE EXPENSE.
6. THE CONTRACTOR MAY, AT HIS DISCRETION, USE SLOPING WALLS IN UNIMPROVED TERRAIN.

DATE: APRIL 2014 · DRAWING NAME: CW-1 · DRAWN BY: ETL · SARATOGA SPRINGS CITY · STANDARD DETAILS · CULINARY WATER · **CW-1**

CONCRETE THRUST BLOCKS
NOT TO SCALE

SAFE BEARING LOADS

SOIL TYPE	SAFE BEARING LOAD (lb./ft²)
SAND	1000
SAND & GRAVEL	1500
SAND & GRAVEL CEMENTED WITH CLAY	2000
SHALE	5000

SAFE BEARING LOAD FORMULA

THRUST BLOCK AREA AGAINST TRENCH WALL (SQUARE FEET) = THRUST ON FITTING / SAFE BEARING LOAD OF SOIL

NOTES:

1. REINFORCING BARS SHALL BE EPOXY COATED
2. RESIDENT PROJECT ENGINEER WILL CALCULATE QUANTITIES OF CONCRETE REQ'D AND SPECIFY PLACEMENT METHODS & REQUIREMENTS, WHICH SHALL BE APPROVED BY CITY ENGINEER
3. CONCRETE SHALL BE 4000 PSI MIN.
4. POUR CONCRETE AGAINST UNDISTURBED SOIL

THRUST ON FITTINGS

POUNDS @ 1 POUND PER SQUARE INCH OF WATER PRESSURE*

PIPE SIZE	TEES/ PLUGS	90° BENDS	45° BENDS	22.5° BENDS
4"	18.5	26.1	14.2	7.2
6"	38	53.7	29.1	14.7
8"	65.8	93	50.4	25.5
10"	107.5	152	82.4	41.7
12"	153.1	216.4	117.2	59.4
14"	215.5	304.7	164.9	84
16"	281.5	398.1	215.4	109.8
18"	356.3	503.8	272.6	139
20"	439.8	622	336.6	171.6
24"	633.3	895.6	484.7	247.1

*MULTIPLY THRUST BY MAXIMUM WATER PRESSURE

*PIPE SIZES LARGER THAN 24" SHALL BE THRUST BLOCKED AS PER ENGINEER RECOMMENDATION

THRUST BLOCK AREA AGAINST TRENCH WALL (SQUARE FEET)

ASSUMING SAND AND MAX PRESSURE OF 150 PSI SIZE MAY BE REDUCED WITH AN ENGINEERED SUBMITTAL AND AS APPROVED BY THE CITY ENGINEER

PIPE SIZE	TEES/ PLUGS	90° BENDS	45° BENDS	22.5° BENDS
4"	2.8	3.9	2.1	1.1
6"	5.7	8.1	4.4	2.2
8"	9.9	14.0	7.6	3.8
10"	16.1	22.8	12.4	6.3
12"	23.0	32.5	17.6	8.9
14"	32.3	45.7	24.7	12.6
16"	42.2	59.7	32.3	16.5
18"	53.4	75.6	40.9	20.9
20"	66.0	93.3	50.5	25.7
24"	95.0	134.3	72.7	37.1

DATE: APRIL 2014 · DRAWING NAME: CW-2 · DRAWN BY: ETL · SARATOGA SPRINGS CITY · STANDARD DETAILS · CULINARY WATER · **CW-2**

RESIDENTIAL METER CONNECTION 3/4" x 5/8" OR 1"
NOT TO SCALE

NOTES:

1. INSPECTION: METER BOX AND SERVICE LINE SHALL BE INSPECTED BY CITY PRIOR TO BACKFILLING.
2. BACKFILL: INSTALL BACKFILL IN LIFTS NOT EXCEEDING 8" AFTER COMPACTION. COMPACT EACH LIFT TO AN AVERAGE DRY DENSITY OF 95% WITH NO DENSITY TEST RESULT LESS THAN 92%.
3. CONTRACTOR TO SUPPLY ALL MATERIALS EXCLUDING METER
4. METER BOXES SHOULD BE PVC OR HDPE.
5. PIPE: INSTALL MINIMUM 3/4" CTS POLY PIPE (SDR-9) FROM MAIN TO METER AND FROM METER TO BUILDING. MINIMUM 1" POLYETHYLENE PIPE TO BE USED IN COMMERCIAL AREAS. INSTALL TRACING WIRE FROM MAIN LINE TO METER.
6. PLACEMENT: ALL METERS ARE TO BE INSTALLED IN THE PARK STRIP, MUST BE PLACED NEAR MIDPOINT OF THE LOT, AND MUST NOT BE LOCATED IN A DRIVEWAY OR IN A SIDEWALK.
7. METER YOKE TO BE MUELLER B-2470R-6A, OR ACCEPTABLE EQUAL
9. SERVICE SADDLES SHALL BE MUELLER BR-2-B SERIES, OR EQUAL
11. METER LID TO BE 1" ABOVE LINE GRADE OF WALK/CURB
12. STAINLESS STEEL LINER INSERTS WILL BE REQUIRED INSIDE OF TUBING AT COMPRESSION FITTINGS.
13. WATER SERVICES SHALL BE STUBBED TO A POINT APPROXIMATELY 1' BEYOND UTILITY EASEMENT (PUE).
14. 1" METER INSTALLATION TO BE SIMILAR USING 1" METER, PIPE, AND FITTINGS.

DATE: APRIL 2014 · DRAWING NAME: CW-5 · DRAWN BY: ETL · SARATOGA SPRINGS CITY · STANDARD DETAILS · CULINARY WATER · **CW-5**

FIRE HYDRANT CONNECTION
NOT TO SCALE

NOTES:

1. HYDRANT SHALL BE "TRAFFIC" TYPE WITH A REPLACEABLE BREAK-AWAY UNIT IMMEDIATELY ABOVE GROUND.
2. HYDRANT SHALL BE CENTERED IN A CONCRETE PAD.

DATE: APRIL 2014 · DRAWING NAME: CW-4 · DRAWN BY: ETL · SARATOGA SPRINGS CITY · STANDARD DETAILS · CULINARY WATER · **CW-4**

AIR VACUUM RELIEF VALVE
NOT TO SCALE

NOTE:

1. SIZE OF AIR-VACUUM RELIEF VALVE & PIPING SHALL BE AS DETERMINED BY PROJECT ENGINEER, AND APPROVED BY CITY ENGINEER.
2. LOCATE RISER IN LANDSCAPED AREA BEHIND CURB & GUTTER OR APPROX. 2 FT. FROM R/W LINE, AS DIRECTED BY CITY ENGINEER.
3. PROVIDE BOLLARDS OR OTHER PROTECTION FOR RISER IF AND AS DIRECTED BY CITY INSPECTOR.

DATE: APRIL 2014 · DRAWING NAME: CW-12 · DRAWN BY: ETL · SARATOGA SPRINGS CITY · STANDARD DETAILS · CULINARY WATER · **CW-12**

2 INCH BLOW-OFF VALVE
NOT TO SCALE

DATE: APRIL 2014 · DRAWING NAME: CW-13 · DRAWN BY: ETL · SARATOGA SPRINGS CITY · STANDARD DETAILS · CULINARY WATER · **CW-13**

PRESSURE REDUCING VALVE STATION
NOT TO SCALE

DATE: APRIL 2014 · DRAWING NAME: CW-10A · DRAWN BY: CJG · SARATOGA SPRINGS CITY · STANDARD DETAILS · CULINARY WATER · **CW-10A**

PRESSURE REDUCING VALVE STATION
NOT TO SCALE

CONCRETE VAULT NOTES:

PRECAST BOX AS SHOWN, SHALL MEET THE FOLLOWING CONDITIONS. (CONTRACTOR TO SUBMIT STRUCTURAL DRAWINGS FOR CAST IN PLACE VAULT.)

1. H-20 LOADING
2. NO HORIZONTAL JOINTS THROUGH THE PIPE OPENINGS.
3. FLOOR SHALL SLOPE 2% TOWARDS SUMP

GENERAL NOTES:

1. ALL WORK SHALL CONFORM TO SARATOGA SPRINGS CITY SPECIFICATIONS
2. SHOP DRAWINGS SHALL BE SUBMITTED TO SARATOGA SPRINGS CITY ENGINEER FOR APPROVAL PRIOR TO SHIPMENT
3. THE PRV ASSEMBLY DETAIL SHALL BE VERIFIED PER MANUFACTURE RECOMMENDATIONS
4. ALL VALVES SHALL HAVE 150 LB FLG'S, DUCTILE IRON BODY, BRONZE INTERNAL TRIM, EPOXY COATED, AND STAINLESS STEEL TUBES AND FITTINGS
5. PROVIDE DESIGN SUBMITTAL FOR WATERMAIN SIZES ABOVE 12"
6. PROVIDE BOLLARDS OR OTHER PROTECTION IF AND AS DIRECTED BY CITY INSPECTOR.
7. INSTALL AIR-VACUUM RELIEF VALVES WHERE REQUIRED AND AS DIRECTED.

PIPE SCHEDULE FOR 10" AND 12" WATERMAINS

#	DESCRIPTION
1.	12" X 10" MJ x FL REDUCER (NOT USED ON 10" MAINS)
2.	10" X 6" FL TEE
3.	6" FL GATE VALVE WITH HANDWHEEL
4.	10" FL GATE VALVE WITH HANDWHEEL
5.	6" CLA-VAL PRV
6.	10" CLA-VAL PRV
7.	6" 90 DEGREE FL ELBOW
8.	10" FL STRAINER
9.	4" LIQUID FILLED PRESSURE GAUGE UP TO 250 PSI W/ 3/4" BALL VALVE & HOSE BB (NON-THREADED)
10.	THRUST RESTRAINT W/ WELDED SEEP RING & THRUST BLOCK
11.	FL SPOOL
12.	POLYPROPYLENE M.H. STEPS @ 12" O.C.
13.	6" CLA-VAL PRESSURE RELIEF VALVE (MODEL 50G-01B, SEE NOTE 4) ON LOW PRESSURE SIDE
14.	PIPE SUPPORT
15.	FL STAND PIPE W/ FL GOOSE NECK POINTING DOWNWARD. THE OPEN END OF GOOSE NECK SHALL BE 18" ABOVE GRADE AND PROVIDED WITH A SCREEN (#14 MESH NON-CORRODIBLE).
16.	6" FL STRAINER
17.	12" x 12" RECESSED SUMP WITH REMOVABLE ALUM. GRATE
18.	MJ COUPLING OR MECHANIC COUPLING
19.	3/4" B 25008 MUELLER CORP ON BOTTOM OF SPOOL
20.	FL COUPLING ADAPTER
21.	FL X PE D.I. PIPE

PIPE SCHEDULE FOR 6" AND 8" WATERMAINS

#	DESCRIPTION
1.	8" X 6" MJ x FL REDUCER (NOT USED ON 6" MAINS)
2.	6" X 3" FL TEE
3.	3" FL GATE VALVE WITH HANDWHEEL
4.	6" FL GATE VALVE WITH HANDWHEEL
5.	3" CLA-VAL PRV
6.	6" CLA-VAL PRV
7.	3" 90 DEGREE FL ELBOW
8.	6" FL STRAINER
9.	4" LIQUID FILLED PRESSURE GAUGE UP TO 250 PSI W/ 3/4" BALL VALVE & HOSE BB (NON-THREADED)
10.	THRUST RESTRAINT W/ WELDED SEEP RING & THRUST BLOCK
11.	FL SPOOL
12.	POLYPROPYLENE M.H. STEPS @ 12" O.C.
13.	3" CLA-VAL PRESSURE RELIEF VALVE (MODEL 50G-01B, SEE NOTE 4) ON LOW PRESSURE SIDE
14.	PIPE SUPPORT
15.	FL STAND PIPE W/ FL GOOSE NECK POINTING DOWNWARD. THE OPEN END OF GOOSE NECK SHALL BE 18" ABOVE GRADE AND PROVIDED WITH A SCREEN (#14 MESH NON-CORRODIBLE).
16.	3" FL STRAINER
17.	12" x 12" RECESSED SUMP WITH REMOVABLE GRATE
18.	MJ OR MECHANICAL COUPLING
19.	3/4" B 25008 MUELLER CORP ON BOTTOM OF SPOOL
20.	FL COUPLING ADAPTER
21.	FL X PE D.I. PIPE

DATE: APRIL 2014 · DRAWING NAME: CW-10B · DRAWN BY: ETL · SARATOGA SPRINGS CITY · STANDARD DETAILS · CULINARY WATER · **CW-10B**

See Saratoga Springs specifications for further information.

NO.	DESCRIPTION	DATE	APP'D

ORIG. DATE: 1-1-12
SURVEY BY:
DRAWN BY : GPW
DESIGNED BY : GPW
CHECKED BY : GPW
SCALE : NOT TO SCALE

GATEWAY CONSULTING, inc
P.O. BOX 951005 SOUTH JORDAN, UT 84095
PH: (801) 694-5848 FAX: (801) 432-7050
paul@gatewayconsultingllc.com
CIVIL ENGINEERING • CONSULTING • LAND PLANNING
CONSTRUCTION MANAGEMENT

SAIL HOUSE

CULINARY WATER DETAILS

9-20-14 · PROJECT NUMBER · DRAWING FILE

SARATOGA CITY

PRELIMINARY NOT FOR CONSTRUCTION

SHEET NO. D2

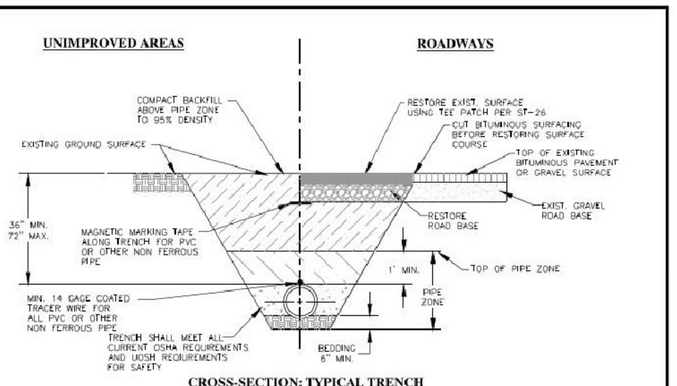

CROSS-SECTION: TYPICAL TRENCH

NOTES:

1. WATER LINES 12 INCHES AND LARGER SHALL BE DUCTILE IRON CLASS-51.
2. WATER LINES 10 INCHES AND SMALLER SHALL BE PVC AWWA C900 CLASS 200.
3. VALVES 12 INCHES AND LARGER SHALL BE BUTTERFLY VALVES.
4. WHENEVER POSSIBLE "HOT TAP" CONNECTIONS REQUIRED. HOT TAP VALVE TO BE SUPPORTED DURING CONNECTION. CONTRACTOR TO NOTIFY CITY 24 HOURS IN ADVANCE OF MAKING CONNECTION.
5. PIPE ZONE SHALL BE BACKFILLED WITH BEDDING MATERIAL OR OTHER ACCEPTABLE MATERIAL.
6. TRACING WIRE TO BE BROUGHT OUTSIDE OF BOTTOM PORTION OF VALVE BOX AND INSIDE TOP TO SURFACE.
7. FURNISH AND INSTALL POLY-WRAP ON DUCTILE IRON PIPE. POLY-WRAP MAY BE DELETED WHERE DIRECTED BY CITY ENGINEER.
8. WHERE COLLAPSIBLE SOILS ARE ENCOUNTERED, FURNISH, PLACE AND COMPACT IMPORTED BACKFILL MATERIALS AS REQUIRED AND AS DIRECTED.

CONSTRUCTION NOTES:

1. THE CONTRACTOR SHALL BE RESPONSIBLE FOR MEETING ALL OF THE REQUIREMENTS ESTABLISHED FOR SAFE TRENCHING. (SEE OSHA AND UIOH REQUIREMENTS, LATEST EDITIONS).
2. MINIMUM COVER OVER TOP OF PIPE SHALL BE 36-INCHES BELOW THE FINISHED GRADE. THIS DEPTH MAY BE INCREASED AS REQUIRED TO MISS UNDERGROUND UTILITIES, STORM DRAINS, OR OTHER OBSTRUCTIONS, OR WHERE INDICATED ON THE DRAWINGS.
3. CONTRACTOR SHALL LOCATE ALL UNDERGROUND UTILITIES BEFORE LAYING PIPE WITHIN 200 FEET OF UTILITY CROSSINGS SHOWN ON THE DRAWINGS, OR AS "BLUE-STAKED."
4. SEWER MAINS, WATER MAINS, GAS MAINS AND OTHER UTILITIES ARE SHOWN ON THE PLANS IN A GENERAL SCHEMATIC WAY ACCORDING TO INFORMATION RECEIVED FROM OTHERS AND SOMETIMES FROM FIELD MEASUREMENTS. THE ACCURACY OR COMPLETENESS OF THE LOCATIONS SHOWN IS NOT GUARANTEED. THE CONTRACTOR SHALL DETERMINE THE ACTUAL LOCATION OF EXISTING SERVICE CONNECTIONS AND UTILITIES AND TAKE THE NECESSARY STEPS TO AVOID THEM.
5. ANY DAMAGE TO EXISTING UTILITIES SHALL BE REPAIRED AT THE CONTRACTOR'S SOLE EXPENSE.
6. THE CONTRACTOR MAY, AT HIS DISCRETION, USE SLOPING WALLS IN UNIMPROVED TERRAIN.

TRENCH DETAIL
NOT TO SCALE

STANDARD DETAILS — PRESSURIZED IRR — **PI-1**

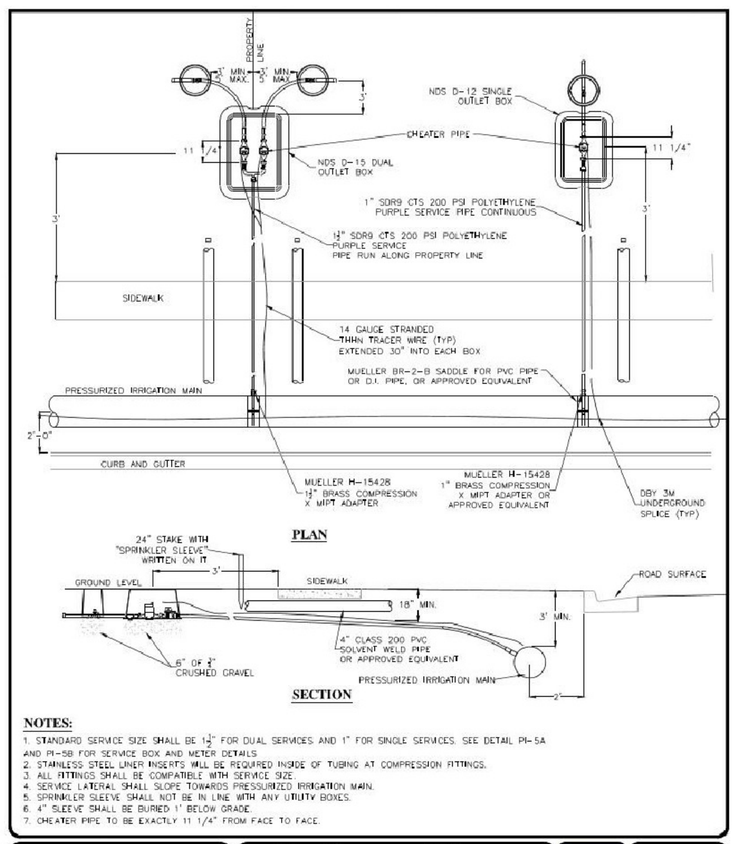

PLAN

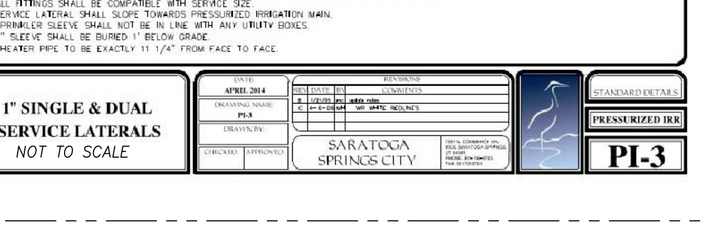

SECTION

NOTES:

1. STANDARD SERVICE SIZE SHALL BE 1½" FOR DUAL SERVICES AND 1" FOR SINGLE SERVICES. SEE DETAIL PI-5A AND PI-5B FOR SERVICE BOX AND METER DETAILS
2. STAINLESS STEEL LINER INSERTS WILL BE REQUIRED INSIDE OF TUBING AT COMPRESSION FITTINGS.
3. ALL FITTINGS SHALL BE COMPATIBLE WITH SERVICE SIZE.
4. SERVICE LATERAL SHALL SLOPE TOWARDS PRESSURIZED IRRIGATION MAIN.
5. SPRINKLER SLEEVE SHALL NOT BE IN LINE WITH ANY UTILITY BOXES.
6. 4" SLEEVE SHALL BE BURIED 1' BELOW GRADE
7. CHEATER PIPE TO BE EXACTLY 11 1/4" FROM FACE TO FACE.

1" SINGLE & DUAL SERVICE LATERALS
NOT TO SCALE

STANDARD DETAILS — PRESSURIZED IRR — **PI-3**

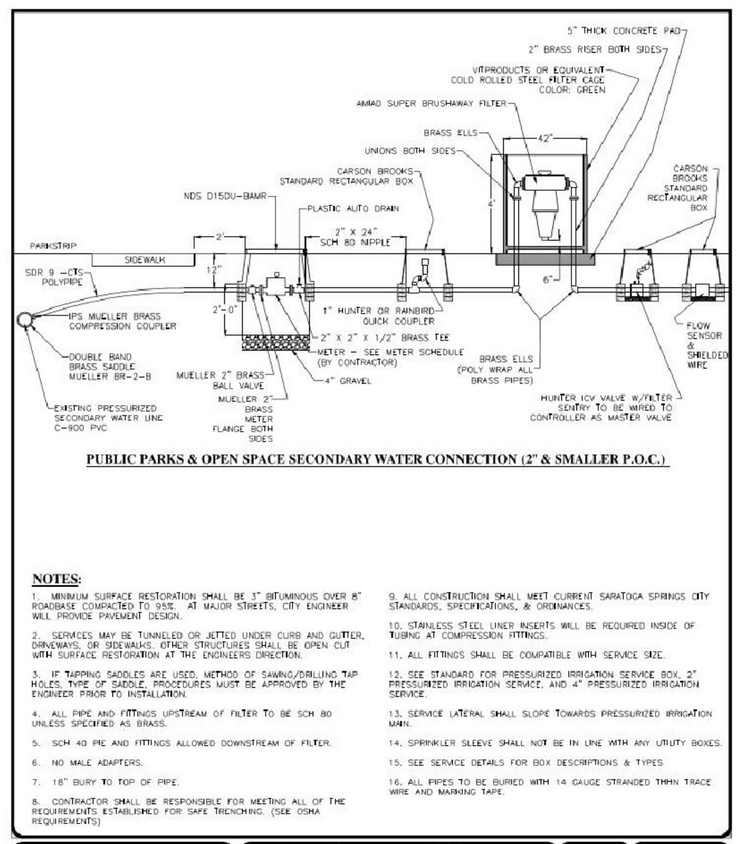

PUBLIC PARKS & OPEN SPACE SECONDARY WATER CONNECTION (2" & SMALLER P.O.C.)

NOTES:

1. MINIMUM SURFACE RESTORATION SHALL BE 3" BITUMINOUS OVER 8" ROADBASE COMPACTED TO 95%, AT MAJOR STREETS. CITY ENGINEER WILL PROVIDE PAVEMENT DESIGN.
2. SERVICES MAY BE TUNNELED OR JETTED UNDER CURB AND GUTTER, DRIVEWAYS, OR SIDEWALKS. OTHER STRUCTURES SHALL BE OPEN CUT WITH SURFACE RESTORATION AT THE ENGINEER'S DIRECTION.
3. IF TAPPING SADDLES ARE USED, METHOD OF SAWING/DRILLING TAP HOLES, TYPE OF SADDLE, PROCEDURES MUST BE APPROVED BY THE ENGINEER PRIOR TO INSTALLATION.
4. ALL PIPE AND FITTINGS UPSTREAM OF FILTER TO BE SCH 80 UNLESS SPECIFIED AS BRASS.
5. SCH 40 PIE AND FITTINGS ALLOWED DOWNSTREAM OF FILTER.
6. NO MALE ADAPTERS.
7. 18" BURY TO TOP OF PIPE.
8. CONTRACTOR SHALL BE RESPONSIBLE FOR MEETING ALL OF THE REQUIREMENTS ESTABLISHED FOR SAFE TRENCHING. (SEE OSHA REQUIREMENTS)
9. ALL CONSTRUCTION SHALL MEET CURRENT SARATOGA SPRINGS CITY STANDARDS, SPECIFICATIONS, & ORDINANCES.
10. STAINLESS STEEL LINER INSERTS WILL BE REQUIRED INSIDE OF TUBING AT COMPRESSION FITTINGS.
11. ALL FITTINGS SHALL BE COMPATIBLE WITH SERVICE SIZE.
12. SEE STANDARD FOR PRESSURIZED IRRIGATION SERVICE BOX. 2" PRESSURIZED IRRIGATION SERVICE, AND 4" PRESSURIZED IRRIGATION SERVICE.
13. SERVICE LATERAL SHALL SLOPE TOWARDS PRESSURIZED IRRIGATION MAIN.
14. SPRINKLER SLEEVE SHALL NOT BE IN LINE WITH ANY UTILITY BOXES.
15. SEE SERVICE DETAILS FOR BOX DESCRIPTIONS & TYPES
16. ALL PIPES TO BE BURIED WITH 14 GAUGE STRANDED THWN TRACE WIRE AND MARKING TAPE.

CONNECTION FOR PUBLIC PARKS & OPEN SPACE
NOT TO SCALE

STANDARD DETAILS — PRESSURIZED IRR — **PI-4**

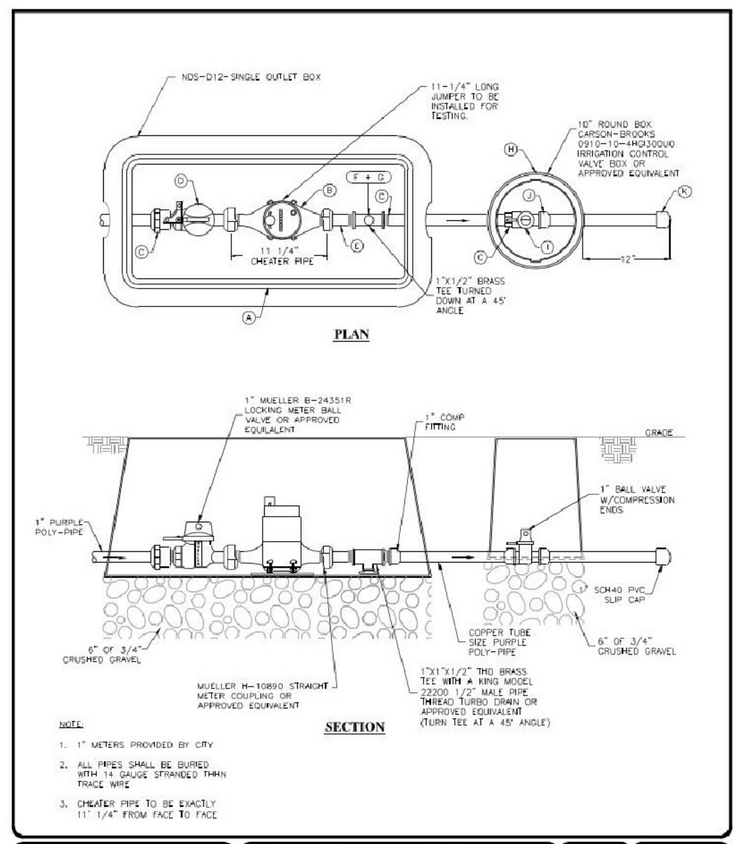

PLAN

SECTION

NOTE:

1. 1" METERS PROVIDED BY CITY
2. ALL PIPES SHALL BE BURIED WITH 14 GAUGE STRANDED THWN TRACE WIRE
3. CHEATER PIPE TO BE EXACTLY 11 1/4" FROM FACE TO FACE

1" SINGLE SERVICE LATERAL BOX
NOT TO SCALE

STANDARD DETAILS — PRESSURIZED IRR — **PI-5A**

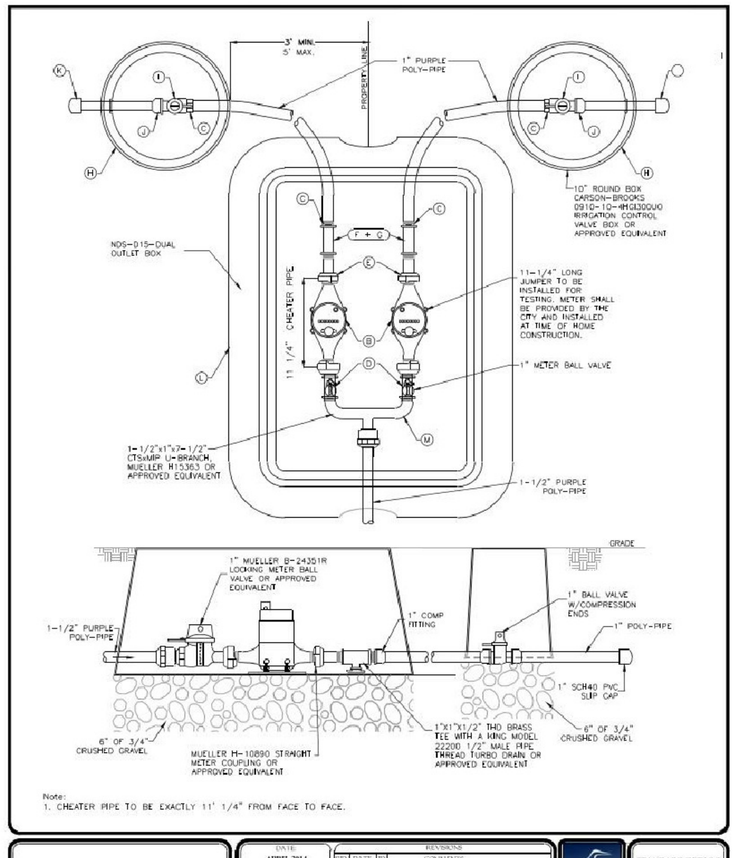

Note:
1. CHEATER PIPE TO BE EXACTLY 11 1/4" FROM FACE TO FACE.

1 1/2" DUAL SERVICE LATERAL BOX
NOT TO SCALE

STANDARD DETAILS — PRESSURIZED IRR — **PI-5B**

SCHEDULE OF PLUMBING MATERIAL FOR WATER METER BOXES

1" SINGLE SERVICE CONNECTION

ITEM	QUANTITY	DESCRIPTION
A	1ea	14"x19"x12" METER BOX W/ SINGLE OUTLET
B	1ea	1" METER (SUPPLIED AND INSTALLED BY CITY)
C	3ea	1" COUPLER CCT/MIPT H15428
D	1ea	1" STR BALL METER VALVE B24351R
E	1ea	1" STR METER COUPLER H10890
F	1ea	1"X1/2" BRASS TEE
G	1ea	1/2" MALE PIPE THREAD AUTO DRAIN
H	1ea	10" IRRIGATION VALVE BOX
I	1ea	1" BRASS BALL VALVE 600 WOG
J	1ea	1" MALE ADAPT SXM1PT SCH 40
K	1ea	1" SLIP CAP SHC 40

1 1/2" TO DUAL 1" SERVICE CONNECTION

ITEM	QUANTITY	DESCRIPTION
L	1ea	13"x20"x12" JUMBO METER BOX W/ DOUBLE OUTLET
B	2ea	1" METER (SUPPLIED AND INSTALLED BY CITY)
M	1ea	1.5"X1.5" CTSXMIP U-BRANCH H15363
D	2ea	1" STR BALL METER VALVE B24351R
E	2ea	1" STR METER COUPLER H10890
F	2ea	1"X1/2" BRASS TEE
G	2ea	1/2" MALE PIPE THREAD AUTO DRAIN
C	4ea	1" COUPLER CCT/MIPT H15428
I	2ea	1" BRASS BALL VALVE 600 WOG
H	2ea	10" IRRIGATION VALVE BOX
J	2ea	1" MALE ADAPT SXM1PT SCH 40
K	2ea	1" SLIP CAP SHC 40

PARTS LIST FOR SINGLE AND DUAL SERVICE LATERAL BOXES
NOT TO SCALE

STANDARD DETAILS — PRESSURIZED IRR — **PI-5C**

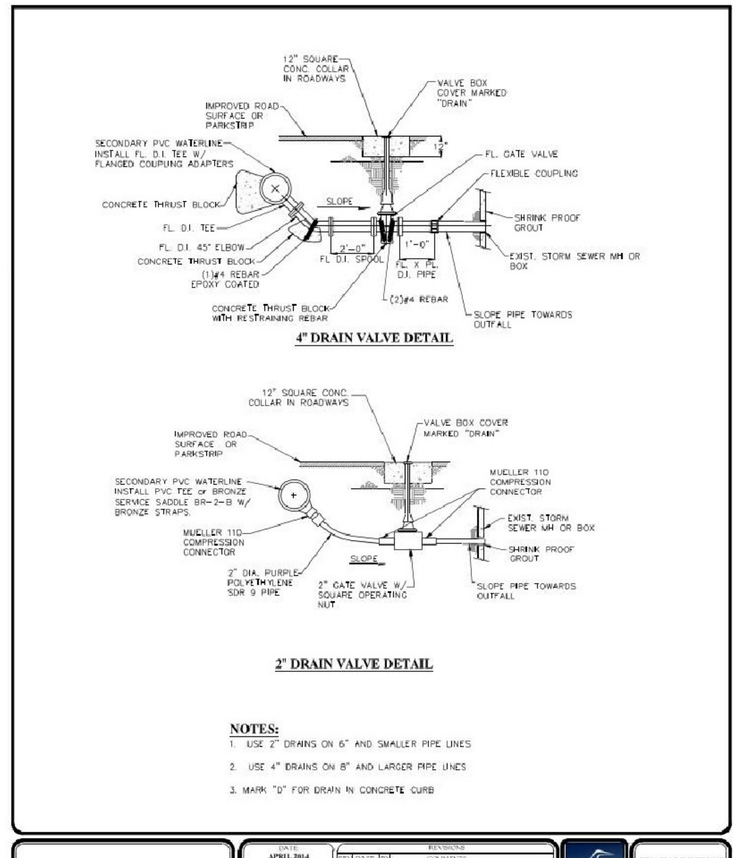

4" DRAIN VALVE DETAIL

2" DRAIN VALVE DETAIL

NOTES:

1. USE 2" DRAINS ON 6" AND SMALLER PIPE LINES
2. USE 4" DRAINS ON 8" AND LARGER PIPE LINES
3. MARK "D" FOR DRAIN IN CONCRETE CURB

2" & 4" DRAIN VALVES
NOT TO SCALE

STANDARD DETAILS — PRESSURIZED IRR — **PI-9**

PRESSURIZED IRRIGATION PRESSURE REDUCING VALVE STATION DETAIL

SEE SHEET D2 CULINARY WATER PRV DETAIL

See Saratoga Springs specifications for further information.

NO.	DESCRIPTION	DATE	APP'D

ORIG. DATE: 1-1-12
SURVEY BY:
DRAWN BY: GPW
DESIGNED BY: GPW
CHECKED BY: GPW
SCALE: NOT TO SCALE

GATEWAY CONSULTING, inc
P.O. BOX 95100 S. SOUTH JORDAN, UT 84095
PH: (801) 694-5848 FAX: (801) 432-7050
paul@gatewayconsultingllc.com
CIVIL ENGINEERING · CONSULTING · LAND PLANNING
CONSTRUCTION MANAGEMENT

SAIL HOUSE

PRESSURIZED IRRIGATION DETAILS

DRAWING FILE
PROJECT NUMBER
9-20-14

SARATOGA CITY

PRELIMINARY NOT FOR CONSTRUCTION

SHEET NO. D3

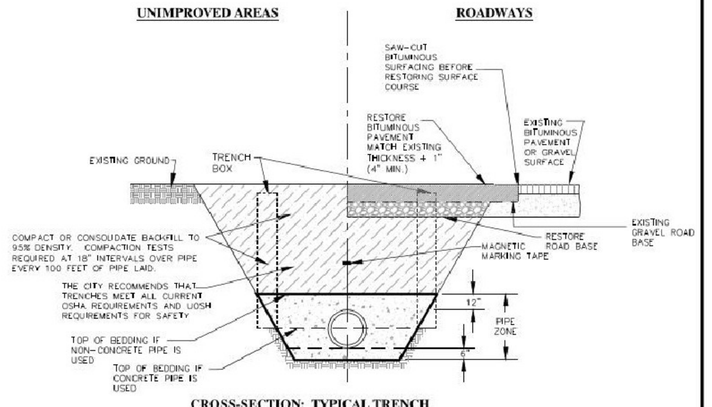

CROSS-SECTION: TYPICAL TRENCH

NOTES:

1. THE CITY RECOMMENDS CONTRACTOR MEET ALL OF THE REQUIREMENTS ESTABLISHED FOR SAFE TRENCHING. (SEE OSHA AND UOSM REQUIREMENTS, LATEST EDITIONS).

2. CONTRACTOR SHALL LOCATE ALL UNDERGROUND UTILITIES BEFORE LAYING PIPE WITHIN 50' OF SAID UTILITIES WHICH MAY BE EXPOSED, DAMAGED OR CROSSED AS SHOWN ON THE DRAWINGS OR AS "BLUE STAKED". THE CONTRACTOR SHALL MAKE ARRANGEMENTS WITH THE UTILITY COMPANY TO MOVE THE UTILITY IF NECESSARY OR OBTAIN PERMISSION FROM THE CITY ENGINEER TO MODIFY GRADE OF PIPELINE IN ORDER TO GO AROUND UTILITIES.

3. TESTING: ALL STORM DRAIN LINES TO BE "VIDEOED" AND NECESSARY REPAIRS MADE BEFORE ACCEPTANCE. A MANDREL OR BALL CAN BE USED TO VERIFY DEFORMATION OF A PIPE AS DETERMINED FROM THE VIDEO UNLESS SPECIFIED OTHERWISE.

4. ALL STORM DRAIN TO BE INSTALLED IN PUBLIC RIGHT-OF-WAY OR RECORDED DRAINAGE EASEMENT UNLESS OTHERWISE APPROVED BY THE CITY ENGINEER.

5. WHERE COLLAPSIBLE SOILS ARE ENCOUNTERED, FURNISH, PLACE AND COMPACT IMPORTED BACKFILL MATERIALS AS REQUIRED AND AS DIRECTED.

6. MIN. DEPTH OF COVER SHALL MEET MANUFACTURERS RECOMMENDATIONS.

7. IN ROCKY SUB-GRADES 18" OF CLEARANCE SHALL BE PROVIDED ON ALL SIDES OF PIPE.

8. INSTALL MAGNETIC DETECTOR TAPE 3' ABOVE PIPE IN TRENCH.

STORM DRAIN TRENCH
NOT TO SCALE

DATE: APRIL 2014 | DRAWING NAME: SD-1 | DRAWN BY: ETL | CHECKED: | APPROVED:
REVISIONS: NO. | DATE | BY | COMMENTS
SARATOGA SPRINGS CITY
STANDARD DETAILS | STORM DRAIN | **SD-1**

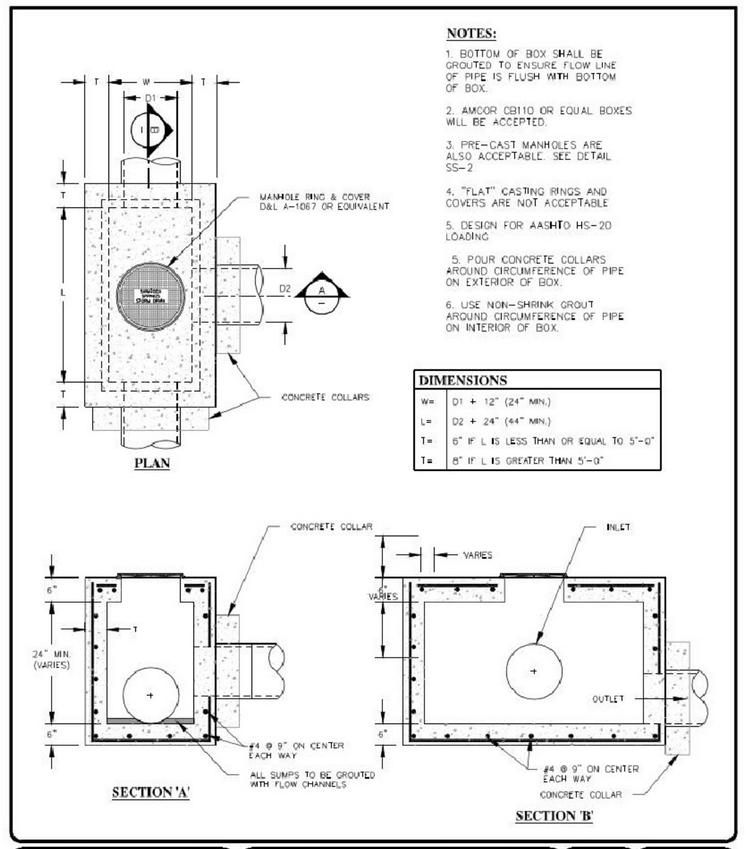

NOTES:

1. BOTTOM OF BOX SHALL BE GROUTED TO ENSURE FLOW LINE OF PIPE IS FLUSH WITH BOTTOM OF BOX.

2. AMCOR C3110 OR EQUAL BOXES WILL BE ACCEPTED.

3. PRE-CAST MANHOLES ARE ALSO ACCEPTABLE. SEE DETAIL SS-2.

4. "FLAT" CASTING RINGS AND COVERS ARE NOT ACCEPTABLE

5. DESIGN FOR AASHTO HS-20 LOADING

5. POUR CONCRETE COLLARS AROUND CIRCUMFERENCE OF PIPE ON EXTERIOR OF BOX.

6. USE NON-SHRINK GROUT AROUND CIRCUMFERENCE OF PIPE ON INTERIOR OF BOX.

DIMENSIONS	
W=	D1 + 12" (24" MIN.)
L=	D2 + 24" (44" MIN.)
T=	6" IF L IS LESS THAN OR EQUAL TO 5'-0"
T=	8" IF L IS GREATER THAN 5'-0"

CLEANOUT BOX
NOT TO SCALE

DATE: APRIL 2014 | DRAWING NAME: SD-3 | DRAWN BY: ETL | CHECKED: | APPROVED:
REVISIONS: NO. | DATE | BY | COMMENTS
SARATOGA SPRINGS CITY
STANDARD DETAILS | STORM DRAIN | **SD-3**

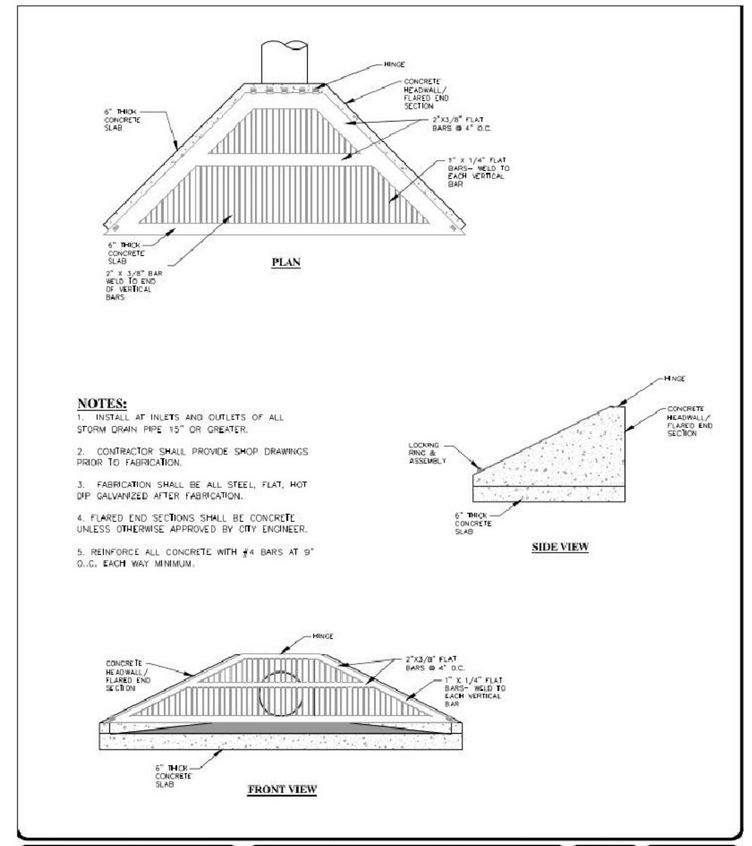

NOTES:

1. INSTALL AT INLETS AND OUTLETS OF ALL STORM DRAIN PIPE 15" OR GREATER.

2. CONTRACTOR SHALL PROVIDE SHOP DRAWINGS PRIOR TO FABRICATION.

3. FABRICATION SHALL BE ALL STEEL, FLAT, HOT DIP GALVANIZED AFTER FABRICATION.

4. FLARED END SECTIONS SHALL BE CONCRETE UNLESS OTHERWISE APPROVED BY CITY ENGINEER.

5. REINFORCE ALL CONCRETE WITH #4 BARS AT 9" O.C. EACH WAY MINIMUM.

INLET/OUTLET TRASH GRATES
NOT TO SCALE

DATE: APRIL 2014 | DRAWING NAME: SD-5 | DRAWN BY: ETL | CHECKED: | APPROVED:
REVISIONS: NO. | DATE | BY | COMMENTS
SARATOGA SPRINGS CITY
STANDARD DETAILS | STORM DRAIN | **SD-5**

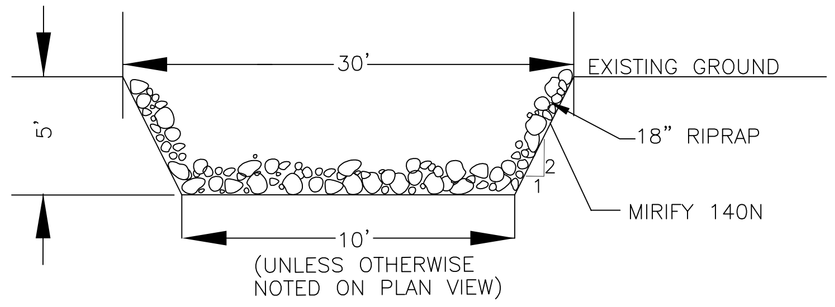

75' DRAINAGE CHANNEL OUTFALL TO LAKE
DETAIL X-SECTION #1

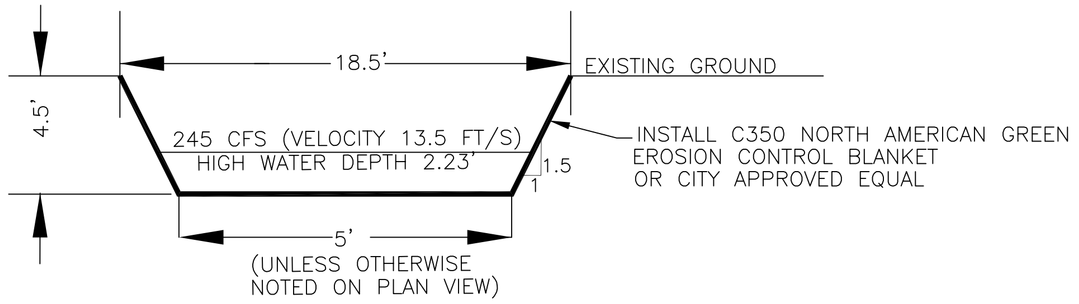

4' SOUTH PROPERTY BOUNDARY DRAINAGE DITCH
DETAIL X-SECTION #3
LOTS 25-27

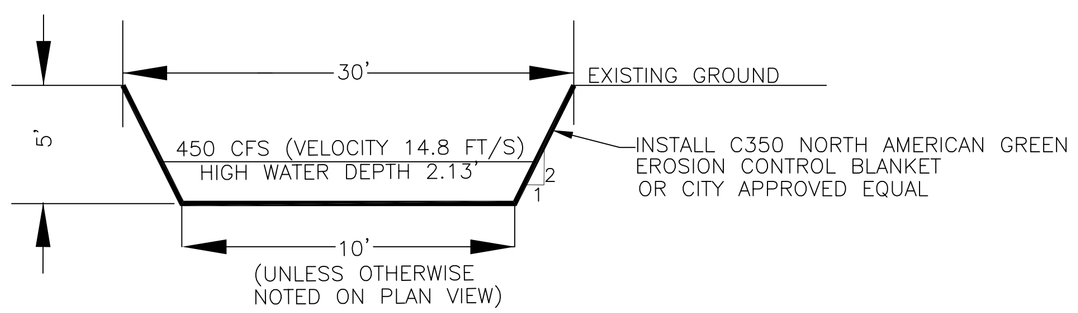

75' DRAINAGE CHANNEL OUTFALL TO LAKE
DETAIL X-SECTION #2

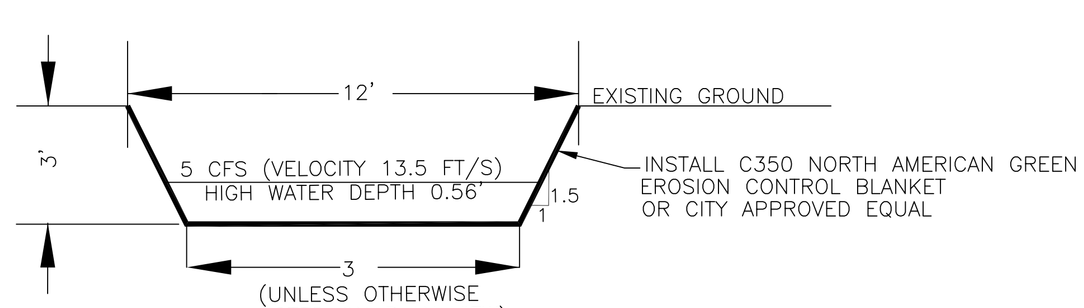

4' SOUTH PROPERTY BOUNDARY DRAINAGE DITCH
DETAIL X-SECTION #4
LOTS 20-22

See Saratoga Springs specifications for further information.

NO.	DESCRIPTION	DATE	APP'D

ORIG. DATE: 1-1-12
SURVEY BY:
DRAWN BY: CPW
DESIGNED BY: CPW
CHECKED BY: CPW
SCALE: NOT TO SCALE

GATEWAY CONSULTING, inc
P.O. BOX 951005 SOUTH JORDAN, UT 84095
PH: (801) 694-3648 FAX: (801) 432-7050
paul@gatewayconsultingllc.com
CIVIL ENGINEERING • CONSULTING • LAND PLANNING
CONSTRUCTION MANAGEMENT

SAIL HOUSE
STORM DRAINAGE DETAILS
DRAWING FILE
PROJECT NUMBER
9-20-14

SARATOGA CITY

PRELIMINARY NOT FOR CONSTRUCTION

SHEET NO. D4

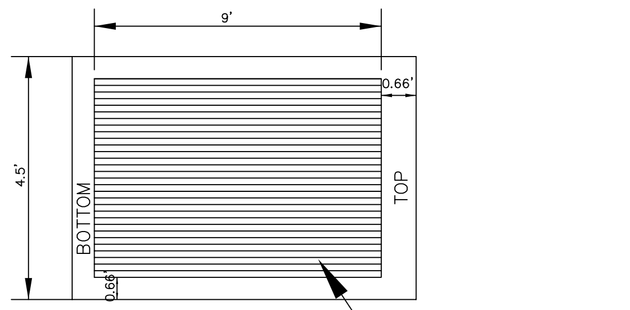

PLAN

STEEL
FRAME & GRATE

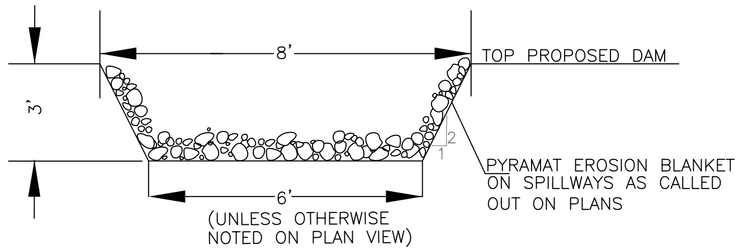

SPILLWAY CHANNEL

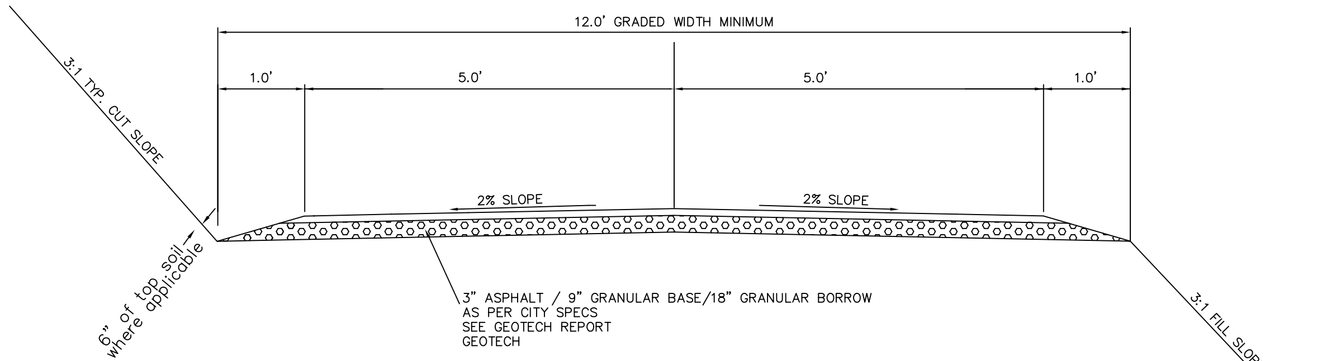

POND ACCESS ROAD CROSS SECTION

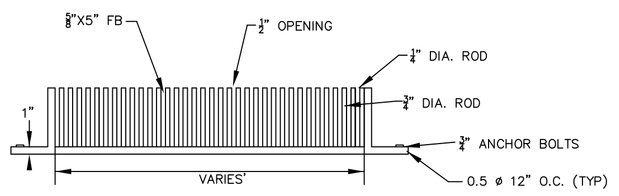

FRAME AND GRATE DETAIL

SEEPAGE COLLAR DETAIL

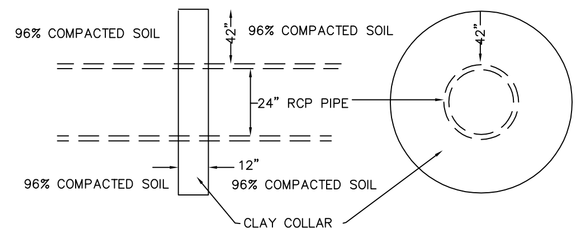

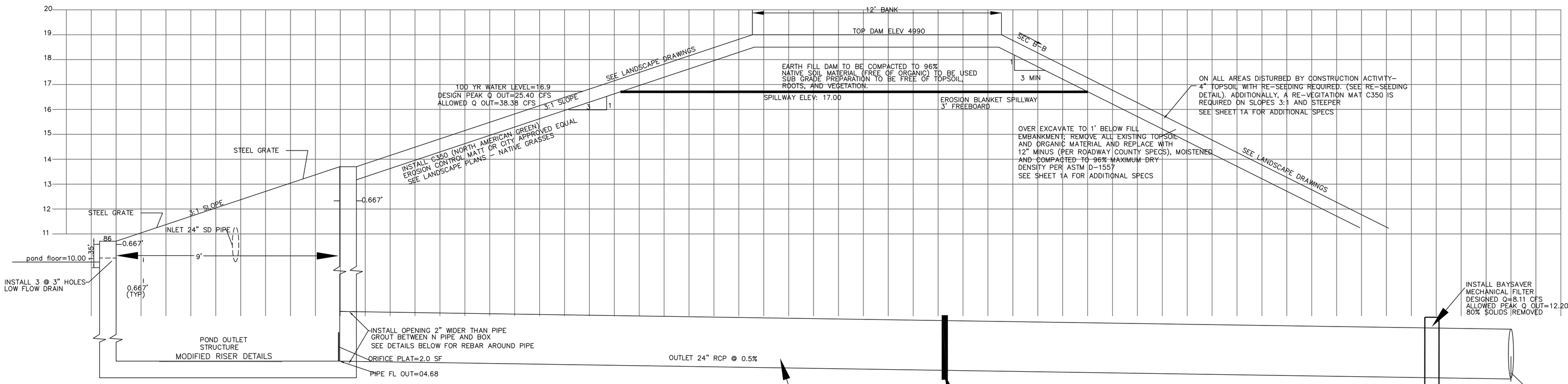

DETENTION POND OUTLET
DETAIL AND CROSS SECTION

A SECTION

ORIFICE OUTLET DETAIL

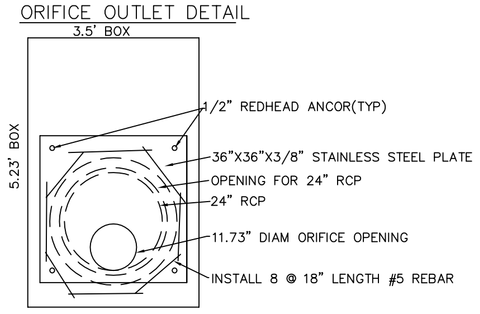

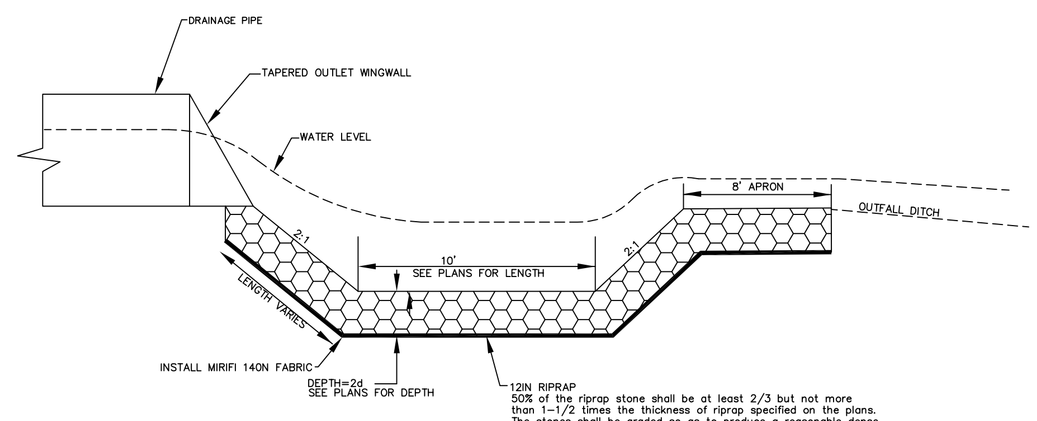

RIPRAP OUTLET DETAIL

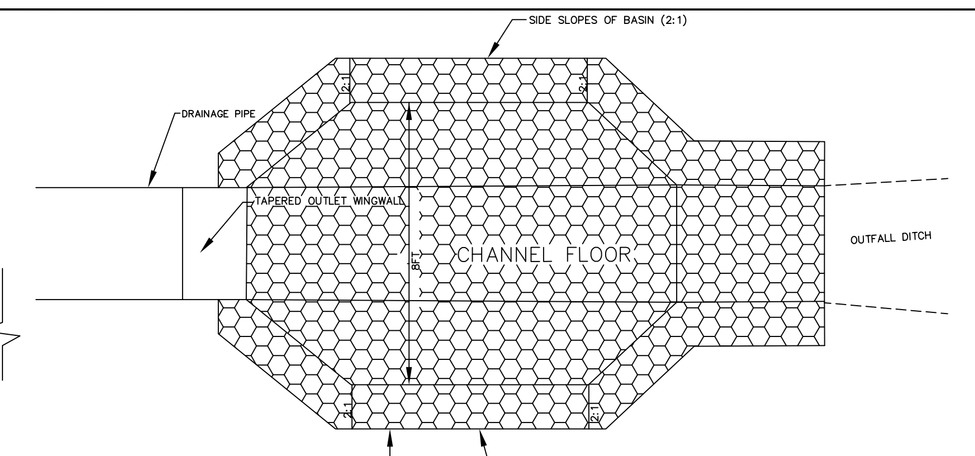

NO.	DESCRIPTION	DATE	APP'D

ORIG. DATE: 01-01-07
SURVEY BY: N/A
DRAWN BY: CPW
DESIGNED BY: CPW
CHECKED BY: CPW
SCALE: N/A

GATEWAY CONSULTING, inc.
P.O. BOX 951005 SOUTH JORDAN, UT 84095
PH: (801) 694-5848 FAX: (801) 432-7050

CIVIL ENGINEERING - CONSULTING - LAND PLANNING
CONSTRUCTION MANAGEMENT

SAIL HOUSE

POND DETAILS

DRAWING FILE

PROJECT NUMBER

9-20-14
PLOT DATE:

SARATOGA
CITY

SHEET NO. D5-A

DET POND 1A X SECT

PROFILE VIEW: ALIGNMENT – (----DET POND 1L----) – 4+50
SCALE: 10
DATUM: 4480.00

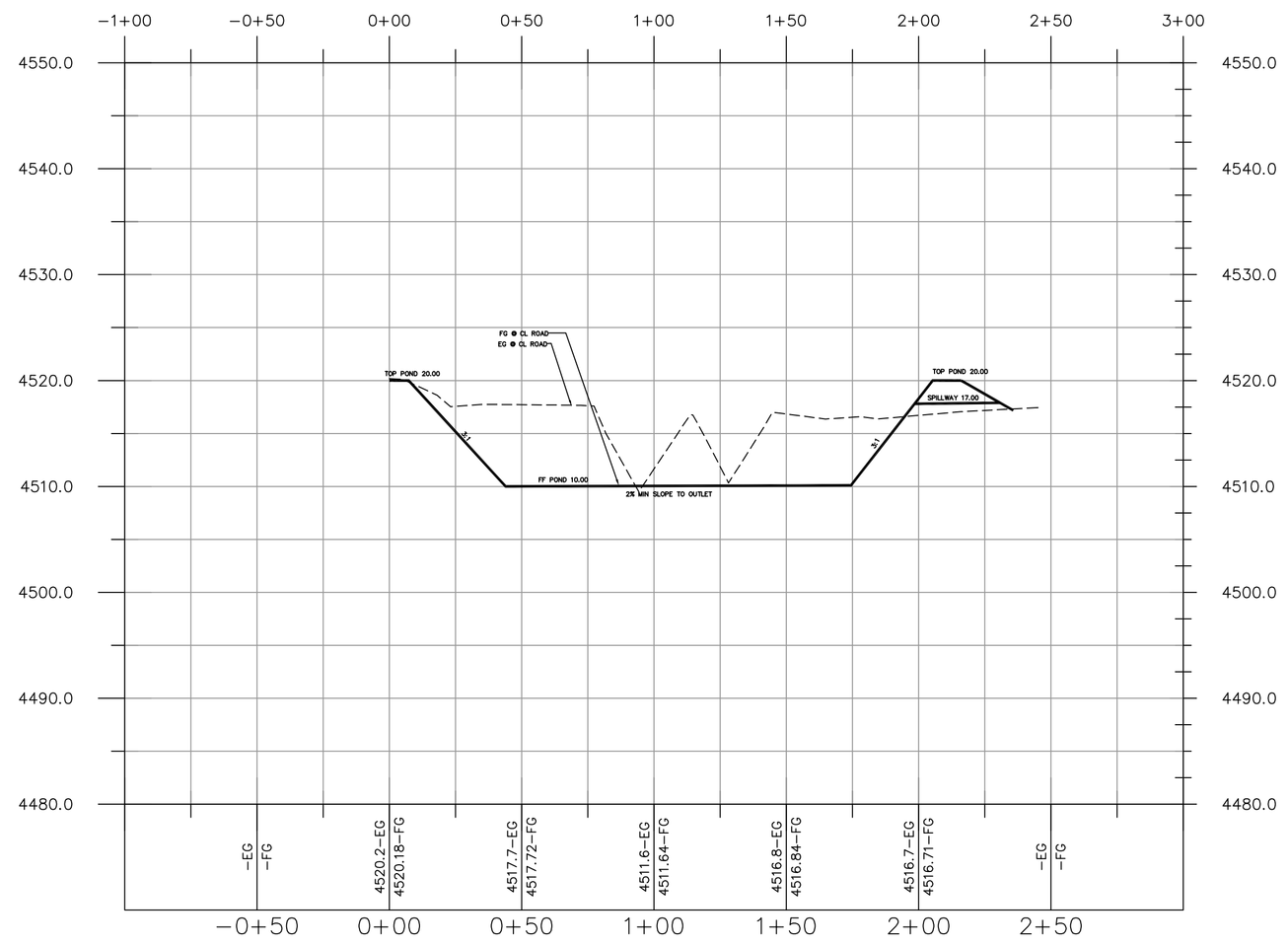

DET POND 1B X SECT

PROFILE VIEW: ALIGNMENT – (----DET POND 1B----) – 4+00
SCALE: 10
DATUM: 4470.00

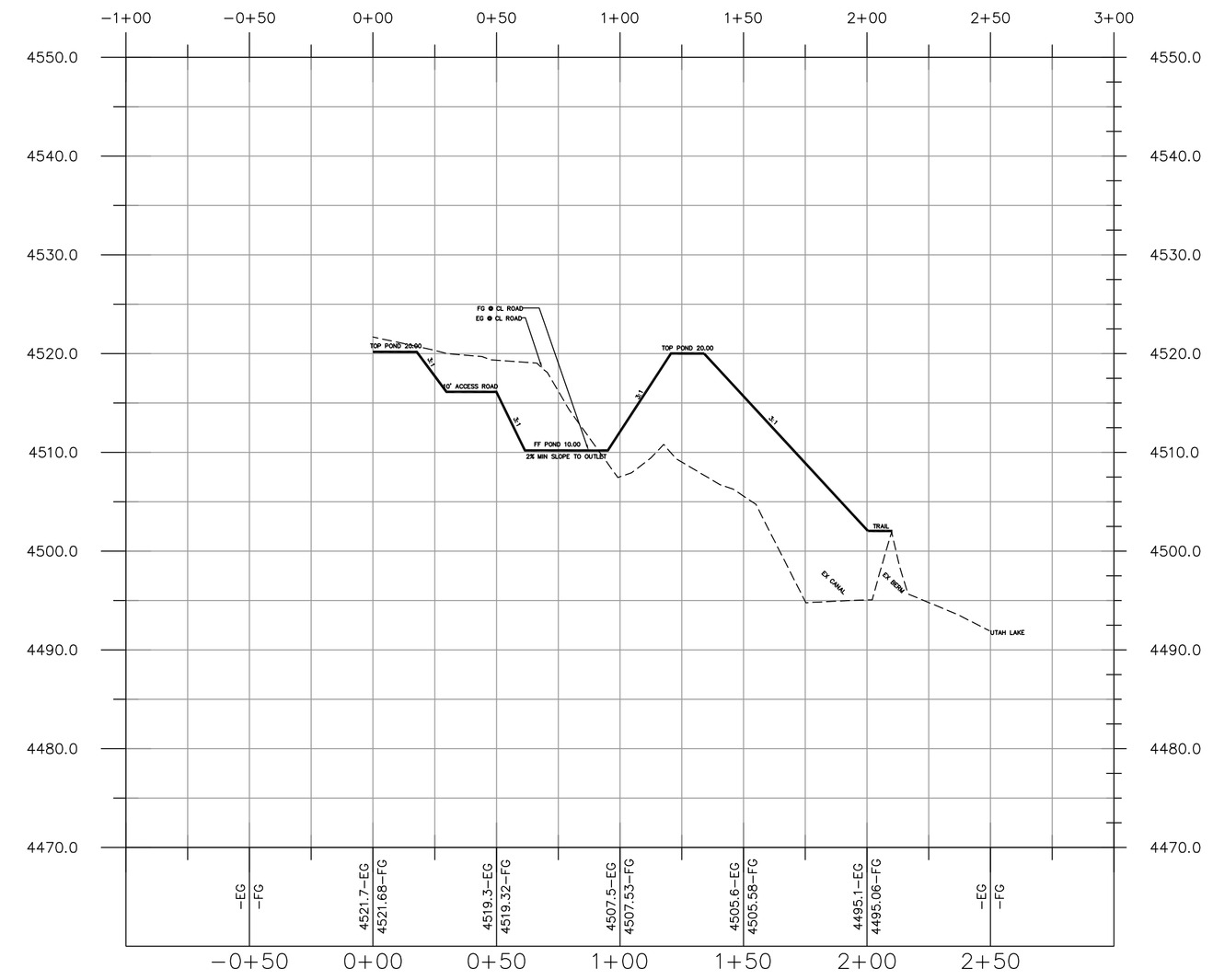

40 0 40 80
SCALE IN FEET
1"=40' (24"x36" SHEET ONLY)

NO.	DESCRIPTION	DATE	APP'D

ORIG. DATE: 1-1-12
SURVEY BY:
DRAWN BY: CPW
DESIGNED BY: CPW
CHECKED BY: CPW
SCALE: 1"=40'

GATEWAY CONSULTING, inc
P.O. BOX 951005 SOUTH JORDAN, UT 84095
PH: (801) 694-3548 FAX: (801) 432-7050
paul@gatewayconsultingllc.com
CIVIL ENGINEERING • CONSULTING • LAND PLANNING
CONSTRUCTION MANAGEMENT

SAIL HOUSE

POND DETAILS

DRAWING FILE
PROJECT NUMBER
8-1-14

SARATOGA CITY

PRELIMINARY
NOT FOR
CONSTRUCTION

SHEET NO. D5-B

SCALE & NORTH ARROW | A

NORTH

0 50 100 200

SCALE: 1" = 100'-0"

Arc Sitio Design, Inc
Landscape Architecture & Architectural Site Design

1058 East 2100 South
Salt Lake City, Utah 84106
office 801 . 487 . 4923
fax 801 . 466 . 3046
www.arcsitiodesign.com

consultant:

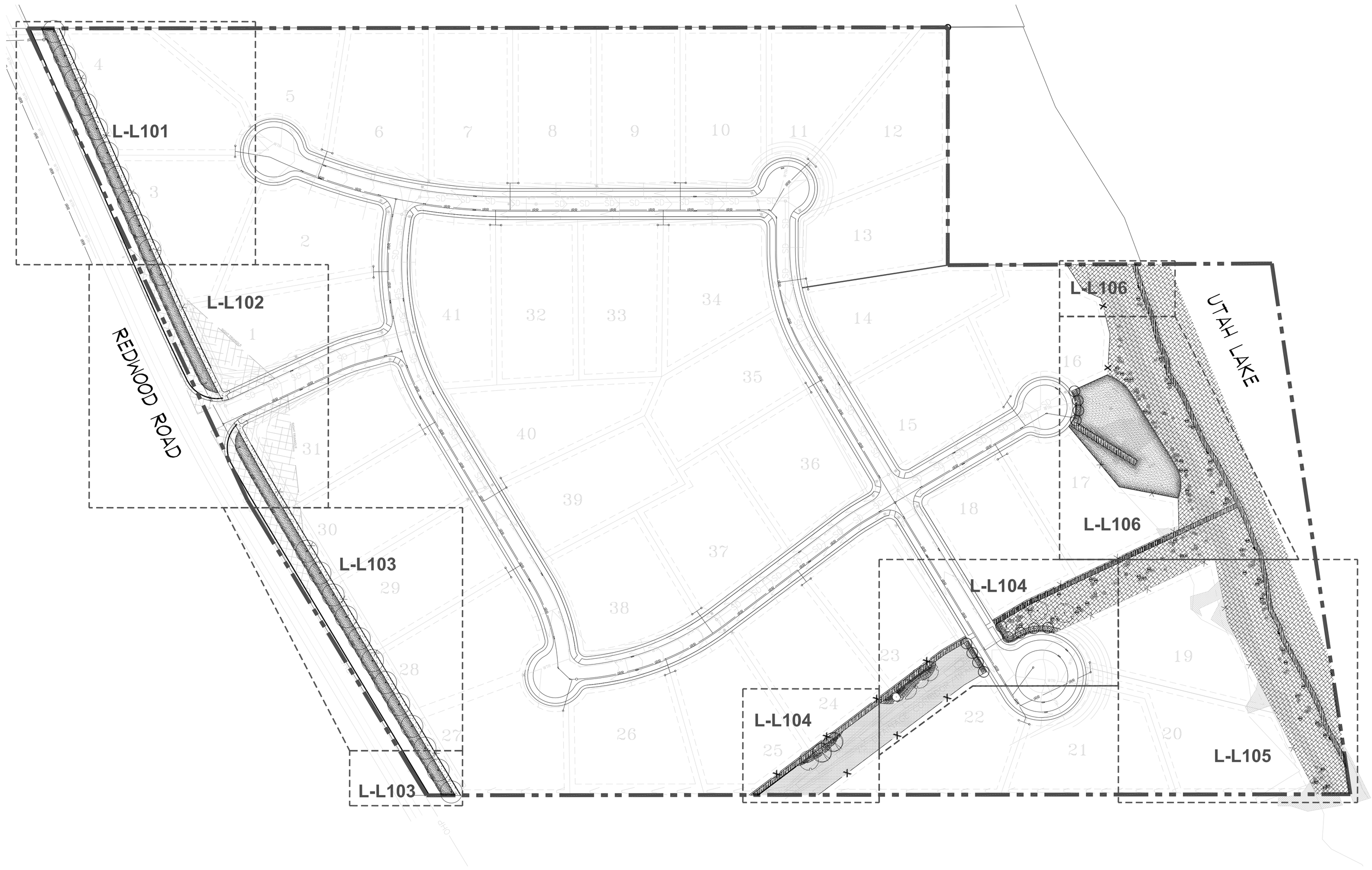

project

Sail House Development
Saratoga Springs, UT

date
SEPTEMBER 22, 2014

revisions

data
asd project no: 14027

title
OVERALL PLANTING PLAN

sheet
L-L100

File : E:\14027_Sail House\Cadd\Planting.dwg Sep 22, 2014 - 9:47am

PLANTING PLAN

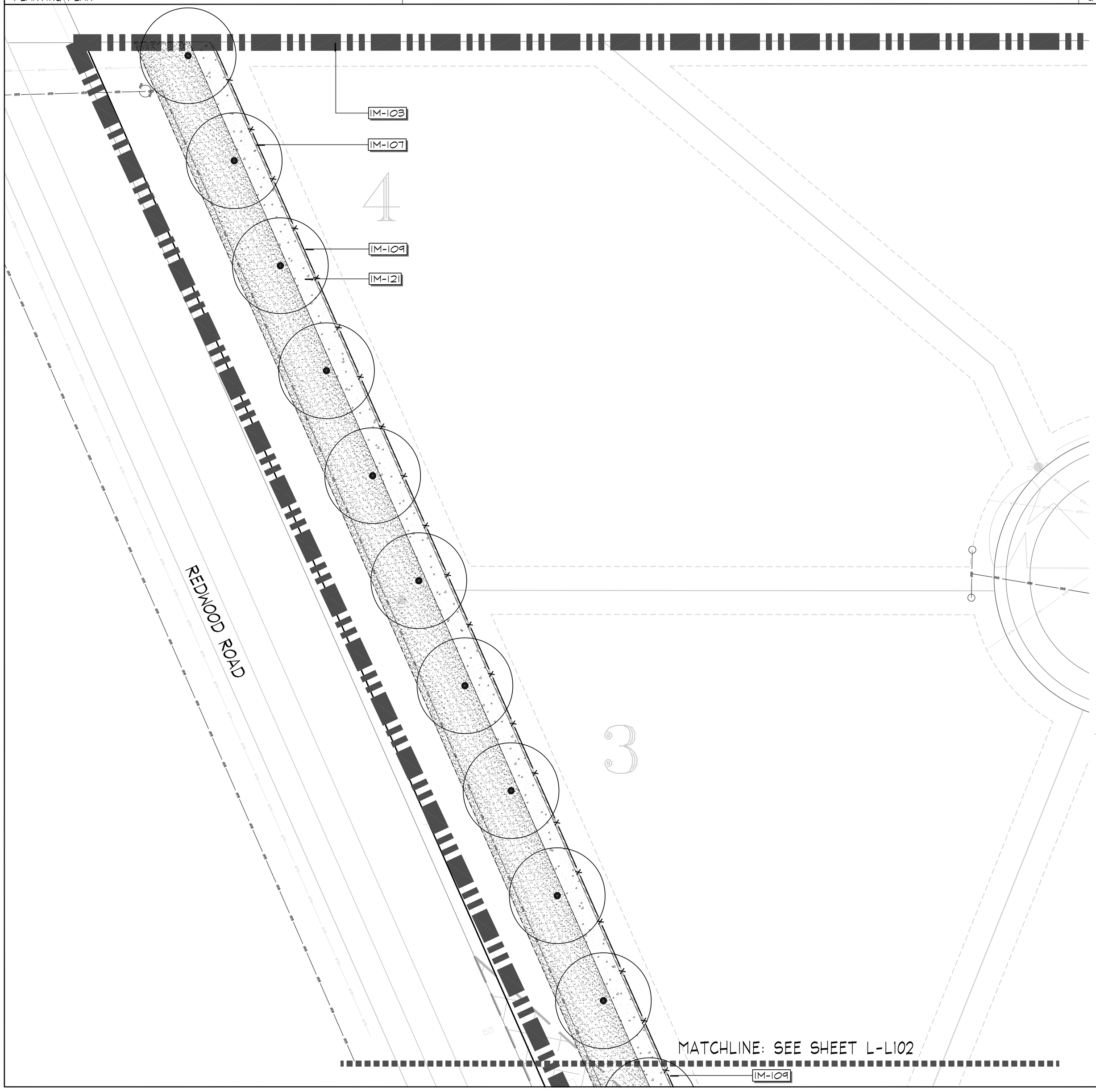

PLANT SCHEDULE

TREES	BOTANICAL NAME	COMMON NAME	CONT	CAL	QTY*
	Acer freemanii 'Jeffersred'	Autumn Blaze Maple	B & B	2.5"	2
	Fraxinus pennsylvanica 'Autumn Purple'	Autumn Purple Ash	B & B	2.5"	6
	Malus x 'Prairie Rose'	Prairie Rose Crab Apple	B & B	2.5"	10
	Picea glauca densata	Black Hills Spruce	B & B	6'H	1
	Ulmus parvifolia	Lacebark Elm	B & B	2.5"	31

SHRUBS	BOTANICAL NAME	COMMON NAME	SIZE	QTY
	Buddleia x 'Tutti Frutti'	Tutti Frutti Butterfly Bush	5 gal	124
	Cornus sericea 'Arctic Fire'	Arctic Fire Dwarf Dogwood	5 gal	54
	Juniperus chinensis 'Sea Green'	Sea Green Juniper	5 gal	74
	Physocarpus opulifolius	Ninebark	5 gal	28
	Physocarpus opulifolius 'Lemon Candy'	Lemon Candy Dwarf Ninebark	5 gal	97
	Rhus aromatica 'Gro Low'	Skunkbush Sumac	5 gal	57
	Rhus glabra	Smooth Sumac	5 gal	36
	Sambucus caerulea	Blue Elderberry	5 gal	13
	Symphoricarpos albus	Common White Snowberry	5 gal	57

GROUND COVERS	BOTANICAL NAME	COMMON NAME	CONT	QTY
	Detention Seed Mix See Sht. L-L501 Dtl. K	Detention Seed Mix	seed	40,545 sf
	Poa pratensis	Turf-Grass	sod	27,958 sf
	Slope Stabilization Seed Mix See Sht. L-L501 Dtl. L	Slope Stabilization Seed Mix	seed	170,665 sf

* QUANTITY INFORMATION PROVIDED FOR REFERENCE ONLY. CONTRACTOR RESPONSIBLE TO VERIFY ALL QUANTITIES.

PLANTING NOTES

1. CONTRACTOR SHALL BE RESPONSIBLE FOR MAKING HIMSELF FAMILIAR WITH ALL UNDERGROUND UTILITIES, PIPES AND STRUCTURES. CONTRACTOR SHALL TAKE SOLE RESPONSIBILITY FOR ANY COSTS INCURRED DUE TO DAMAGE OF SAID UTILITIES.
2. CONTRACTOR SHALL NOT WILLFULLY PROCEED WITH CONSTRUCTION AS DESIGNED WHEN IT IS OBVIOUS THAT OBSTRUCTIONS AND/OR GRADE DIFFERENCES EXIST THAT MAY NOT HAVE BEEN KNOWN DURING DESIGN. SUCH CONDITIONS SHALL BE IMMEDIATELY BROUGHT TO THE ATTENTION OF THE OWNERS REP. THE CONTRACTOR SHALL ASSUME FULL RESPONSIBILITY FOR ALL NECESSARY REVISIONS DUE TO FAILURE TO GIVE SUCH NOTIFICATION.
3. CONTRACTOR SHALL BE RESPONSIBLE FOR ANY COORDINATION WITH SUBCONTRACTORS AS REQUIRED TO ACCOMPLISH THE LANDSCAPE CONSTRUCTION FOR THIS PROJECT.
4. ALL PLANT MATERIAL SHALL BE APPROVED BY THE OWNER'S REPRESENTATIVE UPON DELIVERY TO THE SITE, AND PRIOR TO INSTALLATION. ANY PROPOSED SUBSTITUTIONS OF PLANT SPECIES SHALL BE MADE WITH PLANTS OF EQUIVALENT OVERALL FORM, HEIGHT, BRANCHING HABIT, FLOWER, LEAF, COLOR, FRUIT AND CULTURE ONLY AS APPROVED BY THE OWNER'S REPRESENTATIVE.
5. THE CONTRACTOR SHALL SUPPLY ALL PLANT MATERIAL IN QUANTITIES SUFFICIENT TO COMPLETE THE PLANTING SHOWN ON THE DRAWINGS. IF DISCREPANCIES ARISE BETWEEN ACTUAL PLANTING AREA SIZES IN THE FIELD AND THOSE SHOWN ON THE PLANS, CONTRACTOR SHALL CONTACT THE OWNER'S REPRESENTATIVE FOR RESOLUTION. FAILURE TO MAKE SUCH CONFLICTS KNOWN WILL RESULT IN CONTRACTOR'S LIABILITY FOR MATERIALS RELOCATION.
6. FINAL LOCATIONS OF ALL PLANT MATERIALS SHALL BE SUBJECT TO APPROVAL OF THE OWNER'S REPRESENTATIVE. TREES SHALL NOT BE PLANTED LESS THAN 5'-0" FROM CURBS OR HARD SURFACE AREAS UNLESS A ROOT BARRIER IS INSTALLED.
7. CONTRACTOR SHALL PROVIDE SOIL ANALYSIS AND AMMEND SOIL AS RECOMMENDED. LANDSCAPE CONTRACTOR IS RESPONSIBLE FOR THE LAST 7 INCHES OF GRADE IN TURF SOD AREAS (6 INCHES OF TOPSOIL AND 1 INCH FOR SOD) AND 15 INCHES IN SHRUB BED AREAS (3 INCHES OF BARK MULCH AND 12" OF AMENDED TOPSOIL). IF NECESSARY DIG SUBGRADE IN SHRUB BEDS AND TURF AREAS DOWN AS SPECIFIED BEFORE PLACING AMENDED TOPSOIL. THE PLANTING ISLANDS IN THE PARKING LOTS SHALL HAVE ALL ROAD BASE REMOVED PRIOR TO PLACEMENT OF TOPSOIL. REFER TO GRADING PLAN FOR FINISH GRADE AND DRAINAGE.

REFERENCE SCHEDULE NOTES

SYMBOL	SITE IMPROVEMENTS DESCRIPTION
IM-101	6' TALL SEMI PRIVATE VINYL FENCE, BEIGE, SEE SHEET L-L501 DETAILS G AND H. FENCE TO BE INSTALLED BY DEVELOPER, TYP.
IM-102	REDUCE HEIGHT OF VINYL FENCE TO 3 FEET TALL FROM SIDEWALK TO 25 FEET BACK INTO PROPERTY, TYP.
IM-103	LIMIT OF WORK LINE, TYP.
IM-106	INSTALL CONCRETE MOW CURB 6" WIDE, TYP. SEE SHEET L-L501 DETAIL D
IM-107	INSTALL 1" TO 3" ROUND TAN ROCK MULCH TO A DEPTH OF 4" IN 1' WIDE STRIP, TYP.
IM-108	INSTALL BENCH, TYP. REFER TO SHT L-L502 DTL A.
IM-109	6' TALL WROUGHT IRON STYLE FENCE WITH MASONRY PILLARS EVERY 50 FEET TO MATCH CITY OF SARATOGA SPRINGS REDWOOD ROAD TRAIL CORRIDOR SEMI-PRIVATE FENCE. FENCE TO BE INSTALLED BY DEVELOPER. CONTRACTOR TO FIELD VERIFY AND SUBMIT SHOP DRAWINGS. SEE SHEET L-L501 DETAIL K
IM-110	ASPHALT TRAIL OR ACCESS DEIVE, SEE SHEET L-L501 DETAIL I
IM-121	8 FOOT WIDE CONCRETE TRAIL, SEE SHEET L-L501 DETAIL J

SCALE & NORTH ARROW

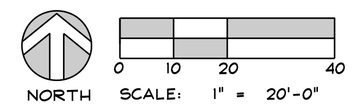

KEYPLAN

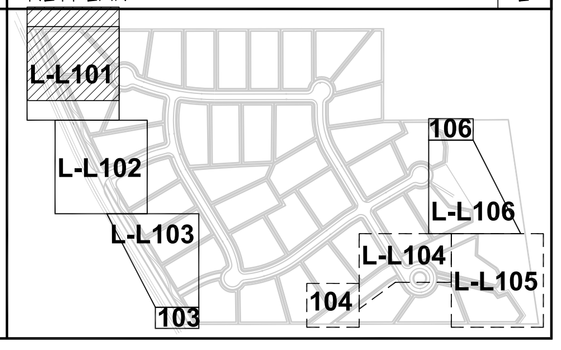

Arc Sitio Design, Inc
Landscape Architecture & Architectural Site Design

1058 East 2100 South
Salt Lake City, Utah 84106
office 801 . 487 . 4923
fax 801 . 466 . 3046
www.arcsitiodesign.com

consultant:

project

Sail House Development

Saratoga Springs, UT

date

SEPTEMBER 22, 2014

revisions

data

asd project no: 14027

title

SCHEMATIC PLANTING PLAN

sheet

L-L101

File : E:\14027_Sail House\Cadd\Planting.dwg Sep 22, 2014 - 9:46am

PLANTING PLAN

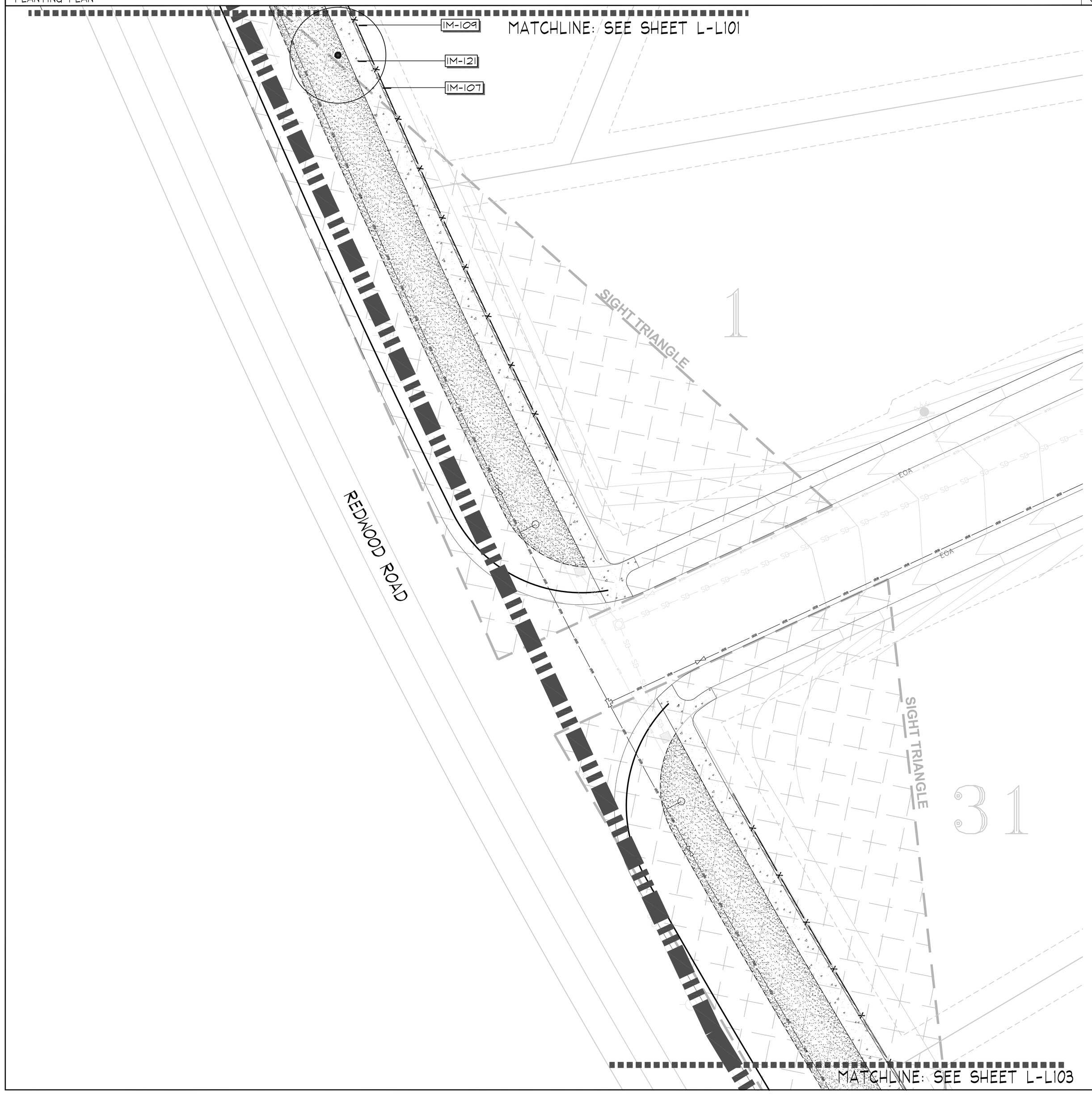

PLANT SCHEDULE

TREES	BOTANICAL NAME	COMMON NAME	CONT	CAL	QTY*
	Acer freemanii 'Jeffersred'	Autumn Blaze Maple	B & B	2.5"	2
	Fraxinus pennsylvanica 'Autumn Purple'	Autumn Purple Ash	B & B	2.5"	6
	Malus x 'Prairie Rose'	Prairie Rose Crab Apple	B & B	2.5"	10
	Picea glauca densata	Black Hills Spruce	B & B	6'H	1
	Ulmus parvifolia	Lacebark Elm	B & B	2.5"	31

SHRUBS	BOTANICAL NAME	COMMON NAME	SIZE	QTY
BD	Buddleia x 'Tutti Frutti'	Tutti Frutti Butterfly Bush	5 gal	124
SW SW	Cornus sericea 'Arctic Fire'	Arctic Fire Dwarf Dogwood	5 gal	54
J	Juniperus chinensis 'Sea Green'	Sea Green Juniper	5 gal	74
P	Physocarpus opulifolius	Ninebark	5 gal	28
P	Physocarpus opulifolius 'Lemon Candy'	Lemon Candy Dwarf Ninebark	5 gal	97
RA	Rhus aromatica 'Gro Low'	Skunkbush Sumac	5 gal	57
Glab	Rhus glabra	Smooth Sumac	5 gal	36
S	Sambucus caerulea	Blue Elderberry	5 gal	13
SYMP	Symphoricarpos albus	Common White Snowberry	5 gal	57

GROUND COVERS	BOTANICAL NAME	COMMON NAME	CONT	QTY
	Detention Seed Mix See Sht. L-L501 Dtl. K	Detention Seed Mix	seed	40,545 sf
	Poa pratensis	Turf-Grass	sod	27,958 sf
	Slope Stabilization Seed Mix See Sht. L-L501 Dtl. L	Slope Stabilization Seed Mix	seed	170,665 sf

* QUANTITY INFORMATION PROVIDED FOR REFERENCE ONLY. CONTRACTOR RESPONSIBLE TO VERIFY ALL QUANTITIES.

PLANTING NOTES

1. CONTRACTOR SHALL BE RESPONSIBLE FOR MAKING HIMSELF FAMILIAR WITH ALL UNDERGROUND UTILITIES, PIPES AND STRUCTURES. CONTRACTOR SHALL TAKE SOLE RESPONSIBILITY FOR ANY COSTS INCURRED DUE TO DAMAGE OF SAID UTILITIES.
2. CONTRACTOR SHALL NOT WILLFULLY PROCEED WITH CONSTRUCTION AS DESIGNED WHEN IT IS OBVIOUS THAT OBSTRUCTIONS AND/OR GRADE DIFFERENCES EXIST THAT MAY NOT HAVE BEEN KNOWN DURING DESIGN. SUCH CONDITIONS SHALL BE IMMEDIATELY BROUGHT TO THE ATTENTION OF THE OWNERS REP. THE CONTRACTOR SHALL ASSUME FULL RESPONSIBILITY FOR ALL NECESSARY REVISIONS DUE TO FAILURE TO GIVE SUCH NOTIFICATION.
3. CONTRACTOR SHALL BE RESPONSIBLE FOR ANY COORDINATION WITH SUBCONTRACTORS AS REQUIRED TO ACCOMPLISH THE LANDSCAPE CONSTRUCTION FOR THIS PROJECT.
4. ALL PLANT MATERIAL SHALL BE APPROVED BY THE OWNER'S REPRESENTATIVE UPON DELIVERY TO THE SITE, AND PRIOR TO INSTALLATION. ANY PROPOSED SUBSTITUTIONS OF PLANT SPECIES SHALL BE MADE WITH PLANTS OF EQUIVALENT OVERALL FORM, HEIGHT, BRANCHING HABIT, FLOWER, LEAF, COLOR, FRUIT AND CULTURE ONLY AS APPROVED BY THE OWNER'S REPRESENTATIVE.
5. THE CONTRACTOR SHALL SUPPLY ALL PLANT MATERIAL IN QUANTITIES SUFFICIENT TO COMPLETE THE PLANTING SHOWN ON THE DRAWINGS. IF DISCREPANCIES ARISE BETWEEN ACTUAL PLANTING AREA SIZES IN THE FIELD AND THOSE SHOWN ON THE PLANS, CONTRACTOR SHALL CONTACT THE OWNER'S REPRESENTATIVE FOR RESOLUTION. FAILURE TO MAKE SUCH CONFLICTS KNOWN WILL RESULT IN CONTRACTOR'S LIABILITY FOR MATERIALS RELOCATION.
6. FINAL LOCATIONS OF ALL PLANT MATERIALS SHALL BE SUBJECT TO APPROVAL OF THE OWNER'S REPRESENTATIVE. TREES SHALL NOT BE PLANTED LESS THAN 5'-0" FROM CURBS OR HARD SURFACE AREAS UNLESS A ROOT BARRIER IS INSTALLED.
7. CONTRACTOR SHALL PROVIDE SOIL ANALYSIS AND AMMEND SOIL AS RECOMMENDED. LANDSCAPE CONTRACTOR IS RESPONSIBLE FOR THE LAST 7 INCHES OF GRADE IN TURF SOD AREAS (6 INCHES OF TOPSOIL AND 1 INCH FOR SOD) AND 15 INCHES IN SHRUB BED AREAS (3 INCHES OF BARK MULCH AND 12" OF AMENDED TOPSOIL). IF NECESSARY DIG SUBGRADE IN SHRUB BEDS AND TURF AREAS DOWN AS SPECIFIED BEFORE PLACING AMENDED TOPSOIL. THE PLANTING ISLANDS IN THE PARKING LOTS SHALL HAVE ALL ROAD BASE REMOVED PRIOR TO PLACEMENT OF TOPSOIL. REFER TO GRADING PLAN FOR FINISH GRADE AND DRAINAGE.

REFERENCE SCHEDULE NOTES

SYMBOL	SITE IMPROVEMENTS DESCRIPTION
IM-101	6' TALL SEMI PRIVATE VINYL FENCE, BEIGE, SEE SHEET L-L501 DETAILS G AND H. FENCE TO BE INSTALLED BY DEVELOPER, TYP.
IM-102	REDUCE HEIGHT OF VINYL FENCE TO 3 FEET TALL FROM SIDEWALK TO 25 FEET BACK INTO PROPERTY, TYP.
IM-103	LIMIT OF WORK LINE, TYP.
IM-106	INSTALL CONCRETE MOW CURB 6" WIDE, TYP. SEE SHEET L-L501 DETAIL D
IM-107	INSTALL 1" TO 3" ROUND TAN ROCK MULCH TO A DEPTH OF 4" IN 1' WIDE STRIP, TYP.
IM-108	INSTALL BENCH, TYP. REFER TO SHT L-L502 DTL A.
IM-109	6' TALL WROUGHT IRON STYLE FENCE WITH MASONRY PILLARS EVERY 50 FEET TO MATCH CITY OF SARATOGA SPRINGS REDWOOD ROAD TRAIL CORRIDOR SEMI-PRIVATE FENCE. FENCE TO BE INSTALLED BY DEVELOPER. CONTRACTOR TO FIELD VERIFY AND SUBMIT SHOP DRAWINGS. SEE SHEET L-L501 DETAIL K
IM-110	ASPHALT TRAIL OR ACCESS DEIVE, SEE SHEET L-L501 DETAIL I
IM-121	8 FOOT WIDE CONCRETE TRAIL, SEE SHEET L-L501 DETAIL J

SCALE & NORTH ARROW

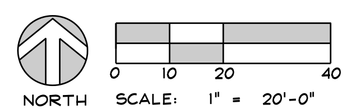

KEYPLAN

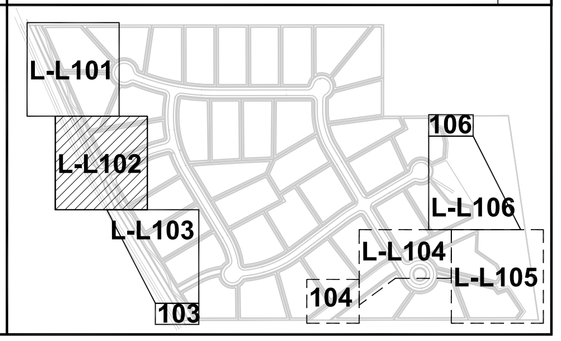

Arc Sitio Design, Inc
Landscape Architecture & Architectural Site Design
1058 East 2100 South
Salt Lake City, Utah 84106
office 801 . 487 . 4923
fax 801 . 466 . 3046
www.arcsitiodesign.com

consultant:

project

Sail House Development

Saratoga Springs, UT

date

SEPTEMBER 22, 2014

revisions

data

asd project no: 14027

title

SCHEMATIC PLANTING PLAN

sheet

L-L102

File : E:\14027_Soil House\Cadd\Planting.dwg Sep 22, 2014 - 9:46am

PLANTING PLAN — G

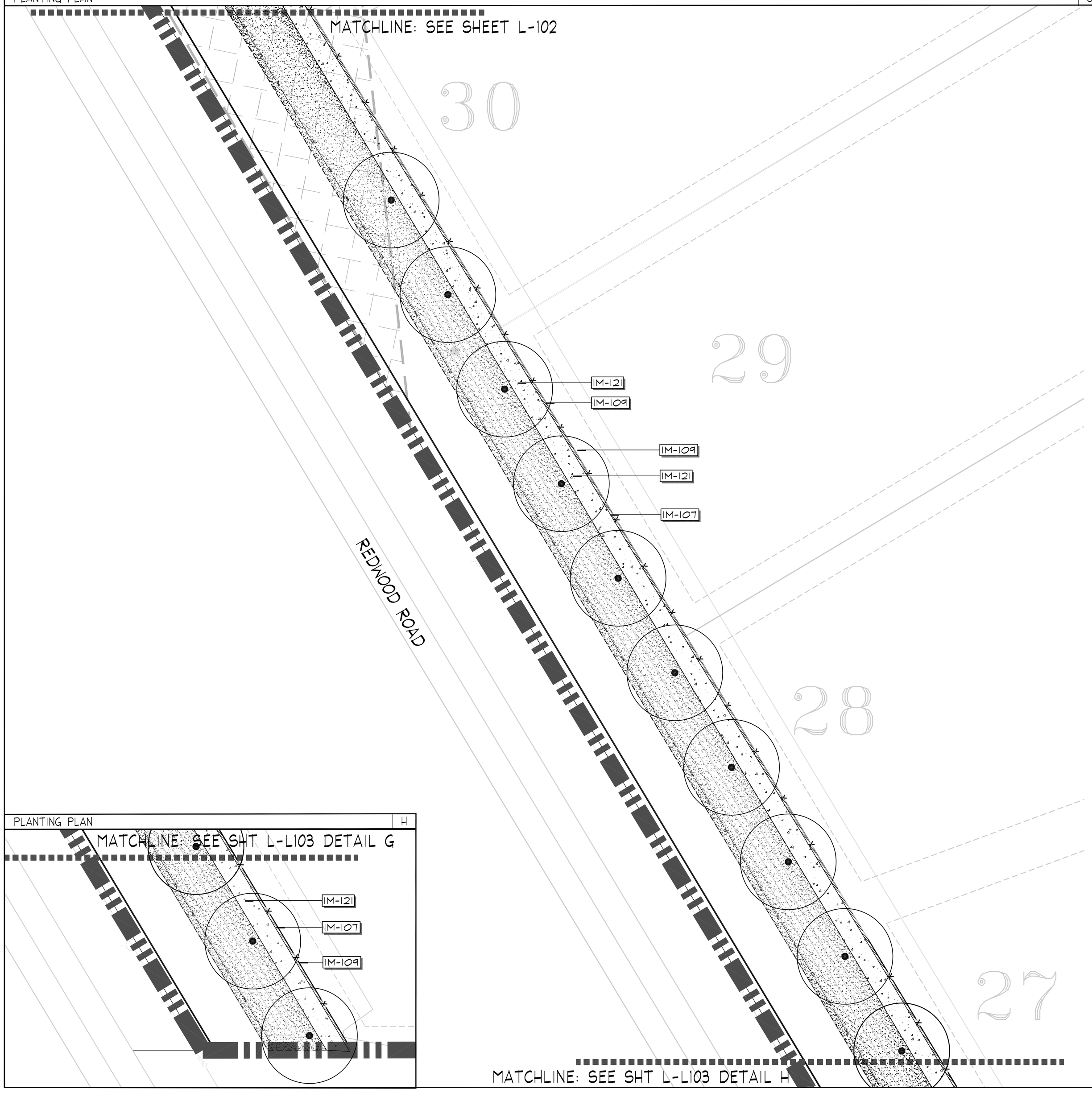

PLANTING PLAN — H

PLANT SCHEDULE — A

TREES	BOTANICAL NAME	COMMON NAME	CONT	CAL	QTY*
	Acer freemanii 'Jeffersred'	Autumn Blaze Maple	B & B	2.5"	2
	Fraxinus pennsylvanica 'Autumn Purple'	Autumn Purple Ash	B & B	2.5"	6
	Malus x 'Prairie Rose'	Prairie Rose Crab Apple	B & B	2.5"	10
	Picea glauca densata	Black Hills Spruce	B & B	6'H	1
	Ulmus parvifolia	Lacebark Elm	B & B	2.5"	31

SHRUBS	BOTANICAL NAME	COMMON NAME	SIZE	QTY
	Buddleia x 'Tutti Frutti'	Tutti Frutti Butterfly Bush	5 gal	124
	Cornus sericea 'Arctic Fire'	Arctic Fire Dwarf Dogwood	5 gal	54
	Juniperus chinensis 'Sea Green'	Sea Green Juniper	5 gal	74
	Physocarpus opulifolius	Ninebark	5 gal	28
	Physocarpus opulifolius 'Lemon Candy'	Lemon Candy Dwarf Ninebark	5 gal	97
	Rhus aromatica 'Gro Low'	Skunkbush Sumac	5 gal	57
	Rhus glabra	Smooth Sumac	5 gal	36
	Sambucus caerulea	Blue Elderberry	5 gal	13
	Symphoricarpos albus	Common White Snowberry	5 gal	57

GROUND COVERS	BOTANICAL NAME	COMMON NAME	CONT	QTY
	Detention Seed Mix See Sht. L-L501 Dtl. K	Detention Seed Mix	seed	40,545 sf
	Poa pratensis	Turf-Grass	sod	27,958 sf
	Slope Stabilization Seed Mix See Sht. L-L501 Dtl. L	Slope Stabilization Seed Mix	seed	170,665 sf

* QUANTITY INFORMATION PROVIDED FOR REFERENCE ONLY. CONTRACTOR RESPONSIBLE TO VERIFY ALL QUANTITIES.

PLANTING NOTES — B

1. CONTRACTOR SHALL BE RESPONSIBLE FOR MAKING HIMSELF FAMILIAR WITH ALL UNDERGROUND UTILITIES, PIPES AND STRUCTURES. CONTRACTOR SHALL TAKE SOLE RESPONSIBILITY FOR ANY COSTS INCURRED DUE TO DAMAGE OF SAID UTILITIES.
2. CONTRACTOR SHALL NOT WILLFULLY PROCEED WITH CONSTRUCTION AS DESIGNED WHEN IT IS OBVIOUS THAT OBSTRUCTIONS AND/OR GRADE DIFFERENCES EXIST THAT MAY NOT HAVE BEEN KNOWN DURING DESIGN. SUCH CONDITIONS SHALL BE IMMEDIATELY BROUGHT TO THE ATTENTION OF THE OWNERS REP. THE CONTRACTOR SHALL ASSUME FULL RESPONSIBILITY FOR ALL NECESSARY REVISIONS DUE TO FAILURE TO GIVE SUCH NOTIFICATION.
3. CONTRACTOR SHALL BE RESPONSIBLE FOR ANY COORDINATION WITH SUBCONTRACTORS AS REQUIRED TO ACCOMPLISH THE LANDSCAPE CONSTRUCTION FOR THIS PROJECT.
4. ALL PLANT MATERIAL SHALL BE APPROVED BY THE OWNER'S REPRESENTATIVE UPON DELIVERY TO THE SITE, AND PRIOR TO INSTALLATION. ANY PROPOSED SUBSTITUTIONS OF PLANT SPECIES SHALL BE MADE WITH PLANTS OF EQUIVALENT OVERALL FORM, HEIGHT, BRANCHING HABIT, FLOWER, LEAF, COLOR, FRUIT AND CULTURE ONLY AS APPROVED BY THE OWNER'S REPRESENTATIVE.
5. THE CONTRACTOR SHALL SUPPLY ALL PLANT MATERIAL IN QUANTITIES SUFFICIENT TO COMPLETE THE PLANTING SHOWN ON THE DRAWINGS. IF DISCREPANCIES ARISE BETWEEN ACTUAL PLANTING AREA SIZES IN THE FIELD AND THOSE SHOWN ON THE PLANS, CONTRACTOR SHALL CONTACT THE OWNER'S REPRESENTATIVE FOR RESOLUTION. FAILURE TO MAKE SUCH CONFLICTS KNOWN WILL RESULT IN CONTRACTOR'S LIABILITY FOR MATERIALS RELOCATION.
6. FINAL LOCATIONS OF ALL PLANT MATERIALS SHALL BE SUBJECT TO APPROVAL OF THE OWNER'S REPRESENTATIVE. TREES SHALL NOT BE PLANTED LESS THAN 5'-0" FROM CURBS OR HARD SURFACE AREAS UNLESS A ROOT BARRIER IS INSTALLED.
7. CONTRACTOR SHALL PROVIDE SOIL ANALYSIS AND AMMEND SOIL AS RECOMMENDED. LANDSCAPE CONTRACTOR IS RESPONSIBLE FOR THE LAST 7 INCHES OF GRADE IN TURF SOD AREAS (6 INCHES OF TOPSOIL AND 1 INCH FOR SOD) AND 15 INCHES IN SHRUB BED AREAS (3 INCHES OF BARK MULCH AND 12" OF AMENDED TOPSOIL). IF NECESSARY DIG SUBGRADE IN SHRUB BEDS AND TURF AREAS DOWN AS SPECIFIED BEFORE PLACING AMENDED TOPSOIL. THE PLANTING ISLANDS IN THE PARKING LOTS SHALL HAVE ALL ROAD BASE REMOVED PRIOR TO PLACEMENT OF TOPSOIL. REFER TO GRADING PLAN FOR FINISH GRADE AND DRAINAGE.

REFERENCE SCHEDULE NOTES — C

SYMBOL	SITE IMPROVEMENTS DESCRIPTION
1M-101	6' TALL SEMI PRIVATE VINYL FENCE, BEIGE, SEE SHEET L-L501 DETAILS G AND H. FENCE TO BE INSTALLED BY DEVELOPER, TYP.
1M-102	REDUCE HEIGHT OF VINYL FENCE TO 3 FEET TALL FROM SIDEWALK TO 25 FEET BACK INTO PROPERTY, TYP.
1M-103	LIMIT OF WORK LINE, TYP.
1M-106	INSTALL CONCRETE MOW CURB 6" WIDE, TYP. SEE SHEET L-L501 DETAIL D
1M-107	INSTALL 1" TO 3" ROUND TAN ROCK MULCH TO A DEPTH OF 4" IN 1' WIDE STRIP, TYP.
1M-108	INSTALL BENCH, TYP. REFER TO SHT L-L502 DTL A.
1M-109	6' TALL WROUGHT IRON STYLE FENCE WITH MASONRY PILLARS EVERY 50 FEET TO MATCH CITY OF SARATOGA SPRINGS REDWOOD ROAD TRAIL CORRIDOR SEMI-PRIVATE FENCE. FENCE TO BE INSTALLED BY DEVELOPER. CONTRACTOR TO FIELD VERIFY AND SUBMIT SHOP DRAWINGS. SEE SHEET L-L501 DETAIL K
1M-110	ASPHALT TRAIL OR ACCESS DEIVE, SEE SHEET L-L501 DETAIL I
1M-121	8 FOOT WIDE CONCRETE TRAIL, SEE SHEET L-L501 DETAIL J

SCALE & NORTH ARROW — D

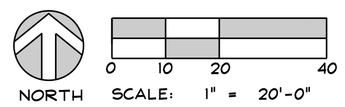

KEYPLAN — E

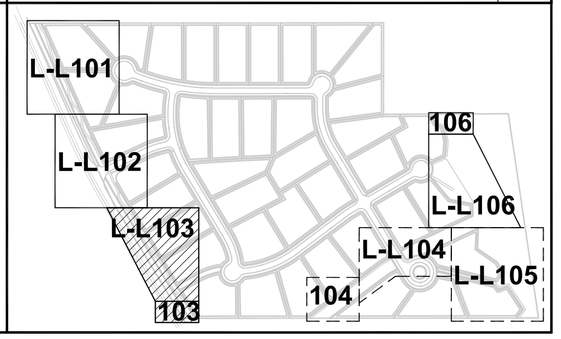

Arc Sitio Design, Inc
Landscape Architecture & Architectural Site Design
1058 East 2100 South
Salt Lake City, Utah 84106
office 801 . 487 . 4923
fax 801 . 466 . 3046
www.arcsitiodesign.com

consultant:

project

Sail House Development

Saratoga Springs, UT

date

SEPTEMBER 22, 2014

revisions

data

asd project no: 14027

title

SCHEMATIC PLANTING PLAN

sheet

L-L103

File : E:\14027_Sail House\Cadd\Planting.dwg Sep 22, 2014 - 9:43am

PLANTING PLAN

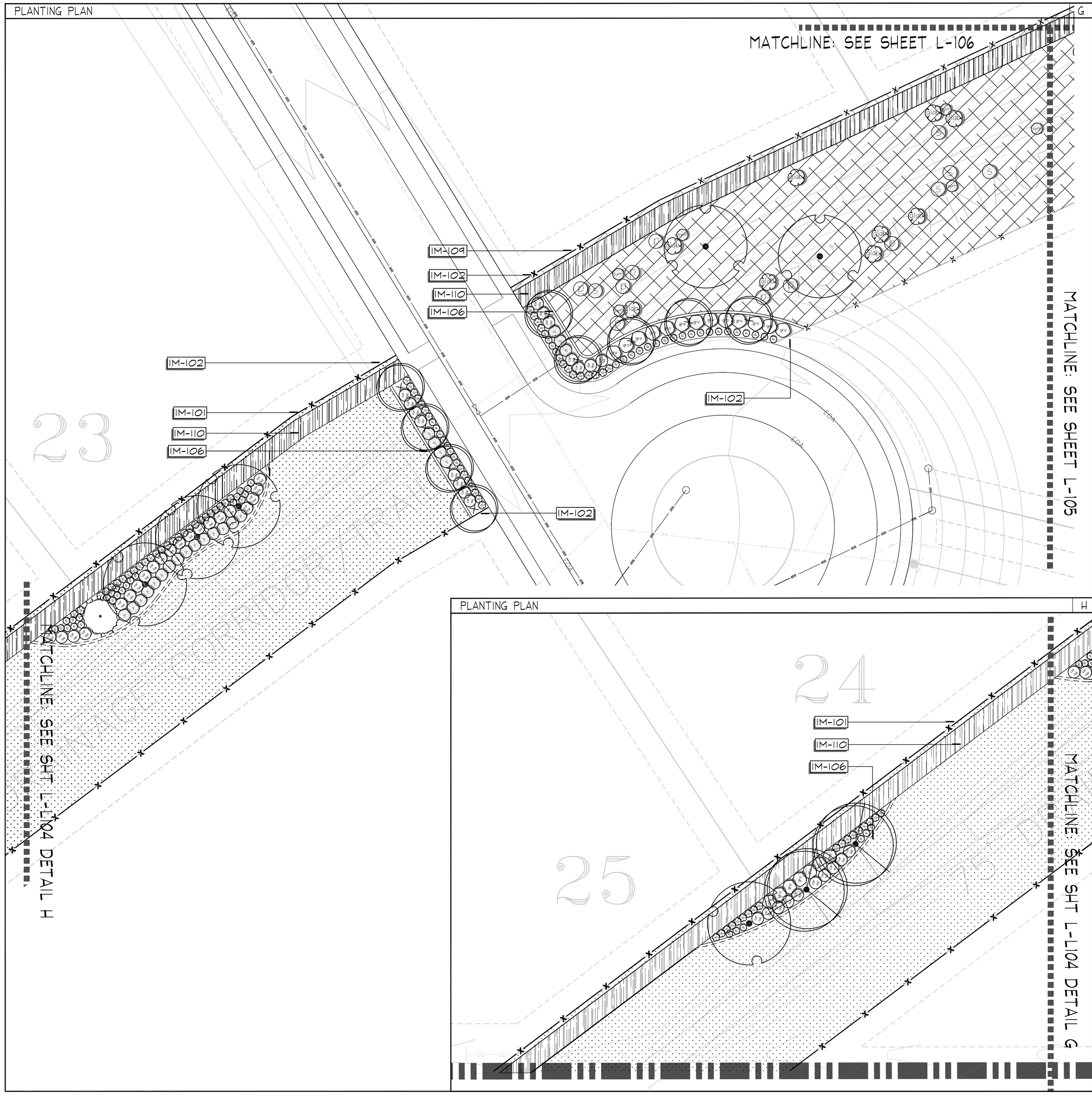

PLANT SCHEDULE

TREES	BOTANICAL NAME	COMMON NAME	CONT	CAL	QTY*
	Acer freemanii 'Jeffersred'	Autumn Blaze Maple	B & B	2.5"	2
	Fraxinus pennsylvanica 'Autumn Purple'	Autumn Purple Ash	B & B	2.5"	6
+	Malus x 'Prairie Rose'	Prairie Rose Crab Apple	B & B	2.5"	10
	Picea glauca densata	Black Hills Spruce	B & B	6'H	1
	Ulmus parvifolia	Lacebark Elm	B & B	2.5"	31

SHRUBS	BOTANICAL NAME	COMMON NAME	SIZE	QTY
BD	Buddleia x 'Tutti Frutti'	Tutti Frutti Butterfly Bush	5 gal	124
CSI	Cornus sericea 'Arctic Fire'	Arctic Fire Dwarf Dogwood	5 gal	54
JCS	Juniperus chinensis 'Sea Green'	Sea Green Juniper	5 gal	74
PO	Physocarpus opulifolius	Ninebark	5 gal	28
PO	Physocarpus opulifolius 'Lemon Candy'	Lemon Candy Dwarf Ninebark	5 gal	97
RAG	Rhus aromatica 'Gro Low'	Skunkbush Sumac	5 gal	57
RGL	Rhus glabra	Smooth Sumac	5 gal	36
SC	Sambucus caerulea	Blue Elderberry	5 gal	13
SYM	Symphoricarpos albus	Common White Snowberry	5 gal	57

GROUND COVERS	BOTANICAL NAME	COMMON NAME	CONT	QTY
	Detention Seed Mix See Sht. L-L501 Dtl. K	Detention Seed Mix	seed	40,545 sf
	Poa pratensis	Turf-Grass	sod	27,958 sf
	Slope Stabilization Seed Mix See Sht. L-L501 Dtl. L	Slope Stabilization Seed Mix	seed	170,665 sf

* QUANTITY INFORMATION PROVIDED FOR REFERENCE ONLY. CONTRACTOR RESPONSIBLE TO VERIFY ALL QUANTITIES.

PLANTING NOTES

1. CONTRACTOR SHALL BE RESPONSIBLE FOR MAKING HIMSELF FAMILIAR WITH ALL UNDERGROUND UTILITIES, PIPES AND STRUCTURES. CONTRACTOR SHALL TAKE SOLE RESPONSIBILITY FOR ANY COSTS INCURRED DUE TO DAMAGE OF SAID UTILITIES.
2. CONTRACTOR SHALL NOT WILLFULLY PROCEED WITH CONSTRUCTION AS DESIGNED WHEN IT IS OBVIOUS THAT OBSTRUCTIONS AND/OR GRADE DIFFERENCES EXIST THAT MAY NOT HAVE BEEN KNOWN DURING DESIGN. SUCH CONDITIONS SHALL BE IMMEDIATELY BROUGHT TO THE ATTENTION OF THE OWNERS REP. THE CONTRACTOR SHALL ASSUME FULL RESPONSIBILITY FOR ALL NECESSARY REVISIONS DUE TO FAILURE TO GIVE SUCH NOTIFICATION.
3. CONTRACTOR SHALL BE RESPONSIBLE FOR ANY COORDINATION WITH SUBCONTRACTORS AS REQUIRED TO ACCOMPLISH THE LANDSCAPE CONSTRUCTION FOR THIS PROJECT.
4. ALL PLANT MATERIAL SHALL BE APPROVED BY THE OWNER'S REPRESENTATIVE UPON DELIVERY TO THE SITE, AND PRIOR TO INSTALLATION. ANY PROPOSED SUBSTITUTIONS OF PLANT SPECIES SHALL BE MADE WITH PLANTS OF EQUIVALENT OVERALL FORM, HEIGHT, BRANCHING HABIT, FLOWER, LEAF, COLOR, FRUIT AND CULTURE ONLY AS APPROVED BY THE OWNER'S REPRESENTATIVE.
5. THE CONTRACTOR SHALL SUPPLY ALL PLANT MATERIAL IN QUANTITIES SUFFICIENT TO COMPLETE THE PLANTING SHOWN ON THE DRAWINGS. IF DISCREPANCIES ARISE BETWEEN ACTUAL PLANTING AREA SIZES IN THE FIELD AND THOSE SHOWN ON THE PLANS, CONTRACTOR SHALL CONTACT THE OWNER'S REPRESENTATIVE FOR RESOLUTION. FAILURE TO MAKE SUCH CONFLICTS KNOWN WILL RESULT IN CONTRACTOR'S LIABILITY FOR MATERIALS RELOCATION.
6. FINAL LOCATIONS OF ALL PLANT MATERIALS SHALL BE SUBJECT TO APPROVAL OF THE OWNER'S REPRESENTATIVE. TREES SHALL NOT BE PLANTED LESS THAN 5'-0" FROM CURBS OR HARD SURFACE AREAS UNLESS A ROOT BARRIER IS INSTALLED.
7. CONTRACTOR SHALL PROVIDE SOIL ANALYSIS AND AMMEND SOIL AS RECOMMENDED. LANDSCAPE CONTRACTOR IS RESPONSIBLE FOR THE LAST 7 INCHES OF GRADE IN TURF SOD AREAS (6 INCHES OF TOPSOIL AND 1 INCH FOR SOD) AND 15 INCHES IN SHRUB BED AREAS (3 INCHES OF BARK MULCH AND 12" OF AMIENDED TOPSOIL). IF NECESSARY DIG SUBGRADE IN SHRUB BEDS AND TURF AREAS DOWN AS SPECIFIED BEFORE PLACING AMENDED TOPSOIL. THE PLANTING ISLANDS IN THE PARKING LOTS SHALL HAVE ALL ROAD BASE REMOVED PRIOR TO PLACEMENT OF TOPSOIL. REFER TO GRADING PLAN FOR FINISH GRADE AND DRAINAGE.

REFERENCE SCHEDULE NOTES

SYMBOL	SITE IMPROVEMENTS DESCRIPTION
IM-101	6' TALL SEMI PRIVATE VINYL FENCE, BEIGE, SEE SHEET L-L501 DETAILS G AND H. FENCE TO BE INSTALLED BY DEVELOPER, TYP.
IM-102	REDUCE HEIGHT OF VINYL FENCE TO 3 FEET TALL FROM SIDEWALK TO 25 FEET BACK INTO PROPERTY, TYP.
IM-103	LIMIT OF WORK LINE, TYP.
IM-106	INSTALL CONCRETE MOW CURB 6" WIDE, TYP. SEE SHEET L-L501 DETAIL D
IM-107	INSTALL 1" TO 3" ROUND TAN ROCK MULCH TO A DEPTH OF 4" IN 1' WIDE STRIP, TYP.
IM-108	INSTALL BENCH, TYP. REFER TO SHT L-L502 DTL A.
IM-109	6' TALL WROUGHT IRON STYLE FENCE WITH MASONRY PILLARS EVERY 50 FEET TO MATCH CITY OF SARATOGA SPRINGS REDWOOD ROAD TRAIL CORRIDOR SEMI-PRIVATE FENCE. FENCE TO BE INSTALLED BY DEVELOPER. CONTRACTOR TO FIELD VERIFY AND SUBMIT SHOP DRAWINGS. SEE SHEET L-L501 DETAIL K
IM-110	ASPHALT TRAIL OR ACCESS DEIVE, SEE SHEET L-L501 DETAIL I
IM-121	8 FOOT WIDE CONCRETE TRAIL, SEE SHEET L-L501 DETAIL J

SCALE & NORTH ARROW

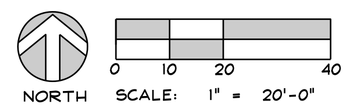

KEYPLAN

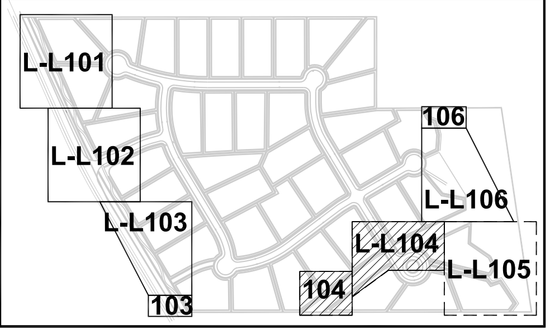

Arc Sitio Design, Inc
Landscape Architecture & Architectural Site Design
1058 East 2100 South
Salt Lake City, Utah 84106
office 801 . 487 . 4923
fax 801 . 466 . 3046
www.arcsitiodesign.com

consultant:

project
Sail House Development
Saratoga Springs, UT

date
SEPTEMBER 22, 2014

revisions

data
asd project no: 14027

title
SCHEMATIC PLANTING PLAN

sheet
L-L104

File : E:\14027_Sail House\Cadd\Planting.dwg Sep 22, 2014 - 9:42am

PLANTING PLAN

G

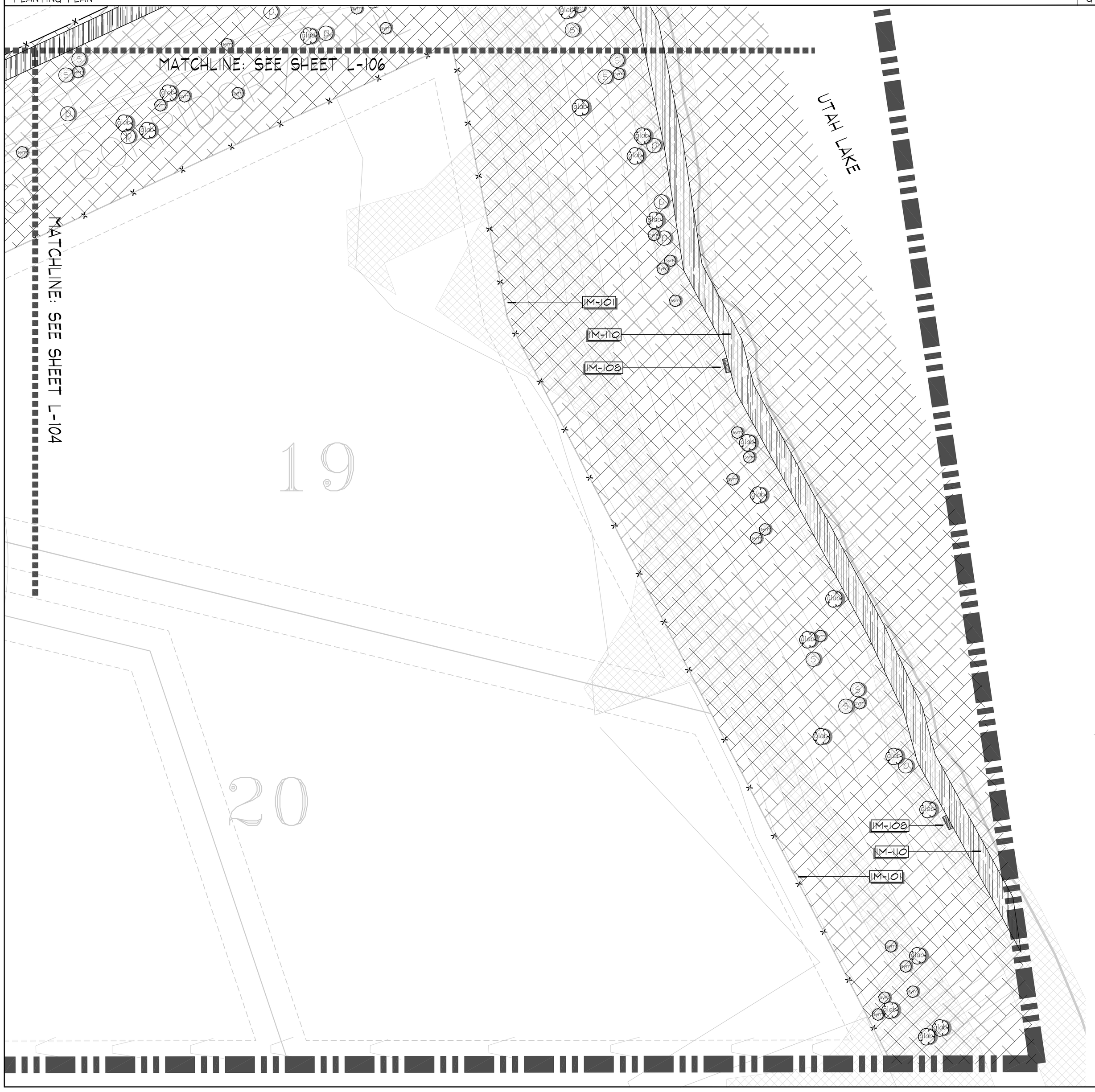

PLANT SCHEDULE

A

TREES	BOTANICAL NAME	COMMON NAME	CONT	CAL	QTY*
	Acer freemanii 'Jeffersred'	Autumn Blaze Maple	B & B	2.5"	2
	Fraxinus pennsylvanica 'Autumn Purple'	Autumn Purple Ash	B & B	2.5"	6
	Malus x 'Prairie Rose'	Prairie Rose Crab Apple	B & B	2.5"	10
	Picea glauca densata	Black Hills Spruce	B & B	6'H	1
	Ulmus parvifolia	Lacebark Elm	B & B	2.5"	31

SHRUBS	BOTANICAL NAME	COMMON NAME	SIZE	QTY
	Buddleia x 'Tutti Frutti'	Tutti Frutti Butterfly Bush	5 gal	124
	Cornus sericea 'Arctic Fire'	Arctic Fire Dwarf Dogwood	5 gal	54
	Juniperus chinensis 'Sea Green'	Sea Green Juniper	5 gal	74
	Physocarpus opulifolius	Ninebark	5 gal	28
	Physocarpus opulifolius 'Lemon Candy'	Lemon Candy Dwarf Ninebark	5 gal	97
	Rhus aromatica 'Gro Low'	Skunkbush Sumac	5 gal	57
	Rhus glabra	Smooth Sumac	5 gal	36
	Sambucus caerulea	Blue Elderberry	5 gal	13
	Symphoricarpos albus	Common White Snowberry	5 gal	57

GROUND COVERS	BOTANICAL NAME	COMMON NAME	CONT	QTY
	Detention Seed Mix See Sht. L-L501 Dtl. K	Detention Seed Mix	seed	40,545 sf
	Poa pratensis	Turf-Grass	sod	27,958 sf
	Slope Stabilization Seed Mix See Sht. L-L501 Dtl. L	Slope Stabilization Seed Mix	seed	170,665 sf

* QUANTITY INFORMATION PROVIDED FOR REFERENCE ONLY. CONTRACTOR RESPONSIBLE TO VERIFY ALL QUANTITIES.

PLANTING NOTES

B

1. CONTRACTOR SHALL BE RESPONSIBLE FOR MAKING HIMSELF FAMILIAR WITH ALL UNDERGROUND UTILITIES, PIPES AND STRUCTURES. CONTRACTOR SHALL TAKE SOLE RESPONSIBILITY FOR ANY COSTS INCURRED DUE TO DAMAGE OF SAID UTILITIES.
2. CONTRACTOR SHALL NOT WILLFULLY PROCEED WITH CONSTRUCTION AS DESIGNED WHEN IT IS OBVIOUS THAT OBSTRUCTIONS AND/OR GRADE DIFFERENCES EXIST THAT MAY NOT HAVE BEEN KNOWN DURING DESIGN. SUCH CONDITIONS SHALL BE IMMEDIATELY BROUGHT TO THE ATTENTION OF THE OWNERS REP. THE CONTRACTOR SHALL ASSUME FULL RESPONSIBILITY FOR ALL NECESSARY REVISIONS DUE TO FAILURE TO GIVE SUCH NOTIFICATION.
3. CONTRACTOR SHALL BE RESPONSIBLE FOR ANY COORDINATION WITH SUBCONTRACTORS AS REQUIRED TO ACCOMPLISH THE LANDSCAPE CONSTRUCTION FOR THIS PROJECT.
4. ALL PLANT MATERIAL SHALL BE APPROVED BY THE OWNER'S REPRESENTATIVE UPON DELIVERY TO THE SITE, AND PRIOR TO INSTALLATION. ANY PROPOSED SUBSTITUTIONS OF PLANT SPECIES SHALL BE MADE WITH PLANTS OF EQUIVALENT OVERALL FORM, HEIGHT, BRANCHING HABIT, FLOWER, LEAF, COLOR, FRUIT AND CULTURE ONLY AS APPROVED BY THE OWNER'S REPRESENTATIVE.
5. THE CONTRACTOR SHALL SUPPLY ALL PLANT MATERIAL IN QUANTITIES SUFFICIENT TO COMPLETE THE PLANTING SHOWN ON THE DRAWINGS. IF DISCREPANCIES ARISE BETWEEN ACTUAL PLANTING AREA SIZES IN THE FIELD AND THOSE SHOWN ON THE PLANS, CONTRACTOR SHALL CONTACT THE OWNER'S REPRESENTATIVE FOR RESOLUTION. FAILURE TO MAKE SUCH CONFLICTS KNOWN WILL RESULT IN CONTRACTOR'S LIABILITY FOR MATERIALS RELOCATION.
6. FINAL LOCATIONS OF ALL PLANT MATERIALS SHALL BE SUBJECT TO APPROVAL OF THE OWNER'S REPRESENTATIVE. TREES SHALL NOT BE PLANTED LESS THAN 5'-0" FROM CURBS OR HARD SURFACE AREAS UNLESS A ROOT BARRIER IS INSTALLED.
7. CONTRACTOR SHALL PROVIDE SOIL ANALYSIS AND AMMEND SOIL AS RECOMMENDED. LANDSCAPE CONTRACTOR IS RESPONSIBLE FOR THE LAST 7 INCHES OF GRADE IN TURF SOD AREAS (6 INCHES OF TOPSOIL AND 1 INCH FOR SOD) AND 15 INCHES IN SHRUB BED AREAS (3 INCHES OF BARK MULCH AND 12" OF AMENDED TOPSOIL). IF NECESSARY DIG SUBGRADE IN SHRUB BEDS AND TURF AREAS DOWN AS SPECIFIED BEFORE PLACING AMENDED TOPSOIL. THE PLANTING ISLANDS IN THE PARKING LOTS SHALL HAVE ALL ROAD BASE REMOVED PRIOR TO PLACEMENT OF TOPSOIL. REFER TO GRADING PLAN FOR FINISH GRADE AND DRAINAGE.

REFERENCE SCHEDULE NOTES

C

SYMBOL	SITE IMPROVEMENTS DESCRIPTION
IM-101	6' TALL SEMI PRIVATE VINYL FENCE, BEIGE, SEE SHEET L-L501 DETAILS G AND H. FENCE TO BE INSTALLED BY DEVELOPER, TYP.
IM-102	REDUCE HEIGHT OF VINYL FENCE TO 3 FEET TALL FROM SIDEWALK TO 25 FEET BACK INTO PROPERTY, TYP.
IM-103	LIMIT OF WORK LINE, TYP.
IM-106	INSTALL CONCRETE MOW CURB 6" WIDE, TYP. SEE SHEET L-L501 DETAIL D
IM-107	INSTALL 1" TO 3" ROUND TAN ROCK MULCH TO A DEPTH OF 4" IN 1' WIDE STRIP, TYP.
IM-108	INSTALL BENCH, TYP. REFER TO SHT L-L502 DTL A.
IM-109	6' TALL WROUGHT IRON STYLE FENCE WITH MASONRY PILLARS EVERY 50 FEET TO MATCH CITY OF SARATOGA SPRINGS REDWOOD ROAD TRAIL CORRIDOR SEMI-PRIVATE FENCE. FENCE TO BE INSTALLED BY DEVELOPER. CONTRACTOR TO FIELD VERIFY AND SUBMIT SHOP DRAWINGS. SEE SHEET L-L501 DETAIL K
IM-110	ASPHALT TRAIL OR ACCESS DEIVE, SEE SHEET L-L501 DETAIL I
IM-121	8 FOOT WIDE CONCRETE TRAIL, SEE SHEET L-L501 DETAIL J

SCALE & NORTH ARROW

D

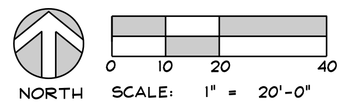

KEYPLAN

E

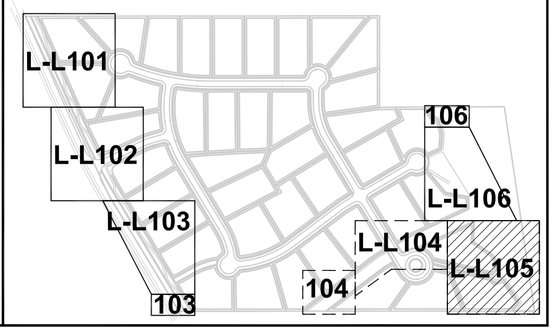

Arc Sitio Design, Inc
Landscape Architecture & Architectural Site Design
1058 East 2100 South
Salt Lake City, Utah 84106
office 801 . 487 . 4923
fax 801 . 466 . 3046
www.arcsitiodesign.com

consultant:

project

Sail House Development

Saratoga Springs, UT

date

SEPTEMBER 22, 2014

revisions

data

asd project no: 14027

title

SCHEMATIC PLANTING PLAN

sheet

L-L105

File : E:\14027_Sail House\Cadd\Planting.dwg Sep 22, 2014 - 9:41am

PLANTING PLAN G

MATCHLINE: SEE SHT L-L106 DETAIL H

IM-101
IM-102
IM-106
IM-108
IM-102
IM-110
IM-101
IM-108
IM-110
IM-106
IM-101
IM-110

16

17

MATCHLINE: SEE SHEET L-104

MATCHLINE: SEE SHEET L-105

PLANTING PLAN H

UTAH LAKE

IM-108
IM-110
IM-101

MATCHLINE: SEE SHT L-L106 DETAIL G

UTAH LAKE

PLANT SCHEDULE A

TREES	BOTANICAL NAME	COMMON NAME	CONT	CAL	QTY*
	Acer freemanii 'Jeffersred'	Autumn Blaze Maple	B & B	2.5"	2
	Fraxinus pennsylvanica 'Autumn Purple'	Autumn Purple Ash	B & B	2.5"	6
	Malus x 'Prairie Rose'	Prairie Rose Crab Apple	B & B	2.5"	10
	Picea glauca densata	Black Hills Spruce	B & B	6'H	1
	Ulmus parvifolia	Lacebark Elm	B & B	2.5"	31

SHRUBS	BOTANICAL NAME	COMMON NAME	SIZE	QTY
bd	Buddleia x 'Tutti Frutti'	Tutti Frutti Butterfly Bush	5 gal	124
sw	Cornus sericea 'Arctic Fire'	Arctic Fire Dwarf Dogwood	5 gal	54
J	Juniperus chinensis 'Sea Green'	Sea Green Juniper	5 gal	74
p	Physocarpus opulifolius	Ninebark	5 gal	28
p	Physocarpus opulifolius 'Lemon Candy'	Lemon Candy Dwarf Ninebark	5 gal	97
grx	Rhus aromatica 'Gro Low'	Skunkbush Sumac	5 gal	57
glab	Rhus glabra	Smooth Sumac	5 gal	36
S	Sambucus caerulea	Blue Elderberry	5 gal	13
symt	Symphoricarpos albus	Common White Snowberry	5 gal	57

GROUND COVERS	BOTANICAL NAME	COMMON NAME	CONT	QTY
	Detention Seed Mix See Sht. L-L501 Dtl. K	Detention Seed Mix	seed	40,545 sf
	Poa pratensis	Turf-Grass	sod	27,958 sf
	Slope Stabilization Seed Mix See Sht. L-L501 Dtl. L	Slope Stabilization Seed Mix	seed	170,665 sf

* QUANTITY INFORMATION PROVIDED FOR REFERENCE ONLY. CONTRACTOR RESPONSIBLE TO VERIFY ALL QUANTITIES.

PLANTING NOTES B

1. CONTRACTOR SHALL BE RESPONSIBLE FOR MAKING HIMSELF FAMILIAR WITH ALL UNDERGROUND UTILITIES, PIPES AND STRUCTURES. CONTRACTOR SHALL TAKE SOLE RESPONSIBILITY FOR ANY COSTS INCURRED DUE TO DAMAGE OF SAID UTILITIES.
2. CONTRACTOR SHALL NOT WILLFULLY PROCEED WITH CONSTRUCTION AS DESIGNED WHEN IT IS OBVIOUS THAT OBSTRUCTIONS AND/OR GRADE DIFFERENCES EXIST THAT MAY NOT HAVE BEEN KNOWN DURING DESIGN. SUCH CONDITIONS SHALL BE IMMEDIATELY BROUGHT TO THE ATTENTION OF THE OWNERS REP. THE CONTRACTOR SHALL ASSUME FULL RESPONSIBILITY FOR ALL NECESSARY REVISIONS DUE TO FAILURE TO GIVE SUCH NOTIFICATION.
3. CONTRACTOR SHALL BE RESPONSIBLE FOR ANY COORDINATION WITH SUBCONTRACTORS AS REQUIRED TO ACCOMPLISH THE LANDSCAPE CONSTRUCTION FOR THIS PROJECT.
4. ALL PLANT MATERIAL SHALL BE APPROVED BY THE OWNER'S REPRESENTATIVE UPON DELIVERY TO THE SITE, AND PRIOR TO INSTALLATION. ANY PROPOSED SUBSTITUTIONS OF PLANT SPECIES SHALL BE MADE WITH PLANTS OF EQUIVALENT OVERALL FORM, HEIGHT, BRANCHING HABIT, FLOWER, LEAF, COLOR, FRUIT AND CULTURE ONLY AS APPROVED BY THE OWNER'S REPRESENTATIVE.
5. THE CONTRACTOR SHALL SUPPLY ALL PLANT MATERIAL IN QUANTITIES SUFFICIENT TO COMPLETE THE PLANTING SHOWN ON THE DRAWINGS. IF DISCREPANCIES ARISE BETWEEN ACTUAL PLANTING AREA SIZES IN THE FIELD AND THOSE SHOWN ON THE PLANS, CONTRACTOR SHALL CONTACT THE OWNER'S REPRESENTATIVE FOR RESOLUTION. FAILURE TO MAKE SUCH CONFLICTS KNOWN WILL RESULT IN CONTRACTOR'S LIABILITY FOR MATERIALS RELOCATION.
6. FINAL LOCATIONS OF ALL PLANT MATERIALS SHALL BE SUBJECT TO APPROVAL OF THE OWNER'S REPRESENTATIVE. TREES SHALL NOT BE PLANTED LESS THAN 5'-0" FROM CURBS OR HARD SURFACE AREAS UNLESS A ROOT BARRIER IS INSTALLED.
7. CONTRACTOR SHALL PROVIDE SOIL ANALYSIS AND AMMEND SOIL AS RECOMMENDED. LANDSCAPE CONTRACTOR IS RESPONSIBLE FOR THE LAST 7 INCHES OF GRADE IN TURF SOD AREAS (6 INCHES OF TOPSOIL AND 1 INCH FOR SOD) AND 15 INCHES IN SHRUB BED AREAS (3 INCHES OF BARK MULCH AND 12" OF AMENDED TOPSOIL). IF NECESSARY DIG SUBGRADE IN SHRUB BEDS AND TURF AREAS DOWN AS SPECIFIED BEFORE PLACING AMENDED TOPSOIL. THE PLANTING ISLANDS IN THE PARKING LOTS SHALL HAVE ALL ROAD BASE REMOVED PRIOR TO PLACEMENT OF TOPSOIL. REFER TO GRADING PLAN FOR FINISH GRADE AND DRAINAGE.

REFERENCE SCHEDULE NOTES C

SYMBOL	SITE IMPROVEMENTS DESCRIPTION
IM-101	6' TALL SEMI PRIVATE VINYL FENCE, BEIGE, SEE SHEET L-L501 DETAILS G AND H. FENCE TO BE INSTALLED BY DEVELOPER, TYP.
IM-102	REDUCE HEIGHT OF VINYL FENCE TO 3 FEET TALL FROM SIDEWALK TO 25 FEET BACK INTO PROPERTY, TYP.
IM-103	LIMIT OF WORK LINE, TYP.
IM-106	INSTALL CONCRETE MOW CURB 6" WIDE, TYP. SEE SHEET L-L501 DETAIL D
IM-107	INSTALL 1" TO 3" ROUND TAN ROCK MULCH TO A DEPTH OF 4" IN 1' WIDE STRIP, TYP.
IM-108	INSTALL BENCH, TYP. REFER TO SHT L-L502 DTL A.
IM-109	6' TALL WROUGHT IRON STYLE FENCE WITH MASONRY PILLARS EVERY 50 FEET TO MATCH CITY OF SARATOGA SPRINGS REDWOOD ROAD TRAIL CORRIDOR SEMI-PRIVATE FENCE. FENCE TO BE INSTALLED BY DEVELOPER. CONTRACTOR TO FIELD VERIFY AND SUBMIT SHOP DRAWINGS. SEE SHEET L-L501 DETAIL K
IM-110	ASPHALT TRAIL OR ACCESS DEIVE, SEE SHEET L-L501 DETAIL I
IM-121	8 FOOT WIDE CONCRETE TRAIL, SEE SHEET L-L501 DETAIL J

SCALE & NORTH ARROW D

NORTH

0 10 20 40

SCALE: 1" = 20'-0"

KEYPLAN E

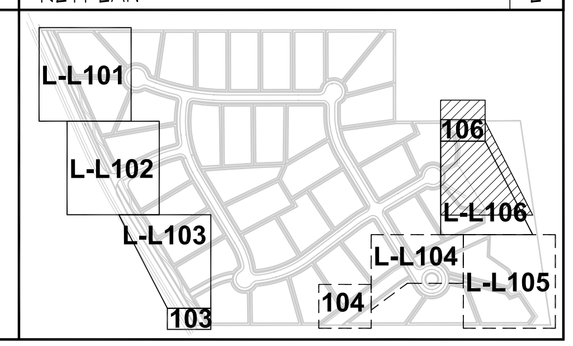

Arc Sitio Design, Inc
Landscape Architecture & Architectural Site Design

1058 East 2100 South
Salt Lake City, Utah 84106
office 801 . 487 . 4923
fax 801 . 466 . 3046
www.arcsitiodesign.com

consultant:

project

Sail House Development

Saratoga Springs, UT

date

SEPTEMBER 22, 2014

revisions

data

asd project no: 14027

title

SCHEMATIC PLANTING PLAN

sheet

L-L106

File : E:\14027_Soil House\Cadd\Planting.dwg Sep 22, 2014 - 9:40am

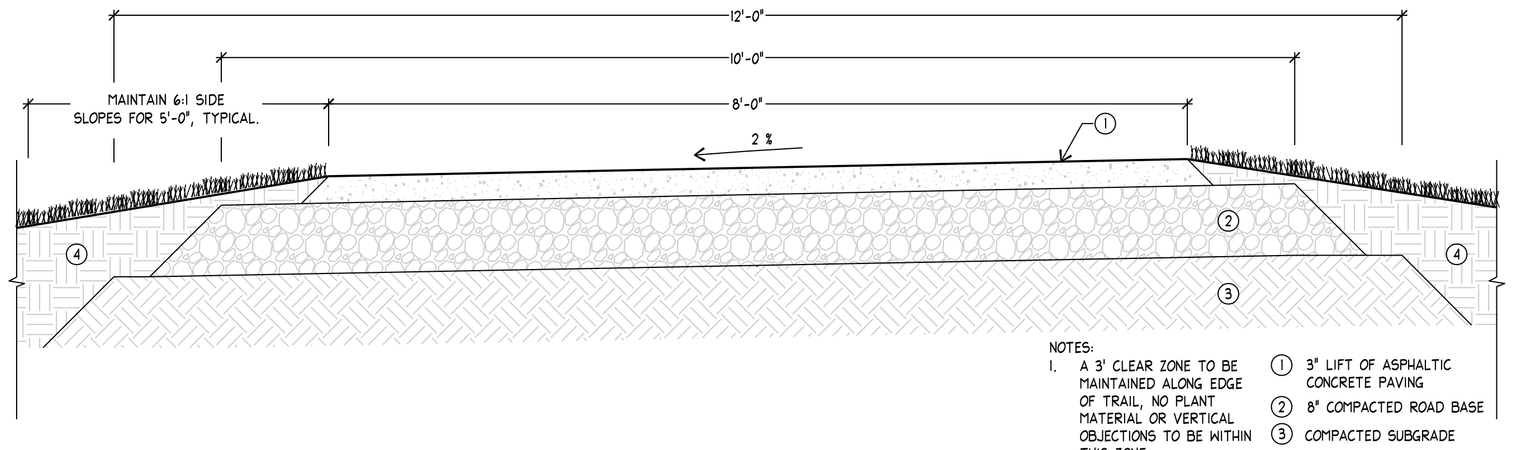

NOTES:
1. A 3' CLEAR ZONE TO BE MAINTAINED ALONG EDGE OF TRAIL, NO PLANT MATERIAL OR VERTICAL OBJECTIONS TO BE WITHIN THIS ZONE.

1. 3" LIFT OF ASPHALTIC CONCRETE PAVING
2. 8" COMPACTED ROAD BASE
3. COMPACTED SUBGRADE
4. TOPSOIL BORROW

I 8' ASPHALT TRAIL
SCALE: NTS — SECTION

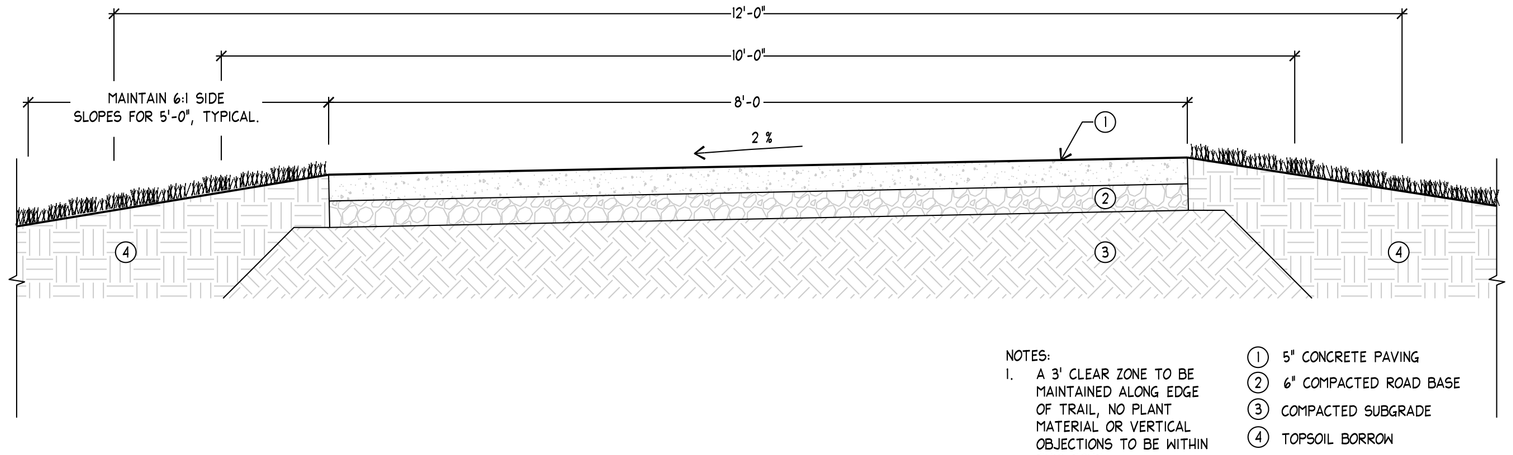

NOTES:
1. A 3' CLEAR ZONE TO BE MAINTAINED ALONG EDGE OF TRAIL, NO PLANT MATERIAL OR VERTICAL OBJECTIONS TO BE WITHIN THIS ZONE.

1. 5" CONCRETE PAVING
2. 6" COMPACTED ROAD BASE
3. COMPACTED SUBGRADE
4. TOPSOIL BORROW

J 8' CONCRETE TRAIL
SCALE: NTS — SECTION

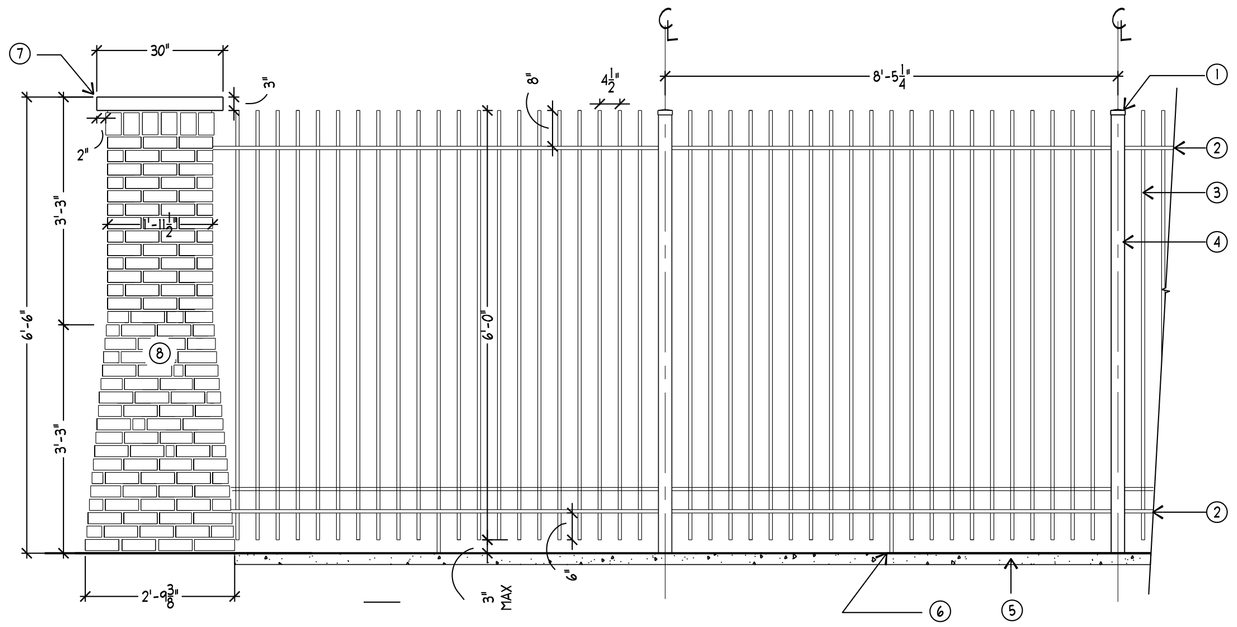

1. POST CAP, TYP.
2. HEADER OR STRINGER, TYP.- 1" X 1-1/2"
3. 3/4" SQUARE PICKETS (OVA), TYP.
4. 3"x3" POST, TYP.
5. CONCRETE MOW CURB UNDER FENCE, SEE SHT L-L501 DTL H
6. 3/4" SQUARE PICKETS ANCHOR, TYP.
7. PRECAST CONCRETE CAP, TYP.
8. BRICK, CONTRACTOR TO PROVIDE SAMPLE FOR OWNER AND ARCHITECT TO APPROVE TYP.

K BRICK COLUMN AND IRON FENCE
SCALE: NTS — ELEVATION

10 lbs per acre Western Wheatgrass	(Pascopyrum smithii)
6 lbs per acre Streambank Wheatgrass	(Elymus lanceolatus ssp. psammophilus)
.25 lbs per acre Lewis Flax	(Linum lewisii)
.01 lbs per acre Western Yarrow	(Achillea millefolium var. occidentalis)

NOTES:
1. THE DRILL SEEDING RATE IS 16.26 POUNDS PER ACRE
2. REFER TO CIVIL DRAWINGS FOR INSTALLATION METHOD
3. THE PERCENTAGES ARE BY WEIGHT, THE MIX IS BASED UPON SEED COUNT FOR EACH SPECIES.

CONTACT: GRANITE SEED COMPANY 1697 WEST 2100 NORTH LEHI, UT 84043
(801) 768-4422
GRANITE@GRANITESEED.COM

L DETENTION SEED MIX
SCALE: NTS — SECTION

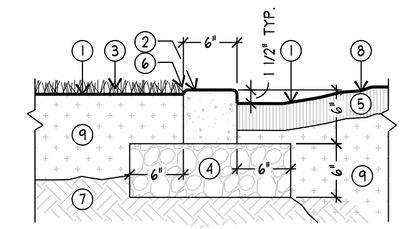

NOTE:
1. WHEN MOW CURB IS ADJACENT TO BUILDING OR WALL, USE EXPANSION JOINT AND SLOPE 2% AWAY FROM BUILDING.
2. EXPANSION JOINTS AT 20' O.C. AND A TOOLED JOINT AT 10' O.C.

1. FINISH GRADE
2. CONCRETE MOW CURB. FINISH W/ MED. BROOM PERPENDICULAR TO HEADER RUN.
3. TURF
4. 4"-THICK COMPACTED ROADBASE
5. MULCH - SEE SPECS
6. 1/4" RADIUS, TYPICAL
7. COMPACTED SUBGRADE
8. SHRUB BED
9. AMENDED TOPSOIL - SEE SPECS

D CONCRETE MOW CURB - 6" WIDE
SCALE: NTS — SECTION

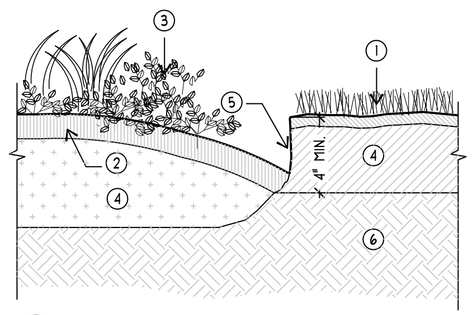

1. GRASS OR TURF
2. MULCH AS SPECIFIED
3. SHURB BED
4. TOPSOIL LAYER
5. SHOVEL EDGE
6. SUBGRADE

E SHOVEL TURF EDGE
SCALE: NTS — SECTION

NOTES:
1. PLANT SHRUB PLUMB.
2. PRUNE DEAD, DISEASED, DAMAGED, OR RUBBING BRANCHES AT PLANTING TIME. DO NOT PRUNE LEADER.
3. REMOVE ALL LABELS, WIRES, ETC. FROM SHRUB.

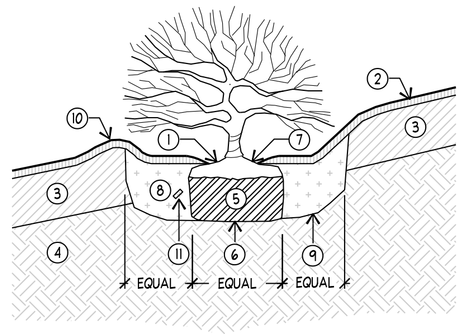

1. MULCH 1" TO 2" BACK FROM TRUNK
2. MULCH - SEE SPECS.
3. AMENDED TOPSOIL - SEE SPECS
4. UNDISTURBED SUBGRADE
5. IF THE SHRUB IS BALLED AND BURLAPPED (OR CONTAINED IN A WIRE BASKET), CUT AND REMOVE THE ROPE, STRING, WIRE, AND/OR WIRE BASKET FROM AROUND THE TRUNK AND TOP 1/3 OF THE ROOT BALL
6. SET ROOTBALL ON UNDISTURBED SUBGRADE
7. TRUNK FLAIR- SET 1" TO 2" ABOVE FINISH GRADE
8. MAKE THE HOLE WIDE, AS MUCH AS THREE TIMES THE DIAMETER OF THE ROOT BALL, BUT ONLY AS DEEP AS THE ROOT BALL. BACKFILL WITH 1/2 TOPSOIL BORROW FROM PIT AND 1/2 AMENDED TOPSOIL - SEE NOTES SHT. L-L101 DTL. G
9. ROUGHEN SIDES PRIOR TO BACKFILLING. SETTLE W/ WATER IN 12" LIFTS
10. FORM WELL AT EACH PLANT USING TOPSOIL
11. FERTILIZER TABLET - SEE SPECS.

F SHRUB/GRASS
SCALE: NTS — SECTION

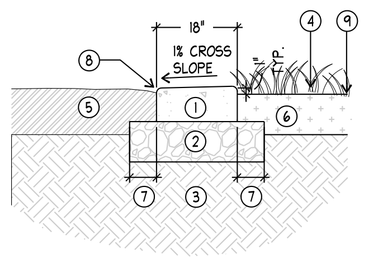

1. 5"-THICK CONCRETE MOW CURB
2. 4"-THICK COMPACTED ROADBASE
3. COMPACTED SUBGRADE
4. TURF OR SEED MIX, SEE PLANTING PLAN
5. PLANTING BED WITH MULCH, SEE PLANTING PLAN
6. AMENDED TOPSOIL - SEE SPECS.
7. EXTEND COMPACTED ROADBASE MIN. 4" BEYOND MOW CURB
8. EDGES 1/2" RADIUS , TYP.
9. FINISHED GRADE, SEE GRADING PLAN

G CONCRETE MOW CURB FENCE SECTION DETAIL
SCALE: NTS — SECTION

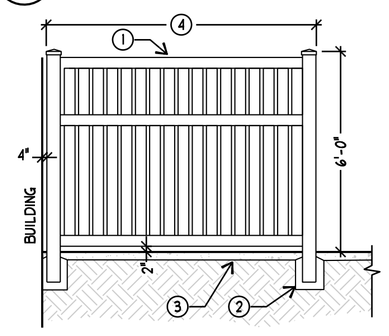

1. SEMI-PRIVATE VINYL FENCE, BEIGE
2. CONCRETE FOOTING PER MANUFACTURER'S SPECS., TYP.
3. CONCRETE MOW CURB, SEE SHT L-L501 DTL H
4. LENGTH VARIES - INSTALL PER MANUFACTURER'S RECOMMENDATIONS

NOTE:
1. INSTALLATION TO BE COMPLETED IN ACCORDANCE WITH MANUFACTURER'S SPECIFICATIONS.
2. TO BE USED WITHIN ALL SIGHT TRIANGLES

H SEMI-PRIVATE VINYL FENCE
SCALE: NTS — SECTION

NOTES:
1. PLANT TREE PLUMB.
2. PRUNE DEAD, DISEASED, DAMAGED, OR RUBBING BRANCHES AT PLANTING TIME.
3. REMOVE ALL LABELS, WIRES, ETC.

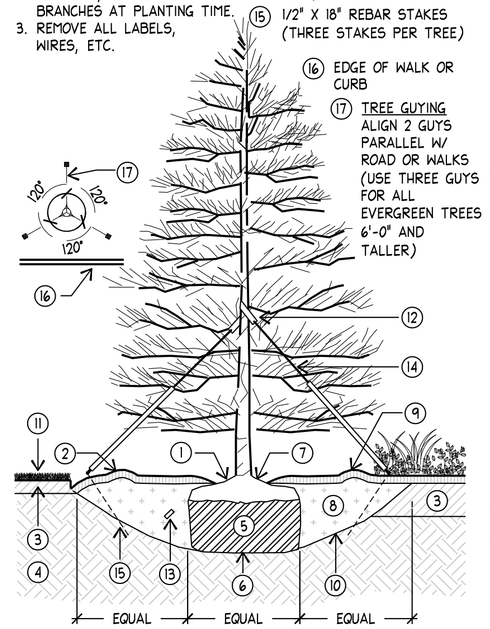

14. DOUBLE STRAND PLIABLE NO. 10-GAGE GALVANIZED STEEL WIRE OR VINYL-COATED STEEL WIRE, DO NOT PULL TAUT
15. 1/2" X 18" REBAR STAKES (THREE STAKES PER TREE)
16. EDGE OF WALK OR CURB
17. TREE GUYING ALIGN 2 GUYS PARALLEL W/ ROAD OR WALKS (USE THREE GUYS FOR ALL EVERGREEN TREES 6'-0" AND TALLER)

1. MULCH 1" TO 2" BACK FROM TRUNK
2. MULCH - SEE SPECS.
3. AMENDED TOPSOIL - SEE SPECS
4. UNDISTURBED SUBGRADE
5. IF THE TREE IS BALLED AND BURLAPPED (OR CONTAINED IN A WIRE BASKET), CUT AND REMOVE THE ROPE, STRING, WIRE, AND/OR WIRE BASKET FROM AROUND THE TRUNK AND TOP 1/3 OF THE ROOT BALL
6. SET ROOTBALL ON UNDISTURBED SUBGRADE
7. TRUNK FLAIR- SET 1" TO 2" ABOVE FINISH GRADE
8. MAKE THE HOLE WIDE, AS MUCH AS THREE TIMES THE DIAMETER OF THE ROOT BALL, BUT ONLY AS DEEP AS THE ROOT BALL. BACKFILL WITH 1/2 TOPSOIL BORROW FROM PIT AND 1/2 AMENDED TOPSOIL - SEE NOTES SHT. L-L101 DTL. G
9. REMOVE SOD AT DRIPLINE OF TREE TO FORM TREE WELL OR A MIN. WIDTH OF 3'-0" DIA.
10. ROUGHEN SIDES PRIOR TO BACKFILLING. SETTLE W/ WATER IN 12" LIFTS
11. DO NOT PLANT LAWN IN TREE PIT
12. 3" OR WIDER NYLON WEBBING W/ METAL GROMMETS
13. FERTILIZER TABLET - SEE SPECS.

A EVERGREEN TREE WITH GUYING
SCALE: NTS — SECTION

NOTES:
1. PLANT TREE PLUMB.
2. PRUNE DEAD, DISEASED, DAMAGED, OR RUBBING BRANCHES AT PLANTING TIME. DO NOT PRUNE LEADER.
3. REMOVE ALL LABELS, WIRES, ETC. FROM THE TREE'S STEM.

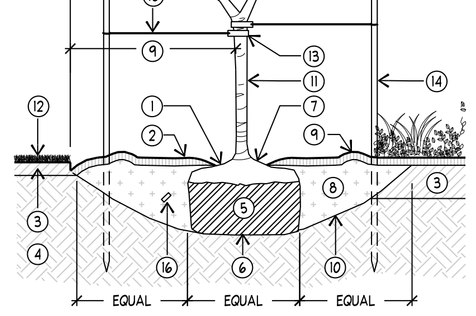

1. MULCH 1" TO 2" BACK FROM TRUNK
2. MULCH - SEE SPECS.
3. AMENDED TOPSOIL- SEE SPECS
4. UNDISTURBED SUBGRADE
5. IF THE TREE IS BALLED AND BURLAPPED (OR CONTAINED IN A WIRE BASKET), CUT AND REMOVE THE ROPE, STRING, WIRE, AND/OR WIRE BASKET FROM AROUND THE TRUNK AND TOP 1/3 OF THE ROOT BALL
6. SET ROOTBALL ON UNDISTURBED SUBGRADE
7. TRUNK FLAIR- SET 1" TO 2" ABOVE FINISH GRADE
8. MAKE THE HOLE WIDE, AS MUCH AS THREE TIMES THE DIAMETER OF THE ROOT BALL, BUT ONLY AS DEEP AS THE ROOT BALL. BACKFILL WITH 1/2 TOPSOIL BORROW FROM PIT AND 1/2 AMENDED TOPSOIL
9. REMOVE SOD AT DRIPLINE OF TREE TO FORM TREE WELL OR A MIN. WIDTH OF 3'-0" DIA.
10. ROUGHEN SIDES PRIOR TO BACKFILLING. SETTLE W/ WATER IN 12" LIFTS
11. IF PLANTED IN LATE FALL, WRAP TRUNK, STARTING AT THE BOTTOM TO THE FIRST SET OF BRANCHES. REMOVE THE WRAP SPRING, AFTER THE LAST FROST. ONLY WRAP IF SUN HITS ITS TRUNK IN WINTER.
12. DO NOT PLANT LAWN IN TREE PIT
13. 3" OR WIDER NYLON WEBBING W/ METAL GROMMETS
14. 6'-0" X 2" DIA. ROUND WOOD STAKES, TWO PER TREE (THE STAKES SHALL BE PLUMB AND SET AT THE SAME HIEGHT)
15. DOUBLE STRAND PLIABLE NO. 10-GAGE GALVANIZED STEEL WIRE OR VINYL-COATED STEEL WIRE, DO NOT PULL TAUT
16. FERTILIZER TABLET - SEE SPECS.
17. EDGE OF WALK OR CURB

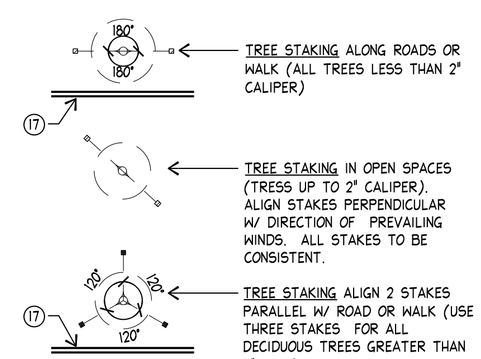

TREE STAKING ALONG ROADS OR WALK (ALL TREES LESS THAN 2" CALIPER)

TREE STAKING IN OPEN SPACES (TREES UP TO 2" CALIPER). ALIGN STAKES PERPENDICULAR W/ DIRECTION OF PREVAILING WINDS. ALL STAKES TO BE CONSISTENT.

TREE STAKING ALIGN 2 STAKES PARALLEL W/ ROAD OR WALK (USE THREE STAKES FOR ALL DECIDUOUS TREES GREATER THAN 2" CAL.)

B DECIDUOUS TREE WITH STAKING
SCALE: NTS — SECTION

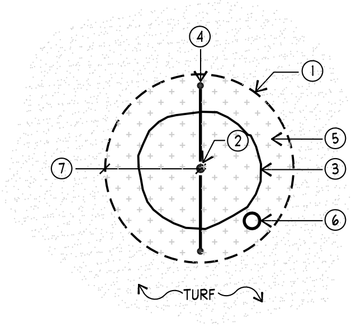

1. TURF EDGE
2. TREE TRUNK
3. ROOTBALL
4. STAKING SYSTEM- LOCATE STAKES WITHIN THE TURF EDGE
5. MULCH AS SPECIFIED
6. ACCENT LIGHTING- IF USED, LOCATE ACCENT LIGHTS WITHIN THE TURF EDGE
7. REMOVE SOD AT DRIPLINE OF TREE- MIN. WIDTH OF 3'-0" DIA.

C TREE IN TURF
SCALE: NTS — PLAN

Arc Sitio Design, Inc
Landscape Architecture & Architectural Site Design
1058 East 2100 South
Salt Lake City, Utah 84106
office 801 . 487 . 4923
fax 801 . 466 . 3046
www.arcsitiodesign.com

consultant:

project
Sail House Development
Saratoga Springs, UT

date
SEPTEMBER 22, 2014

revisions

data
asd project no: 14027

title
PLANTING DETAILS

sheet
L-L501

File : E:\14027_Sail House\Cadd\Planting.dwg Sep 22, 2014-9:40am

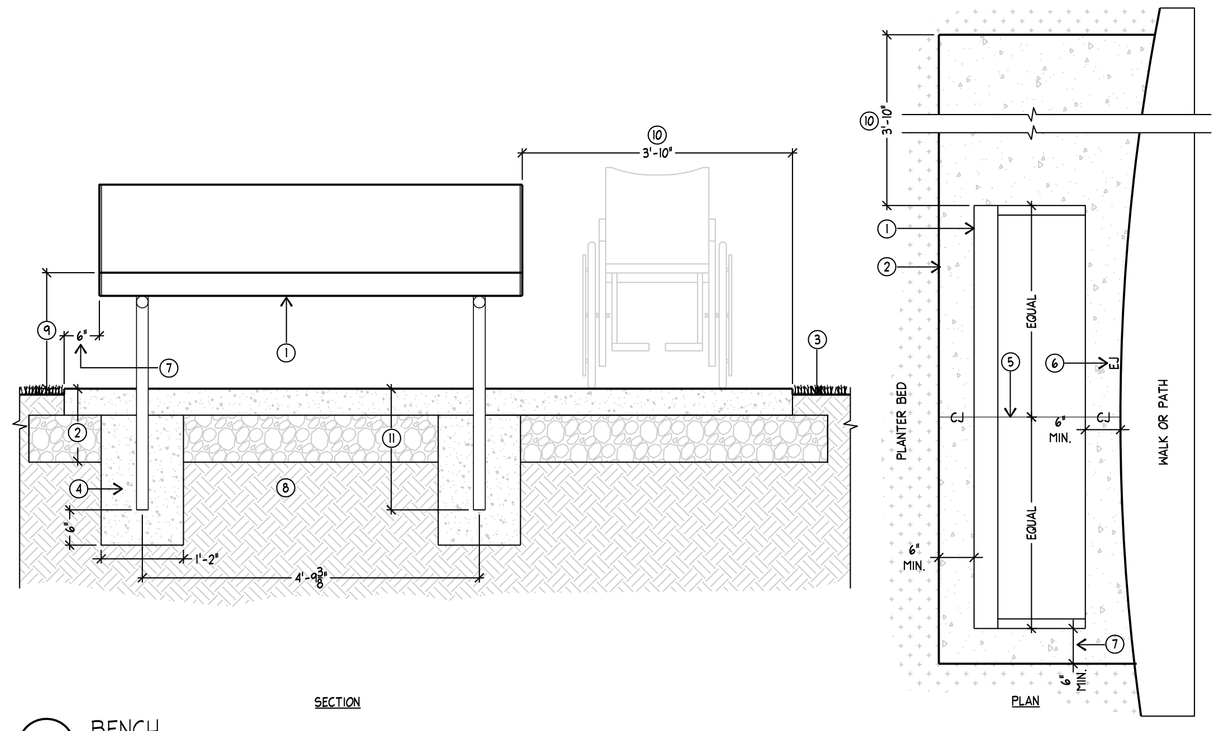

1. BENCH- SEE SPECIFICATIONS
2. CONCRETE PAVING OR STONE DUST PAVING
3. FINISH GRADE 1" BELOW PAVING
4. CONCRETE FOOTING PER MANUFACTURER'S SPECS., TYP.
5. CONTROL JOINT, TYP.
6. EXPANSION JOINT, TYP.
7. 6" MIN. DISTANCE- REFER TO THE PLANS FOR THE EXACT CONCRETE PAVING LAYOUT
8. COMPACTED SUBGRADE
9. BENCH HEIGHT PER CURRENT A.D.A. STANDARD
10. EXTEND BENCH PAD TO ACCOMODATE A.D.A. SEATING
11. EMBED DEPTH PER MANUFACTURER'S RECOMMENDATION

NOTE:
1. INSTALLATION TO BE COMPLETED IN ACCORDANCE WITH MANUFACTURER'S SPECIFICATIONS.

A BENCH

SCALE: NTS

SECTION/PLAN

Arc Sitio Design, Inc
Landscape Architecture & Architectural Site Design

1058 East 2100 South
Salt Lake City, Utah 84106
office 801 . 487 . 4923
fax 801 . 466 . 3046
www.arcsitiodesign.com

consultant:

project

Sail House Development
Saratoga Springs, UT

date
SEPTEMBER 22, 2014

revisions

data
asd project no: 14027

title
PLANTING DETAILS

sheet
L-L502

File : E:\14027_Sail House\Cadd\Planting.dwg Sep 22, 2014 - 9:40am

SCALE & NORTH ARROW | A

NORTH

0 50 100 200

SCALE: 1" = 100'-0"

Arc Sitio Design, Inc
Landscape Architecture & Architectural Site Design

1058 East 2100 South
Salt Lake City, Utah 84106
office 801 . 487 . 4923
fax 801 . 466 . 3046
www.arcsitiodesign.com

consultant:

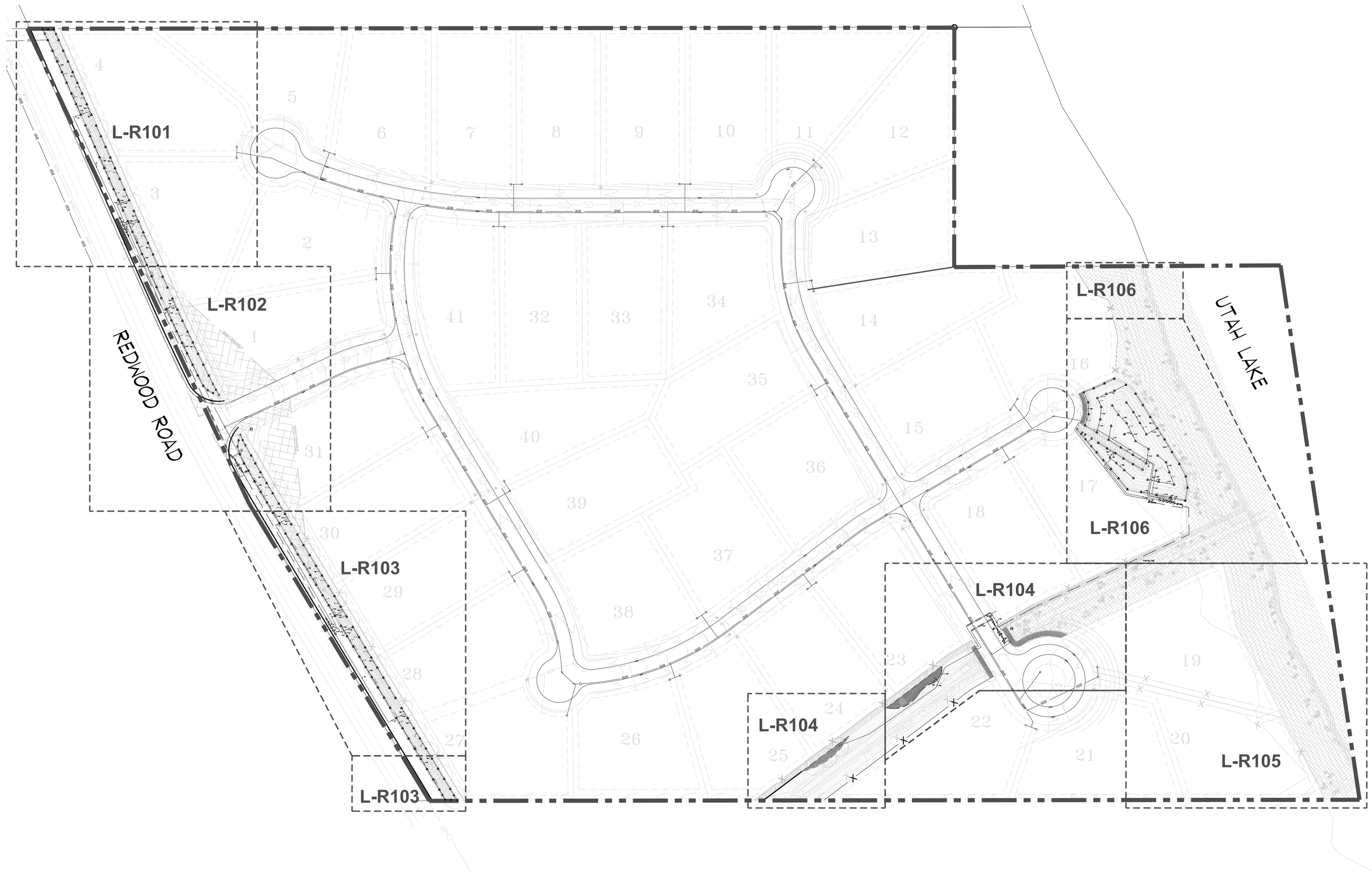

project

Sail House Development
Saratoga Springs, UT

date
SEPTEMBER 22, 2014

revisions

data
asd project no: 14027

title
OVERALL IRRIGATION PLAN

sheet
L-R100

File : E:\14027_Soil House\Cadd\irrigation.dwg Sep 22, 2014-11:37am

IRRIGATION PLAN — G

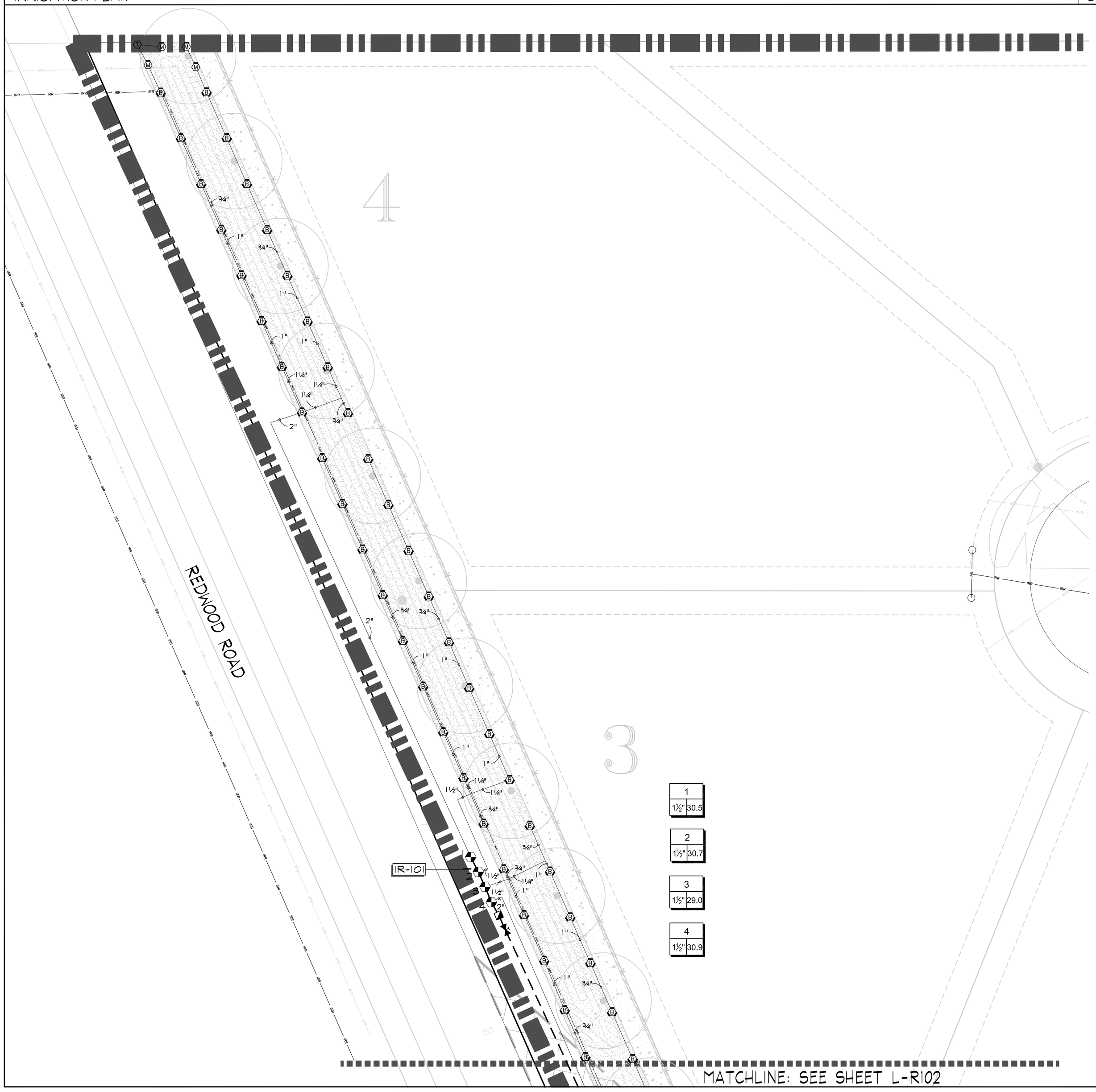

IRRIGATION SCHEDULE — A

* SEE SHEET L-R501 DETAIL 'A' FOR IRRIGATION SCHEDULE *

IRRIGATION NOTES — B

1. IT IS THE INTENT OF THESE IRRIGATION PLANS TO PROVIDE THE CONTRACTOR WITH CONSTRUCTION INFORMATION THAT WILL ENABLE HIM TO INSTALL A COMPLETE AND OPERATIONAL IRRIGATION SYSTEM.
2. THE CONTRACTOR SHALL VERIFY THE AVAILABLE WATER PRESSURE ON THE SITE PRIOR TO CONSTRUCTION. REPORT ANY DIFFERENCES BETWEEN THE WATER PRESSURE SHOWN ON THE DRAWINGS AND THE ACTUAL PRESSURE READINGS AT THE POINT OF CONNECTION. IN THE EVENT THE PRESSURE DIFFERENCES ARE NOT REPORTED PRIOR TO THE START OF CONSTRUCTION, THE CONTRACTOR SHALL ASSUME FULL RESPONSIBILITY FOR ANY REVISIONS NECESSARY. CONTRACTOR TO MAINTAIN OPERATING PRESSURE FOR EACH ZONE TO THE LAST HEAD.
3. IT IS THE RESPONSIBILITY OF THE CONTRACTOR TO FAMILIARIZE HIMSELF WITH ALL GRADE DIFFERENCES, LOCATION OF WALLS, STRUCTURES, WALKS, AND UTILITIES. THE IRRIGATION CONTRACTOR SHALL REPAIR OR REPLACE ALL ITEMS DAMAGED BY HIS WORK. HE SHALL COORDINATE HIS WORK WITH OTHER CONTRACTORS FOR THE LOCATION AND INSTALLATION OF PIPE SLEEVES AND LATERALS THROUGH WALLS AND UNDER PAVING.
4. DO NOT WILLFULLY INSTALL THE IRRIGATION SYSTEM AS SHOWN ON THE PLANS WHEN IT IS OBVIOUS IN THE FIELD THAT UNKNOWN OBSTRUCTIONS OR GRADING DIFFERENCES MAY NOT HAVE BEEN CONSIDERED IN THE ENGINEERING. SUCH OBSTRUCTIONS OR DIFFERENCES SHOULD BE BROUGHT TO THE ATTENTION OF THE LANDSCAPE ARCHITECT. IN THE EVENT THAT THIS NOTIFICATION IS NOT PERFORMED, THE CONTRACTOR SHALL ASSUME FULL RESPONSIBILITY FOR ANY REVISIONS NECESSARY.
5. THIS DESIGN IS DIAGRAMMATIC, ALL IRRIGATION EQUIPMENT SHOWN WITHIN PAVED AREAS ARE FOR DESIGN CLARIFICATION ONLY AND SHALL BE INSTALLED IN PLANTING AREAS WHEREVER POSSIBLE.
6. THE CONTRACTOR SHALL BE RESPONSIBLE FOR REPAIRING AND/OR REPLACING ANY SITE ITEM DAMAGED DURING THE COURSE OF CONSTRUCTION.
7. THE CONTRACTOR SHALL FLUSH AND ADJUST ALL SPRINKLER HEADS AND VALVES FOR OPTIMUM COVERAGE. INSTALL ALL SPRINKLER HEADS WITH NOZZLES OF THE APPROPRIATE DEGREE AND RADIUS FOR THE AREA TO BE COVERED. ADJUST ALL NOZZLES TO ELIMINATE SPRAYING ONTO WALKS, BUILDINGS, ETC.
8. ALL PIPE INSTALLED IN PAVING SHALL BE SLEEVED PER THE LEGEND.
9. INSTALL CHECK VALVE PER LEGEND AS NEEDED TO PREVENT HEAD DRAINAGE FROM BUBBLING, SPRAY HEADS AND DRIP EMITTERS. DIAMETER.
10. MINIMUM SIZE PIPE ON ANY CIRCUIT IS 3/4"
11. CONTRACTOR TO INSTALL MANUAL DRAIN VALVES AT ALL LOW POINTS ON MAINLINE - SEE SHEET L.R502 DETAIL H.
12. PROVIDE AND INSTALL ALL THE MANUFACTURER'S RECOMMENDED SURGE AND LIGHTNING PROTECTION EQUIPMENT ON CONTROLLERS.
13. ALIGN VALVE BOXES WITHIN PLANTING BEDS AND EDGE OF PAVEMENT, TYP.

IRRIGATION REFERENCE NOTES — C

SYMBOL	IRRIGATION DESCRIPTION
IR-101	IRRIGATION EQUIPMENT SHOWN OUTSIDE PLANTING AREAS FOR GRAPHIC CLARITY ONLY. EQUIPMENT SHALL BE LOCATED INSIDE PLANTING AREAS AND VALVE BOXES SHALL BE ALIGNED WITH PLANTING BEDS AND EDGE OF PAVEMENT, TYP.
IR-102	VERIFY P.O.C IN THE FIELD, SEE CIVIL PLANS FOR WATER METER LOCATION. P.O.C. TO BE 1 1/2 INCHES.
IR-103	PEDESTAL MOUNT CONTROLLER, COORDINATE WITH ELECTRICAL CONNECTIONS FOR 120V POWER. POWER MUST BE METERED FOR ALL CONTROLLERS.
IR-104	RAIN SENSOR, SEE SHEET L.R502 DETAIL B
IR-105	EXISTING SECONDARY IRRIGATION WATER SUPPLY, SEE CIVIL PLANS FOR DETAILS.
IR-106	1 1/2 INCH P.O.C. NOT USED IN CURRENT IRRIGATION PLANS; FOR FUTURE USE ONLY.

CRITICAL ANALYSIS — D

Generated:	2014-06-11	Generated:	2014-08-13
P.O.C. NUMBER:01		P.O.C. NUMBER:02	
Water Source Information:		Water Source Information:	
FLOW AVAILABLE		FLOW AVAILABLE	
Point of Connection Size:	1-1/2"	Point of Connection Size:	1-1/2"
Flow Available:	47.66 gpm	Flow Available:	47.66 gpm
PRESSURE AVAILABLE		PRESSURE AVAILABLE	
Static Pressure at POC:	50.00 psi	Static Pressure at POC:	100.00 psi
Pressure Available:	50.00 psi	Pressure Available:	100.00 psi
DESIGN ANALYSIS		DESIGN ANALYSIS	
Maximum Station Flow:	34.50 gpm	Maximum Station Flow:	7.16 gpm
Flow Available at POC:	47.66 gpm	Flow Available at POC:	47.66 gpm
Residual Flow Available:	13.16 gpm	Residual Flow Available:	40.50 gpm
Critical Station:	7	Critical Station:	12
Design Pressure:	30.00 psi	Design Pressure:	30.00 psi
Elevation Loss:	0.00 psi	Elevation Loss:	0.00 psi
Friction Loss:	5.76 psi	Friction Loss:	4.32 psi
Fittings Loss:	0.58 psi	Fittings Loss:	0.48 psi
Loss through Valve:	3.56 psi	Loss through Valve:	2.37 psi
Pressure Req. at Critical Station:	39.88 psi	Pressure Req. at Critical Station:	37.12 psi
Loss for Fittings:	0.36 psi	Loss for Fittings:	0.00 psi
Loss for Main Line:	3.58 psi	Loss for Main Line:	0.02 psi
Loss for POC to Valve Elevation:	0.00 psi	Loss for POC to Valve Elevation:	0.00 psi
Loss for Backflow:	0.00 psi	Loss for Backflow:	0.00 psi
Loss for Master Valve:	3.56 psi	Loss for Master Valve:	3.90 psi
Critical Station Pressure at POC:	47.38 psi	Critical Station Pressure at POC:	41.04 psi
Pressure Available:	50.00 psi	Pressure Available:	100.00 psi
Residual Pressure Available:	2.62 psi	Residual Pressure Available:	58.96 psi

SCALE & N. ARROW — F

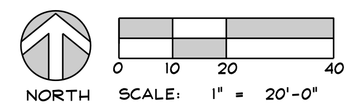

KEYPLAN — E

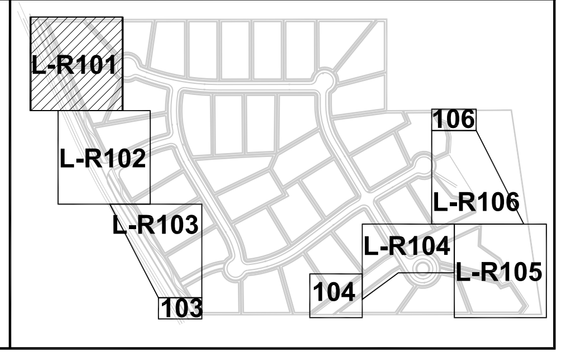

ArcSitio Design, Inc
Landscape Architecture & Architectural Site Design
1058 East 2100 South
Salt Lake City, Utah 84106
office 801 . 487 . 4923
fax 801 . 466 . 3046
www.arcsitiodesign.com

consultant:

project
Sail House Development
Saratoga Springs, UT

date
SEPTEMBER 22, 2014

revisions

data
asd project no: 14027

title
IRRIGATION PLAN

sheet
L-R101

File : E:\14027_Sail House\Cadd\irrigation.dwg Sep 22, 2014 - 11:36am

IRRIGATION PLAN — G

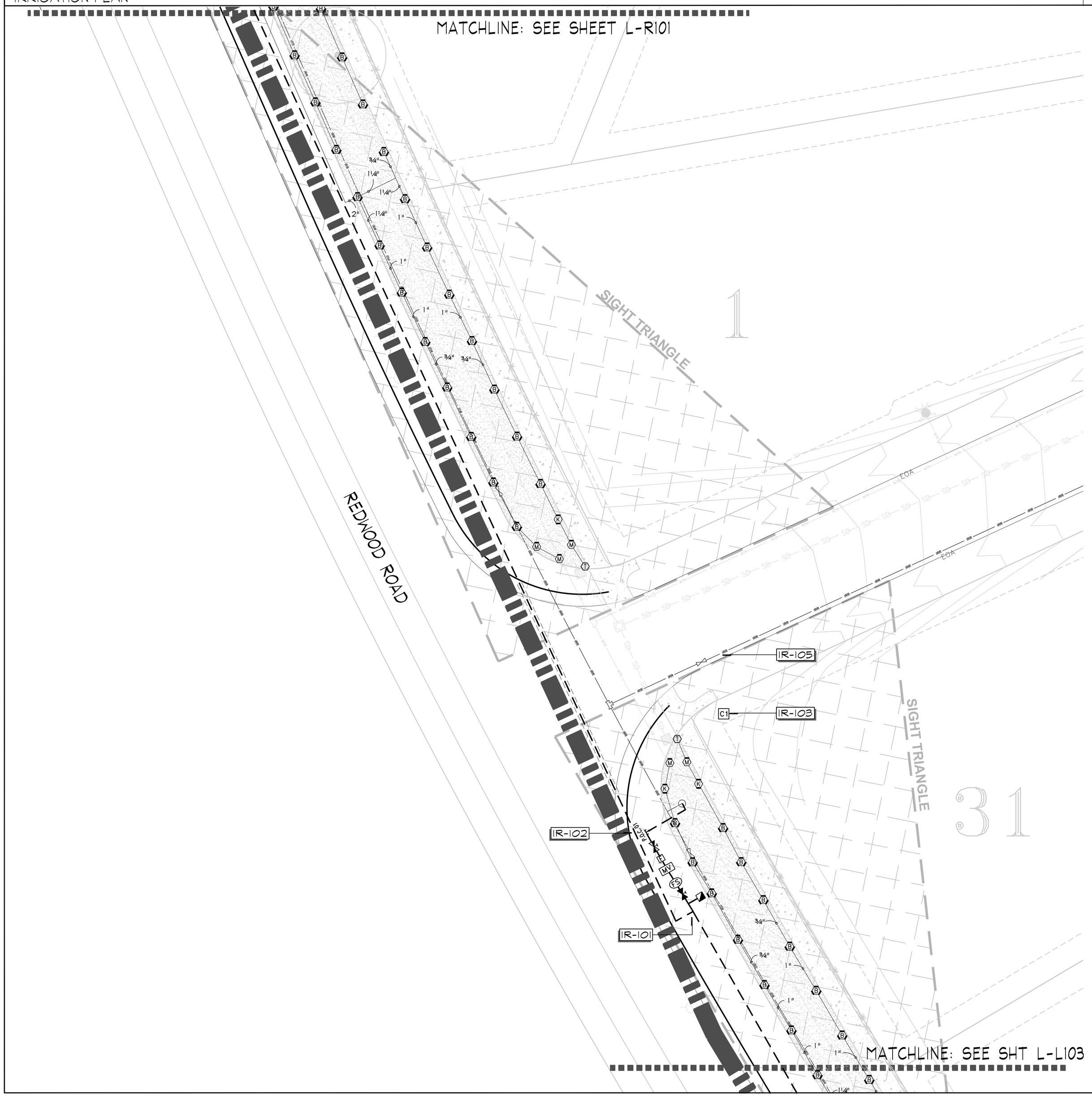

IRRIGATION SCHEDULE — A

* SEE SHEET L-R501 DETAIL 'A' FOR IRRIGATION SCHEDULE *

IRRIGATION NOTES — B

1. IT IS THE INTENT OF THESE IRRIGATION PLANS TO PROVIDE THE CONTRACTOR WITH CONSTRUCTION INFORMATION THAT WILL ENABLE HIM TO INSTALL A COMPLETE AND OPERATIONAL IRRIGATION SYSTEM.
2. THE CONTRACTOR SHALL VERIFY THE AVAILABLE WATER PRESSURE ON THE SITE PRIOR TO CONSTRUCTION. REPORT ANY DIFFERENCES BETWEEN THE WATER PRESSURE SHOWN ON THE DRAWINGS AND THE ACTUAL PRESSURE READINGS AT THE POINT OF CONNECTION. IN THE EVENT THE PRESSURE DIFFERENCES ARE NOT REPORTED PRIOR TO THE START OF CONSTRUCTION, THE CONTRACTOR SHALL ASSUME FULL RESPONSIBILITY FOR ANY REVISIONS NECESSARY. CONTRACTOR TO MAINTAIN OPERATING PRESSURE FOR EACH ZONE TO THE LAST HEAD.
3. IT IS THE RESPONSIBILITY OF THE CONTRACTOR TO FAMILIARIZE HIMSELF WITH ALL GRADE DIFFERENCES, LOCATION OF WALLS, STRUCTURES, WALKS, AND UTILITIES. THE IRRIGATION CONTRACTOR SHALL REPAIR OR REPLACE ALL ITEMS DAMAGED BY HIS WORK, HE SHALL COORDINATE HIS WORK WITH OTHER CONTRACTORS FOR THE LOCATION AND INSTALLATION OF PIPE SLEEVES AND LATERALS THROUGH WALLS AND UNDER PAVING.
4. DO NOT WILLFULLY INSTALL THE IRRIGATION SYSTEM AS SHOWN ON THE PLANS WHEN IT IS OBVIOUS IN THE FIELD THAT UNKNOWN OBSTRUCTIONS OR GRADING DIFFERENCES MAY NOT HAVE BEEN CONSIDERED IN THE ENGINEERING. SUCH OBSTRUCTIONS OR DIFFERENCES SHOULD BE BROUGHT TO THE ATTENTION OF THE LANDSCAPE ARCHITECT. IN THE EVENT THAT THIS NOTIFICATION IS NOT PERFORMED, THE CONTRACTOR SHALL ASSUME FULL RESPONSIBILITY FOR ANY REVISIONS NECESSARY.
5. THIS DESIGN IS DIAGRAMMATIC, ALL IRRIGATION EQUIPMENT SHOWN WITHIN PAVED AREAS ARE FOR DESIGN CLARIFICATION ONLY AND SHALL BE INSTALLED IN PLANTING AREAS WHEREVER POSSIBLE.
6. THE CONTRACTOR SHALL BE RESPONSIBLE FOR REPAIRING AND/OR REPLACING ANY SITE ITEM DAMAGED DURING THE COURSE OF CONSTRUCTION.
7. THE CONTRACTOR SHALL FLUSH AND ADJUST ALL SPRINKLER HEADS AND VALVES FOR OPTIMUM COVERAGE. INSTALL ALL SPRINKLER HEADS WITH NOZZLES OF THE APPROPRIATE DEGREE AND RADIUS FOR THE AREA TO BE COVERED. ADJUST ALL NOZZLES TO ELIMINATE SPRAYING ONTO WALKS, BUILDINGS, ETC.
8. ALL PIPE INSTALLED IN PAVING SHALL BE SLEEVED PER THE LEGEND.
9. INSTALL CHECK VALVE PER LEGEND AS NEEDED TO PREVENT HEAD DRAINAGE FROM BUBBLING, SPRAY HEADS AND DRIP EMITTERS. DIAMETER.
10. MINIMUM SIZE PIPE ON ANY CIRCUIT IS 3/4"
11. CONTRACTOR TO INSTALL MANUAL DRAIN VALVES AT ALL LOW POINTS ON MAINLINE - SEE SHEET L.R502 DETAIL H.
12. PROVIDE AND INSTALL ALL THE MANUFACTURER'S RECOMMENDED SURGE AND LIGHTNING PROTECTION EQUIPMENT ON CONTROLLERS.
13. ALIGN VALVE BOXES WITHIN PLANTING BEDS AND EDGE OF PAVEMENT, TYP.

IRRIGATION REFERENCE NOTES — C

SYMBOL	IRRIGATION DESCRIPTION
IR-101	IRRIGATION EQUIPMENT SHOWN OUTSIDE PLANTING AREAS FOR GRAPHIC CLARITY ONLY. EQUIPMENT SHALL BE LOCATED INSIDE PLANTING AREAS AND VALVE BOXES SHALL BE ALIGNED WITH PLANTING BEDS AND EDGE OF PAVEMENT, TYP.
IR-102	VERIFY P.O.C IN THE FIELD, SEE CIVIL PLANS FOR WATER METER LOCATION. P.O.C. TO BE 1 1/2 INCHES.
IR-103	PEDESTAL MOUNT CONTROLLER, COORDINATE WITH ELECTRICAL CONNECTIONS FOR 120V POWER. POWER MUST BE METERED FOR ALL CONTROLLERS.
IR-104	RAIN SENSOR, SEE SHEET L.R502 DETAIL B
IR-105	EXISTING SECONDARY IRRIGATION WATER SUPPLY, SEE CIVIL PLANS FOR DETAILS.
IR-106	1 1/2 INCH P.O.C. NOT USED IN CURRENT IRRIGATION PLANS; FOR FUTURE USE ONLY.

CRITICAL ANALYSIS — D

Generated:	2014-06-11	Generated:	2014-08-13
P.O.C. NUMBER:01		P.O.C. NUMBER:02	
Water Source Information:		Water Source Information:	
FLOW AVAILABLE		FLOW AVAILABLE	
Point of Connection Size:	1-1/2"	Point of Connection Size:	1-1/2"
Flow Available:	47.66 gpm	Flow Available:	47.66 gpm
PRESSURE AVAILABLE		PRESSURE AVAILABLE	
Static Pressure at POC:	50.00 psi	Static Pressure at POC:	100.00 psi
Pressure Available:	50.00 psi	Pressure Available:	100.00 psi
DESIGN ANALYSIS		DESIGN ANALYSIS	
Maximum Station Flow:	34.50 gpm	Maximum Station Flow:	7.16 gpm
Flow Available at POC:	47.66 gpm	Flow Available at POC:	47.66 gpm
Residual Flow Available:	13.16 gpm	Residual Flow Available:	40.50 gpm
Critical Station:	7	Critical Station:	12
Design Pressure:	30.00 psi	Design Pressure:	30.00 psi
Elevation Loss:	0.00 psi	Elevation Loss:	0.00 psi
Friction Loss:	5.76 psi	Friction Loss:	4.32 psi
Fittings Loss:	0.58 psi	Fittings Loss:	0.43 psi
Loss through Valve:	3.56 psi	Loss through Valve:	2.37 psi
Pressure Req. at Critical Station:	39.88 psi	Pressure Req. at Critical Station:	37.12 psi
Loss for Fittings:	0.36 psi	Loss for Fittings:	0.00 psi
Loss for Main Line:	3.58 psi	Loss for Main Line:	0.02 psi
Loss for POC to Valve Elevation:	0.00 psi	Loss for POC to Valve Elevation:	0.00 psi
Loss for Backflow:	0.00 psi	Loss for Backflow:	0.00 psi
Loss for Master Valve:	3.56 psi	Loss for Master Valve:	3.90 psi
Critical Station Pressure at POC:	47.38 psi	Critical Station Pressure at POC:	41.04 psi
Pressure Available:	50.00 psi	Pressure Available:	100.00 psi
Residual Pressure Available:	2.62 psi	Residual Pressure Available:	58.96 psi

SCALE & N. ARROW — F

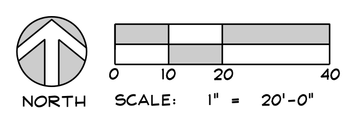

KEYPLAN — E

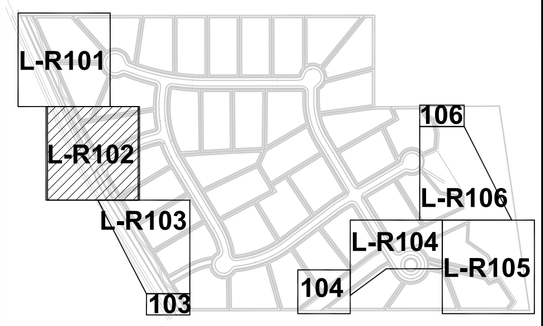

Arc Sitio Design, Inc
Landscape Architecture & Architectural Site Design
1058 East 2100 South
Salt Lake City, Utah 84106
office 801 . 487 . 4923
fax 801 . 466 . 3046
www.arcsitiodesign.com

consultant:

project

Sail House Development

Saratoga Springs, UT

date

SEPTEMBER 22, 2014

revisions

data

asd project no: 14027

title

IRRIGATION PLAN

sheet

L-R102

File : E:\14027_Sail House\Cadd\irrigation.dwg Sep 22, 2014 - 11:33am

IRRIGATION PLAN — G

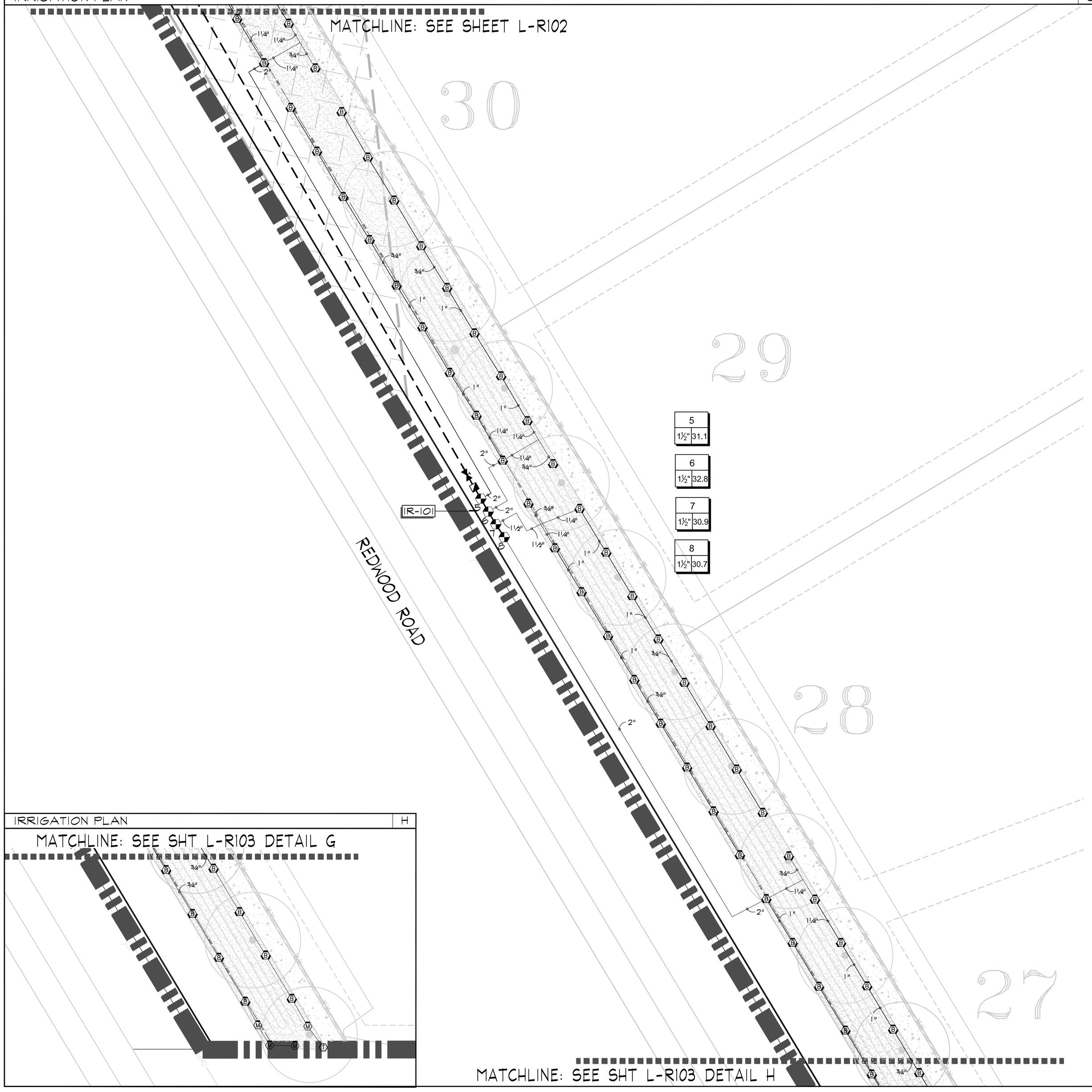

IRRIGATION PLAN — H

IRRIGATION SCHEDULE — A

* SEE SHEET L-R501 DETAIL 'A' FOR IRRIGATION SCHEDULE *

IRRIGATION NOTES — B

1. IT IS THE INTENT OF THESE IRRIGATION PLANS TO PROVIDE THE CONTRACTOR WITH CONSTRUCTION INFORMATION THAT WILL ENABLE HIM TO INSTALL A COMPLETE AND OPERATIONAL IRRIGATION SYSTEM.
2. THE CONTRACTOR SHALL VERIFY THE AVAILABLE WATER PRESSURE ON THE SITE PRIOR TO CONSTRUCTION. REPORT ANY DIFFERENCES BETWEEN THE WATER PRESSURE SHOWN ON THE DRAWINGS AND THE ACTUAL PRESSURE READINGS AT THE POINT OF CONNECTION. IN THE EVENT THE PRESSURE DIFFERENCES ARE NOT REPORTED PRIOR TO THE START OF CONSTRUCTION, THE CONTRACTOR SHALL ASSUME FULL RESPONSIBILITY FOR ANY REVISIONS NECESSARY. CONTRACTOR TO MAINTAIN OPERATING PRESSURE FOR EACH ZONE TO THE LAST HEAD.
3. IT IS THE RESPONSIBILITY OF THE CONTRACTOR TO FAMILIARIZE HIMSELF WITH ALL GRADE DIFFERENCES, LOCATION OF WALLS, STRUCTURES, WALKS, AND UTILITIES. THE IRRIGATION CONTRACTOR SHALL REPAIR OR REPLACE ALL ITEMS DAMAGED BY HIS WORK. HE SHALL COORDINATE HIS WORK WITH OTHER CONTRACTORS FOR THE LOCATION AND INSTALLATION OF PIPE SLEEVES AND LATERALS THROUGH WALLS AND UNDER PAVING.
4. DO NOT WILLFULLY INSTALL THE IRRIGATION SYSTEM AS SHOWN ON THE PLANS WHEN IT IS OBVIOUS IN THE FIELD THAT UNKNOWN OBSTRUCTIONS OR GRADING DIFFERENCES MAY NOT HAVE BEEN CONSIDERED IN THE ENGINEERING. SUCH OBSTRUCTIONS OR DIFFERENCES SHOULD BE BROUGHT TO THE ATTENTION OF THE LANDSCAPE ARCHITECT. IN THE EVENT THAT THIS NOTIFICATION IS NOT PERFORMED, THE CONTRACTOR SHALL ASSUME FULL RESPONSIBILITY FOR ANY REVISIONS NECESSARY.
5. THIS DESIGN IS DIAGRAMMATIC, ALL IRRIGATION EQUIPMENT SHOWN WITHIN PAVED AREAS ARE FOR DESIGN CLARIFICATION ONLY AND SHALL BE INSTALLED IN PLANTING AREAS WHEREVER POSSIBLE.
6. THE CONTRACTOR SHALL BE RESPONSIBLE FOR REPAIRING AND/OR REPLACING ANY SITE ITEM DAMAGED DURING THE COURSE OF CONSTRUCTION.
7. THE CONTRACTOR SHALL FLUSH AND ADJUST ALL SPRINKLER HEADS AND VALVES FOR OPTIMUM COVERAGE. INSTALL ALL SPRINKLER HEADS WITH NOZZLES OF THE APPROPRIATE DEGREE AND RADIUS FOR THE AREA TO BE COVERED. ADJUST ALL NOZZLES TO ELIMINATE SPRAYING ONTO WALKS, BUILDINGS, ETC.
8. ALL PIPE INSTALLED IN PAVING SHALL BE SLEEVED PER THE LEGEND.
9. INSTALL CHECK VALVE PER LEGEND AS NEEDED TO PREVENT HEAD DRAINAGE FROM BUBBLING, SPRAY HEADS AND DRIP EMITTERS. DIAMETER.
10. MINIMUM SIZE PIPE ON ANY CIRCUIT IS 3/4"
11. CONTRACTOR TO INSTALL MANUAL DRAIN VALVES AT ALL LOW POINTS ON MAINLINE - SEE SHEET L.R502 DETAIL H.
12. PROVIDE AND INSTALL ALL THE MANUFACTURER'S RECOMMENDED SURGE AND LIGHTNING PROTECTION EQUIPMENT ON CONTROLLERS.
13. ALIGN VALVE BOXES WITHIN PLANTING BEDS AND EDGE OF PAVEMENT, TYP.

IRRIGATION REFERENCE NOTES — C

SYMBOL	IRRIGATION DESCRIPTION
IR-101	IRRIGATION EQUIPMENT SHOWN OUTSIDE PLANTING AREAS FOR GRAPHIC CLARITY ONLY. EQUIPMENT SHALL BE LOCATED INSIDE PLANTING AREAS AND VALVE BOXES SHALL BE ALIGNED WITH PLANTING BEDS AND EDGE OF PAVEMENT, TYP.
IR-102	VERIFY P.O.C IN THE FIELD, SEE CIVIL PLANS FOR WATER METER LOCATION. P.O.C. TO BE 1 1/2 INCHES.
IR-103	PEDESTAL MOUNT CONTROLLER, COORDINATE WITH ELECTRICAL CONNECTIONS FOR 120V POWER. POWER MUST BE METERED FOR ALL CONTROLLERS.
IR-104	RAIN SENSOR, SEE SHEET L.R502 DETAIL B
IR-105	EXISTING SECONDARY IRRIGATION WATER SUPPLY, SEE CIVIL PLANS FOR DETAILS.
IR-106	1 1/2 INCH P.O.C. NOT USED IN CURRENT IRRIGATION PLANS; FOR FUTURE USE ONLY.

CRITICAL ANALYSIS — D

Generated:	2014-06-11	Generated:	2014-08-13
P.O.C. NUMBER:01		P.O.C. NUMBER:02	
Water Source Information:		Water Source Information:	
FLOW AVAILABLE		FLOW AVAILABLE	
Point of Connection Size:	1-1/2"	Point of Connection Size:	1-1/2"
Flow Available:	47.66 gpm	Flow Available:	47.66 gpm
PRESSURE AVAILABLE		PRESSURE AVAILABLE	
Static Pressure at POC:	50.00 psi	Static Pressure at POC:	100.00 psi
Pressure Available:	50.00 psi	Pressure Available:	100.00 psi
DESIGN ANALYSIS		DESIGN ANALYSIS	
Maximum Station Flow:	34.50 gpm	Maximum Station Flow:	7.16 gpm
Flow Available at POC:	47.66 gpm	Flow Available at POC:	47.66 gpm
Residual Flow Available:	13.16 gpm	Residual Flow Available:	40.50 gpm
Critical Station:	7	Critical Station:	12
Design Pressure:	30.00 psi	Design Pressure:	30.00 psi
Elevation Loss:	0.00 psi	Elevation Loss:	0.00 psi
Friction Loss:	5.76 psi	Friction Loss:	4.32 psi
Fittings Loss:	0.58 psi	Fittings Loss:	0.43 psi
Loss through Valve:	3.56 psi	Loss through Valve:	2.37 psi
Pressure Req. at Critical Station:	39.88 psi	Pressure Req. at Critical Station:	37.12 psi
Loss for Fittings:	0.36 psi	Loss for Fittings:	0.00 psi
Loss for Main Line:	3.58 psi	Loss for Main Line:	0.02 psi
Loss for POC to Valve Elevation:	0.00 psi	Loss for POC to Valve Elevation:	0.00 psi
Loss for Backflow:	0.00 psi	Loss for Backflow:	0.00 psi
Loss for Master Valve:	3.56 psi	Loss for Master Valve:	3.90 psi
Critical Station Pressure at POC:	47.38 psi	Critical Station Pressure at POC:	41.04 psi
Pressure Available:	50.00 psi	Pressure Available:	100.00 psi
Residual Pressure Available:	2.62 psi	Residual Pressure Available:	58.96 psi

SCALE & N. ARROW — F

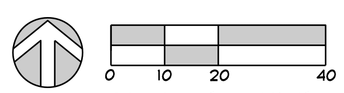

KEYPLAN — E

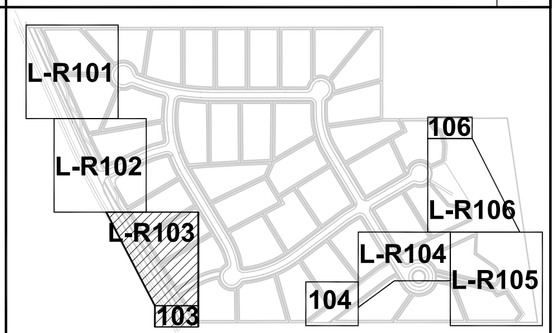

Arc Sitio Design, Inc
Landscape Architecture & Architectural Site Design
1058 East 2100 South
Salt Lake City, Utah 84106
office 801 . 487 . 4923
fax 801 . 466 . 3046
www.arcsitiodesign.com

consultant:

project

Sail House Development

Saratoga Springs, UT

date

SEPTEMBER 22, 2014

revisions

data

asd project no: 14027

title

IRRIGATION PLAN

sheet

L-R103

File : E:\14027_Sail House\Cadd\Irrigation.dwg Sep 22, 2014-11:30am

IRRIGATION PLAN — G

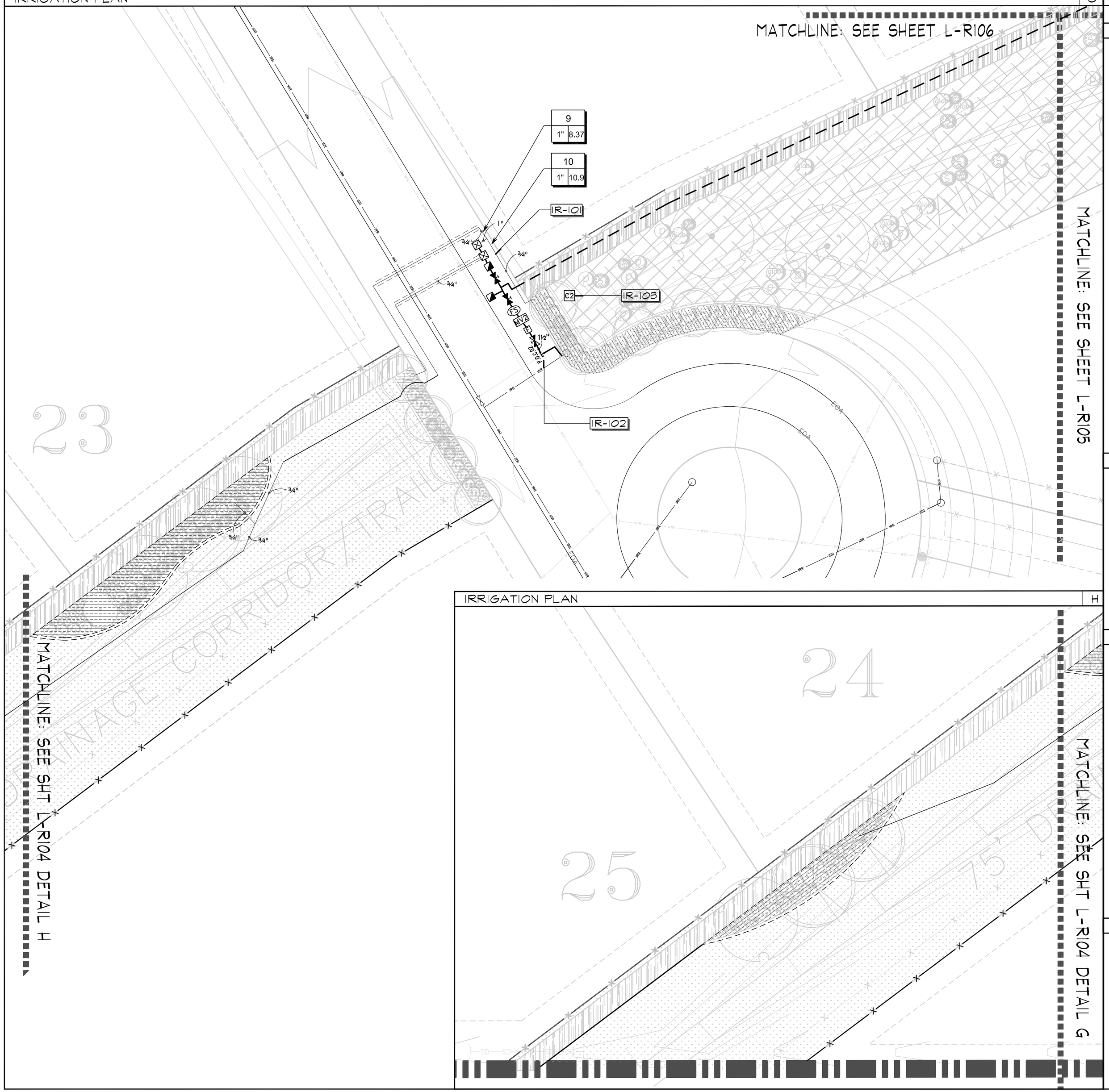

IRRIGATION PLAN — H

IRRIGATION SCHEDULE — A

* SEE SHEET L-R501 DETAIL 'A' FOR IRRIGATION SCHEDULE *

IRRIGATION NOTES — B

1. IT IS THE INTENT OF THESE IRRIGATION PLANS TO PROVIDE THE CONTRACTOR WITH CONSTRUCTION INFORMATION THAT WILL ENABLE HIM TO INSTALL A COMPLETE AND OPERATIONAL IRRIGATION SYSTEM.
2. THE CONTRACTOR SHALL VERIFY THE AVAILABLE WATER PRESSURE ON THE SITE PRIOR TO CONSTRUCTION. REPORT ANY DIFFERENCES BETWEEN THE WATER PRESSURE SHOWN ON THE DRAWINGS AND THE ACTUAL PRESSURE READINGS AT THE POINT OF CONNECTION. IN THE EVENT THE PRESSURE DIFFERENCES ARE NOT REPORTED PRIOR TO THE START OF CONSTRUCTION, THE CONTRACTOR SHALL ASSUME FULL RESPONSIBILITY FOR ANY REVISIONS NECESSARY. CONTRACTOR TO MAINTAIN OPERATING PRESSURE FOR EACH ZONE TO THE LAST HEAD.
3. IT IS THE RESPONSIBILITY OF THE CONTRACTOR TO FAMILIARIZE HIMSELF WITH ALL GRADE DIFFERENCES, LOCATION OF WALLS, STRUCTURES, WALKS, AND UTILITIES. THE IRRIGATION CONTRACTOR SHALL REPAIR OR REPLACE ALL ITEMS DAMAGED BY HIS WORK. HE SHALL COORDINATE HIS WORK WITH OTHER CONTRACTORS FOR THE LOCATION AND INSTALLATION OF PIPE SLEEVES AND LATERALS THROUGH WALLS AND UNDER PAVING.
4. DO NOT WILLFULLY INSTALL THE IRRIGATION SYSTEM AS SHOWN ON THE PLANS WHEN IT IS OBVIOUS IN THE FIELD THAT UNKNOWN OBSTRUCTIONS OR GRADING DIFFERENCES MAY NOT HAVE BEEN CONSIDERED IN THE ENGINEERING. SUCH OBSTRUCTIONS OR DIFFERENCES SHOULD BE BROUGHT TO THE ATTENTION OF THE LANDSCAPE ARCHITECT. IN THE EVENT THAT THIS NOTIFICATION IS NOT PERFORMED, THE CONTRACTOR SHALL ASSUME FULL RESPONSIBILITY FOR ANY REVISIONS NECESSARY.
5. THIS DESIGN IS DIAGRAMMATIC, ALL IRRIGATION EQUIPMENT SHOWN WITHIN PAVED AREAS ARE FOR DESIGN CLARIFICATION ONLY AND SHALL BE INSTALLED IN PLANTING AREAS WHEREVER POSSIBLE.
6. THE CONTRACTOR SHALL BE RESPONSIBLE FOR REPAIRING AND/OR REPLACING ANY SITE ITEM DAMAGED DURING THE COURSE OF CONSTRUCTION.
7. THE CONTRACTOR SHALL FLUSH AND ADJUST ALL SPRINKLER HEADS AND VALVES FOR OPTIMUM COVERAGE. INSTALL ALL SPRINKLER HEADS WITH NOZZLES OF THE APPROPRIATE DEGREE AND RADIUS FOR THE AREA TO BE COVERED. ADJUST ALL NOZZLES TO ELIMINATE SPRAYING ONTO WALKS, BUILDINGS, ETC.
8. ALL PIPE INSTALLED IN PAVING SHALL BE SLEEVED PER THE LEGEND.
9. INSTALL CHECK VALVE PER LEGEND AS NEEDED TO PREVENT HEAD DRAINAGE FROM BUBBLING, SPRAY HEADS AND DRIP EMITTERS. DIAMETER.
10. MINIMUM SIZE PIPE ON ANY CIRCUIT IS 3/4"
11. CONTRACTOR TO INSTALL MANUAL DRAIN VALVES AT ALL LOW POINTS ON MAINLINE - SEE SHEET L.R502 DETAIL H.
12. PROVIDE AND INSTALL ALL THE MANUFACTURER'S RECOMMENDED SURGE AND LIGHTNING PROTECTION EQUIPMENT ON CONTROLLERS.
13. ALIGN VALVE BOXES WITHIN PLANTING BEDS AND EDGE OF PAVEMENT, TYP.

IRRIGATION REFERENCE NOTES — C

SYMBOL	IRRIGATION DESCRIPTION
IR-101	IRRIGATION EQUIPMENT SHOWN OUTSIDE PLANTING AREAS FOR GRAPHIC CLARITY ONLY. EQUIPMENT SHALL BE LOCATED INSIDE PLANTING AREAS AND VALVE BOXES SHALL BE ALIGNED WITH PLANTING BEDS AND EDGE OF PAVEMENT, TYP.
IR-102	VERIFY P.O.C IN THE FIELD, SEE CIVIL PLANS FOR WATER METER LOCATION. P.O.C. TO BE 1 1/2 INCHES.
IR-103	PEDESTAL MOUNT CONTROLLER, COORDINATE WITH ELECTRICAL CONNECTIONS FOR 120V POWER. POWER MUST BE METERED FOR ALL CONTROLLERS.
IR-104	RAIN SENSOR, SEE SHEET L.R502 DETAIL B
IR-105	EXISTING SECONDARY IRRIGATION WATER SUPPLY, SEE CIVIL PLANS FOR DETAILS.
IR-106	1 1/2 INCH P.O.C. NOT USED IN CURRENT IRRIGATION PLANS; FOR FUTURE USE ONLY.

CRITICAL ANALYSIS — D

Generated:	2014-06-11	Generated:	2014-08-13
P.O.C. NUMBER:01		P.O.C. NUMBER:02	
Water Source Information:		Water Source Information:	
FLOW AVAILABLE		FLOW AVAILABLE	
Point of Connection Size:	1-1/2"	Point of Connection Size:	1-1/2"
Flow Available:	47.66 gpm	Flow Available:	47.66 gpm
PRESSURE AVAILABLE		PRESSURE AVAILABLE	
Static Pressure at POC:	50.00 psi	Static Pressure at POC:	100.00 psi
Pressure Available:	50.00 psi	Pressure Available:	100.00 psi
DESIGN ANALYSIS		DESIGN ANALYSIS	
Maximum Station Flow:	34.50 gpm	Maximum Station Flow:	7.16 gpm
Flow Available at POC:	47.66 gpm	Flow Available at POC:	47.66 gpm
Residual Flow Available:	13.16 gpm	Residual Flow Available:	40.50 gpm
Critical Station:	7	Critical Station:	12
Design Pressure:	30.00 psi	Design Pressure:	30.00 psi
Elevation Loss:	0.00 psi	Elevation Loss:	0.00 psi
Friction Loss:	5.76 psi	Friction Loss:	4.32 psi
Fittings Loss:	0.58 psi	Fittings Loss:	0.43 psi
Loss through Valve:	3.56 psi	Loss through Valve:	2.37 psi
Pressure Req. at Critical Station:	39.88 psi	Pressure Req. at Critical Station:	37.12 psi
Loss for Fittings:	0.36 psi	Loss for Fittings:	0.00 psi
Loss for Main Line:	3.58 psi	Loss for Main Line:	0.02 psi
Loss for POC to Valve Elevation:	0.00 psi	Loss for POC to Valve Elevation:	0.00 psi
Loss for Backflow:	0.00 psi	Loss for Backflow:	0.00 psi
Loss for Master Valve:	3.56 psi	Loss for Master Valve:	3.90 psi
Critical Station Pressure at POC:	47.38 psi	Critical Station Pressure at POC:	41.04 psi
Pressure Available:	50.00 psi	Pressure Available:	100.00 psi
Residual Pressure Available:	2.62 psi	Residual Pressure Available:	58.96 psi

SCALE & N. ARROW — F

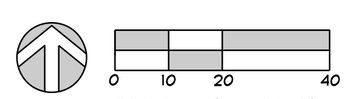

KEYPLAN — E

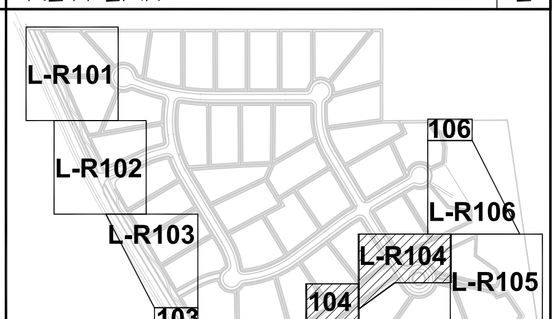

Arc Sitio Design, Inc
Landscape Architecture & Architectural Site Design
1058 East 2100 South
Salt Lake City, Utah 84106
office 801 . 487 . 4923
fax 801 . 466 . 3046
www.arcsitiodesign.com

consultant:

project
Sail House Development
Saratoga Springs, UT

date
SEPTEMBER 22, 2014

revisions

data
asd project no: 14027

title
IRRIGATION PLAN

sheet
L-R104

File : E:\14027_Sail House\Cadd\irrigation.dwg Sep 22, 2014-11:28am

IRRIGATION PLAN

G

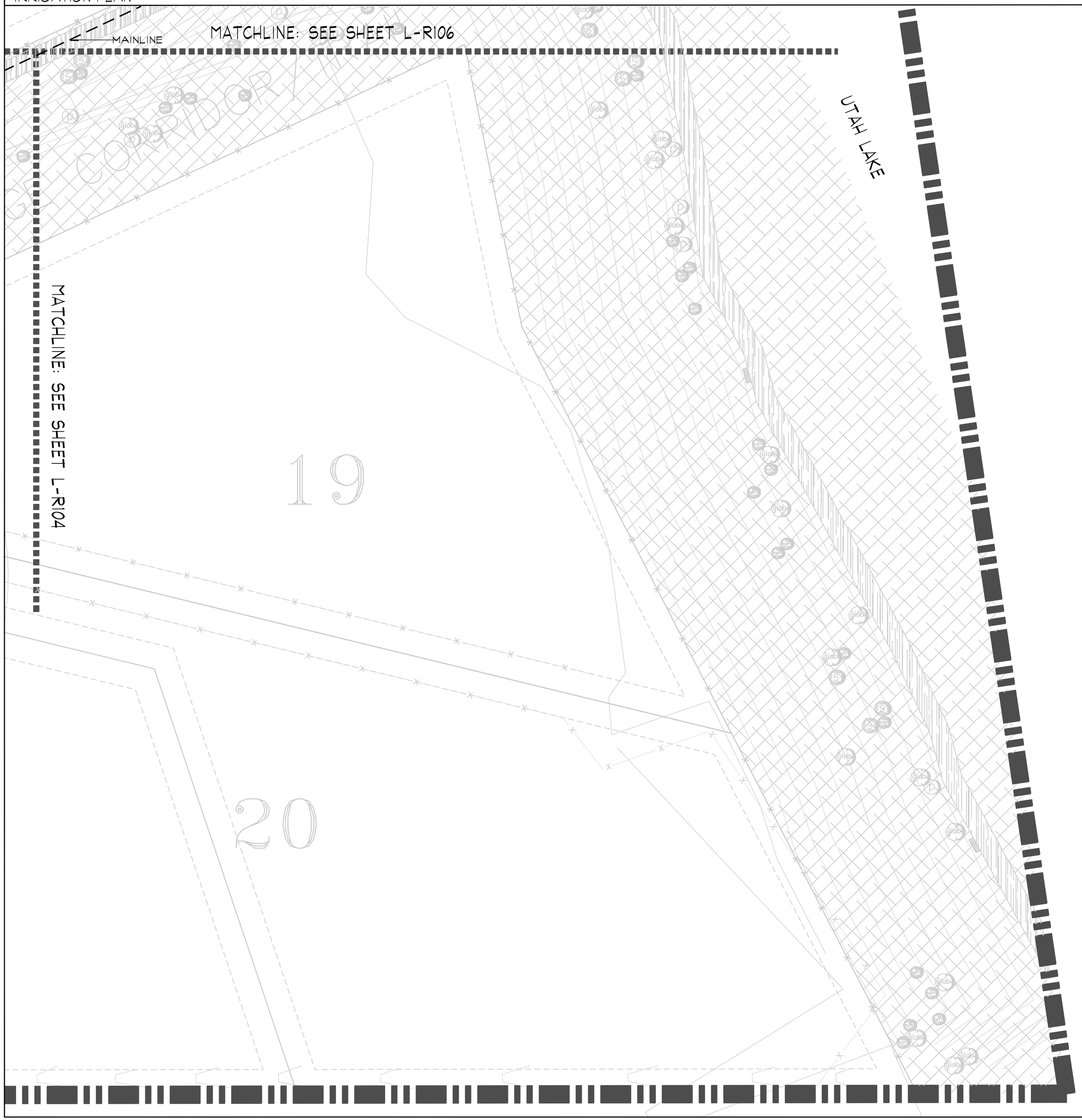

IRRIGATION SCHEDULE

A

* SEE SHEET L-R501 DETAIL 'A' FOR IRRIGATION SCHEDULE *

IRRIGATION NOTES

B

1. IT IS THE INTENT OF THESE IRRIGATION PLANS TO PROVIDE THE CONTRACTOR WITH CONSTRUCTION INFORMATION THAT WILL ENABLE HIM TO INSTALL A COMPLETE AND OPERATIONAL IRRIGATION SYSTEM.
2. THE CONTRACTOR SHALL VERIFY THE AVAILABLE WATER PRESSURE ON THE SITE PRIOR TO CONSTRUCTION. REPORT ANY DIFFERENCES BETWEEN THE WATER PRESSURE SHOWN ON THE DRAWINGS AND THE ACTUAL PRESSURE READINGS AT THE POINT OF CONNECTION. IN THE EVENT THE PRESSURE DIFFERENCES ARE NOT REPORTED PRIOR TO THE START OF CONSTRUCTION, THE CONTRACTOR SHALL ASSUME FULL RESPONSIBILITY FOR ANY REVISIONS NECESSARY. CONTRACTOR TO MAINTAIN OPERATING PRESSURE FOR EACH ZONE TO THE LAST HEAD.
3. IT IS THE RESPONSIBILITY OF THE CONTRACTOR TO FAMILIARIZE HIMSELF WITH ALL GRADE DIFFERENCES, LOCATION OF WALLS, STRUCTURES, WALKS, AND UTILITIES. THE IRRIGATION CONTRACTOR SHALL REPAIR OR REPLACE ALL ITEMS DAMAGED BY HIS WORK. HE SHALL COORDINATE HIS WORK WITH OTHER CONTRACTORS FOR THE LOCATION AND INSTALLATION OF PIPE SLEEVES AND LATERALS THROUGH WALLS AND UNDER PAVING.
4. DO NOT WILLFULLY INSTALL THE IRRIGATION SYSTEM AS SHOWN ON THE PLANS WHEN IT IS OBVIOUS IN THE FIELD THAT UNKNOWN OBSTRUCTIONS OR GRADING DIFFERENCES MAY NOT HAVE BEEN CONSIDERED IN THE ENGINEERING. SUCH OBSTRUCTIONS OR DIFFERENCES SHOULD BE BROUGHT TO THE ATTENTION OF THE LANDSCAPE ARCHITECT. IN THE EVENT THAT THIS NOTIFICATION IS NOT PERFORMED, THE CONTRACTOR SHALL ASSUME FULL RESPONSIBILITY FOR ANY REVISIONS NECESSARY.
5. THIS DESIGN IS DIAGRAMMATIC, ALL IRRIGATION EQUIPMENT SHOWN WITHIN PAVED AREAS ARE FOR DESIGN CLARIFICATION ONLY AND SHALL BE INSTALLED IN PLANTING AREAS WHEREVER POSSIBLE.
6. THE CONTRACTOR SHALL BE RESPONSIBLE FOR REPAIRING AND/OR REPLACING ANY SITE ITEM DAMAGED DURING THE COURSE OF CONSTRUCTION.
7. THE CONTRACTOR SHALL FLUSH AND ADJUST ALL SPRINKLER HEADS AND VALVES FOR OPTIMUM COVERAGE. INSTALL ALL SPRINKLER HEADS WITH NOZZLES OF THE APPROPRIATE DEGREE AND RADIUS FOR THE AREA TO BE COVERED. ADJUST ALL NOZZLES TO ELIMINATE SPRAYING ONTO WALKS, BUILDINGS, ETC.
8. ALL PIPE INSTALLED IN PAVING SHALL BE SLEEVED PER THE LEGEND.
9. INSTALL CHECK VALVE PER LEGEND AS NEEDED TO PREVENT HEAD DRAINAGE FROM BUBBLING, SPRAY HEADS AND DRIP EMITTERS. DIAMETER.
10. MINIMUM SIZE PIPE ON ANY CIRCUIT IS 3/4"
11. CONTRACTOR TO INSTALL MANUAL DRAIN VALVES AT ALL LOW POINTS ON MAINLINE - SEE SHEET L.R502 DETAIL H.
12. PROVIDE AND INSTALL ALL THE MANUFACTURER'S RECOMMENDED SURGE AND LIGHTNING PROTECTION EQUIPMENT ON CONTROLLERS.
13. ALIGN VALVE BOXES WITHIN PLANTING BEDS AND EDGE OF PAVEMENT, TYP.

IRRIGATION REFERENCE NOTES

C

SYMBOL	IRRIGATION DESCRIPTION
IR-101	IRRIGATION EQUIPMENT SHOWN OUTSIDE PLANTING AREAS FOR GRAPHIC CLARITY ONLY. EQUIPMENT SHALL BE LOCATED INSIDE PLANTING AREAS AND VALVE BOXES SHALL BE ALIGNED WITH PLANTING BEDS AND EDGE OF PAVEMENT, TYP.
IR-102	VERIFY P.O.C IN THE FIELD, SEE CIVIL PLANS FOR WATER METER LOCATION. P.O.C. TO BE 1 1/2 INCHES.
IR-103	PEDESTAL MOUNT CONTROLLER, COORDINATE WITH ELECTRICAL CONNECTIONS FOR 120V POWER. POWER MUST BE METERED FOR ALL CONTROLLERS.
IR-104	RAIN SENSOR, SEE SHEET L.R502 DETAIL B
IR-105	EXISTING SECONDARY IRRIGATION WATER SUPPLY, SEE CIVIL PLANS FOR DETAILS.
IR-106	1 1/2 INCH P.O.C. NOT USED IN CURRENT IRRIGATION PLANS; FOR FUTURE USE ONLY.

CRITICAL ANALYSIS

D

Generated:	2014-06-11	Generated:	2014-08-13
P.O.C. NUMBER:01		P.O.C. NUMBER:02	
Water Source Information:		Water Source Information:	
FLOW AVAILABLE		FLOW AVAILABLE	
Point of Connection Size:	1-1/2"	Point of Connection Size:	1-1/2"
Flow Available:	47.66 gpm	Flow Available:	47.66 gpm
PRESSURE AVAILABLE		PRESSURE AVAILABLE	
Static Pressure at POC:	50.00 psi	Static Pressure at POC:	100.00 psi
Pressure Available:	50.00 psi	Pressure Available:	100.00 psi
DESIGN ANALYSIS		DESIGN ANALYSIS	
Maximum Station Flow:	34.50 gpm	Maximum Station Flow:	7.16 gpm
Flow Available at POC:	47.66 gpm	Flow Available at POC:	47.66 gpm
Residual Flow Available:	13.16 gpm	Residual Flow Available:	40.50 gpm
Critical Station:	7	Critical Station:	12
Design Pressure:	30.00 psi	Design Pressure:	30.00 psi
Elevation Loss:	0.00 psi	Elevation Loss:	0.00 psi
Friction Loss:	5.76 psi	Friction Loss:	4.32 psi
Fittings Loss:	0.58 psi	Fittings Loss:	0.43 psi
Loss through Valve:	3.56 psi	Loss through Valve:	2.37 psi
Pressure Req. at Critical Station:	39.88 psi	Pressure Req. at Critical Station:	37.12 psi
Loss for Fittings:	0.36 psi	Loss for Fittings:	0.00 psi
Loss for Main Line:	3.58 psi	Loss for Main Line:	0.02 psi
Loss for POC to Valve Elevation:	0.00 psi	Loss for POC to Valve Elevation:	0.00 psi
Loss for Backflow:	0.00 psi	Loss for Backflow:	0.00 psi
Loss for Master Valve:	3.56 psi	Loss for Master Valve:	3.90 psi
Critical Station Pressure at POC:	47.38 psi	Critical Station Pressure at POC:	41.04 psi
Pressure Available:	50.00 psi	Pressure Available:	100.00 psi
Residual Pressure Available:	2.62 psi	Residual Pressure Available:	58.96 psi

SCALE & N. ARROW

F

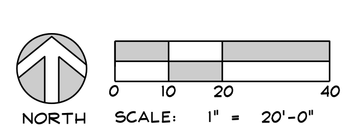

KEYPLAN

E

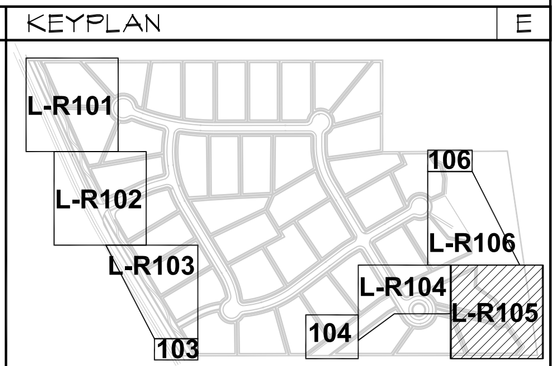

Arc Sitio Design, Inc
Landscape Architecture & Architectural Site Design
1058 East 2100 South
Salt Lake City, Utah 84106
office 801 . 487 . 4923
fax 801 . 466 . 3046
www.arcsitiodesign.com

consultant:

project

Sail House Development

Saratoga Springs, UT

date

SEPTEMBER 22, 2014

revisions

data

asd project no: 14027

title

IRRIGATION PLAN

sheet

L-R105

File : E:\14027_Sail House\Cadd\Irrigation.dwg Sep 22, 2014 - 11:27am

IRRIGATION PLAN | G

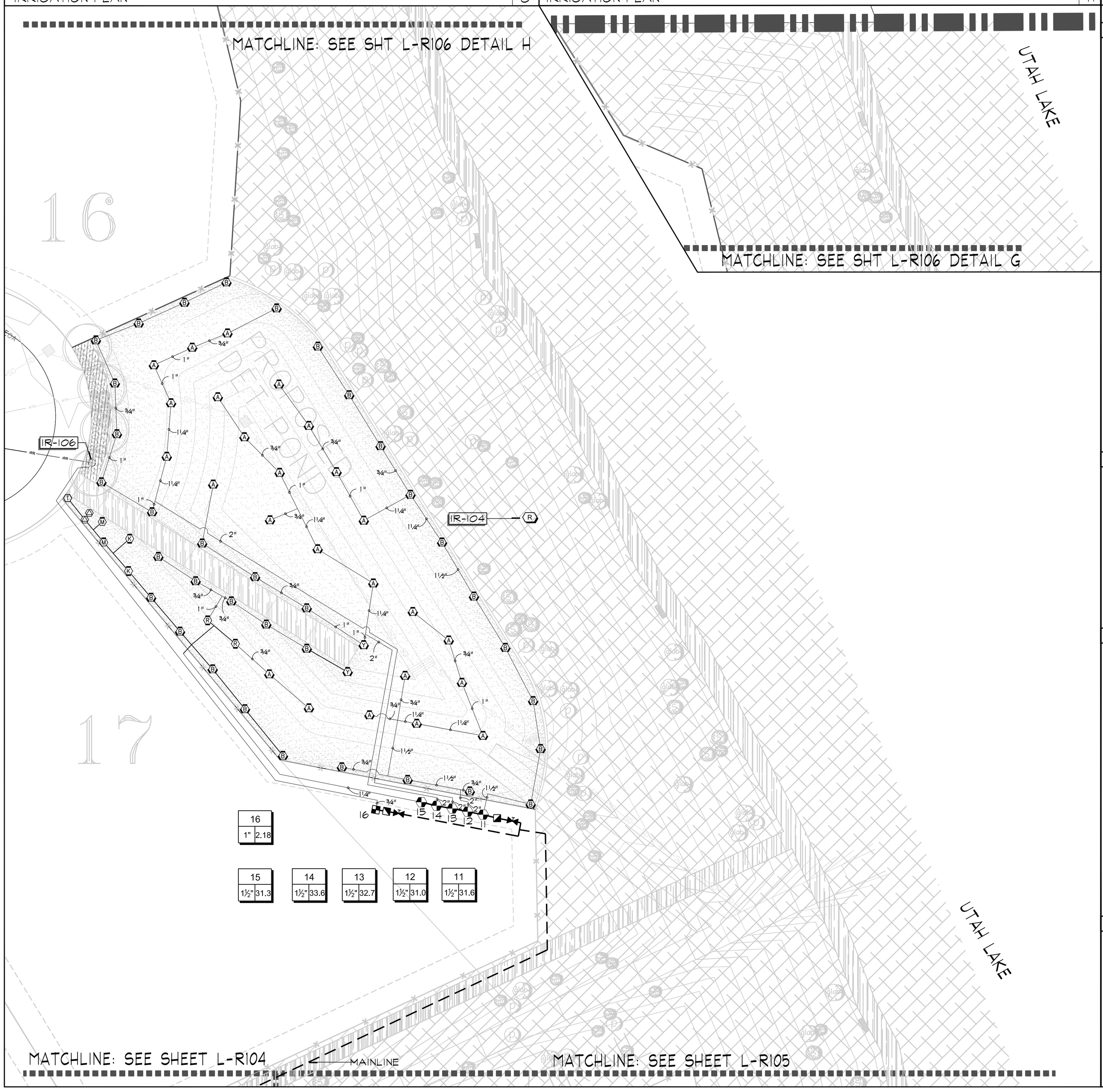

IRRIGATION PLAN | H

IRRIGATION SCHEDULE | A

* SEE SHEET L-R501 DETAIL 'A' FOR IRRIGATION SCHEDULE *

IRRIGATION NOTES | B

1. IT IS THE INTENT OF THESE IRRIGATION PLANS TO PROVIDE THE CONTRACTOR WITH CONSTRUCTION INFORMATION THAT WILL ENABLE HIM TO INSTALL A COMPLETE AND OPERATIONAL IRRIGATION SYSTEM.
2. THE CONTRACTOR SHALL VERIFY THE AVAILABLE WATER PRESSURE ON THE SITE PRIOR TO CONSTRUCTION. REPORT ANY DIFFERENCES BETWEEN THE WATER PRESSURE SHOWN ON THE DRAWINGS AND THE ACTUAL PRESSURE READINGS AT THE POINT OF CONNECTION. IN THE EVENT THE PRESSURE DIFFERENCES ARE NOT REPORTED PRIOR TO THE START OF CONSTRUCTION, THE CONTRACTOR SHALL ASSUME FULL RESPONSIBILITY FOR ANY REVISIONS NECESSARY. CONTRACTOR TO MAINTAIN OPERATING PRESSURE FOR EACH ZONE TO THE LAST HEAD.
3. IT IS THE RESPONSIBILITY OF THE CONTRACTOR TO FAMILIARIZE HIMSELF WITH ALL GRADE DIFFERENCES, LOCATION OF WALLS, STRUCTURES, WALKS, AND UTILITIES. THE IRRIGATION CONTRACTOR SHALL REPAIR OR REPLACE ALL ITEMS DAMAGED BY HIS WORK. HE SHALL COORDINATE HIS WORK WITH OTHER CONTRACTORS FOR THE LOCATION AND INSTALLATION OF PIPE SLEEVES AND LATERALS THROUGH WALLS AND UNDER PAVING.
4. DO NOT WILLFULLY INSTALL THE IRRIGATION SYSTEM AS SHOWN ON THE PLANS WHEN IT IS OBVIOUS IN THE FIELD THAT UNKNOWN OBSTRUCTIONS OR GRADING DIFFERENCES MAY NOT HAVE BEEN CONSIDERED IN THE ENGINEERING. SUCH OBSTRUCTIONS OR DIFFERENCES SHOULD BE BROUGHT TO THE ATTENTION OF THE LANDSCAPE ARCHITECT. IN THE EVENT THAT THIS NOTIFICATION IS NOT PERFORMED, THE CONTRACTOR SHALL ASSUME FULL RESPONSIBILITY FOR ANY REVISIONS NECESSARY.
5. THIS DESIGN IS DIAGRAMMATIC, ALL IRRIGATION EQUIPMENT SHOWN WITHIN PAVED AREAS ARE FOR DESIGN CLARIFICATION ONLY AND SHALL BE INSTALLED IN PLANTING AREAS WHEREVER POSSIBLE.
6. THE CONTRACTOR SHALL BE RESPONSIBLE FOR REPAIRING AND/OR REPLACING ANY SITE ITEM DAMAGED DURING THE COURSE OF CONSTRUCTION.
7. THE CONTRACTOR SHALL FLUSH AND ADJUST ALL SPRINKLER HEADS AND VALVES FOR OPTIMUM COVERAGE. INSTALL ALL SPRINKLER HEADS WITH NOZZLES OF THE APPROPRIATE DEGREE AND RADIUS FOR THE AREA TO BE COVERED. ADJUST ALL NOZZLES TO ELIMINATE SPRAYING ONTO WALKS, BUILDINGS, ETC.
8. ALL PIPE INSTALLED IN PAVING SHALL BE SLEEVED PER THE LEGEND.
9. INSTALL CHECK VALVE PER LEGEND AS NEEDED TO PREVENT HEAD DRAINAGE FROM BUBBLING, SPRAY HEADS AND DRIP EMITTERS. DIAMETER.
10. MINIMUM SIZE PIPE ON ANY CIRCUIT IS 3/4"
11. CONTRACTOR TO INSTALL MANUAL DRAIN VALVES AT ALL LOW POINTS ON MAINLINE - SEE SHEET L.R502 DETAIL H.
12. PROVIDE AND INSTALL ALL THE MANUFACTURER'S RECOMMENDED SURGE AND LIGHTNING PROTECTION EQUIPMENT ON CONTROLLERS.
13. ALIGN VALVE BOXES WITHIN PLANTING BEDS AND EDGE OF PAVEMENT, TYP.

IRRIGATION REFERENCE NOTES | C

SYMBOL	IRRIGATION DESCRIPTION
IR-101	IRRIGATION EQUIPMENT SHOWN OUTSIDE PLANTING AREAS FOR GRAPHIC CLARITY ONLY. EQUIPMENT SHALL BE LOCATED INSIDE PLANTING AREAS AND VALVE BOXES SHALL BE ALIGNED WITH PLANTING BEDS AND EDGE OF PAVEMENT, TYP.
IR-102	VERIFY P.O.C IN THE FIELD, SEE CIVIL PLANS FOR WATER METER LOCATION. P.O.C. TO BE 1 1/2 INCHES.
IR-103	PEDESTAL MOUNT CONTROLLER, COORDINATE WITH ELECTRICAL CONNECTIONS FOR 120V POWER. POWER MUST BE METERED FOR ALL CONTROLLERS.
IR-104	RAIN SENSOR, SEE SHEET L.R502 DETAIL B
IR-105	EXISTING SECONDARY IRRIGATION WATER SUPPLY, SEE CIVIL PLANS FOR DETAILS.
IR-106	1 1/2 INCH P.O.C. NOT USED IN CURRENT IRRIGATION PLANS; FOR FUTURE USE ONLY.

CRITICAL ANALYSIS | D

Generated:	2014-06-11	Generated:	2014-08-13
P.O.C. NUMBER.01		P.O.C. NUMBER.02	
Water Source Information:		Water Source Information:	
FLOW AVAILABLE		FLOW AVAILABLE	
Point of Connection Size:	1-1/2"	Point of Connection Size:	1-1/2"
Flow Available:	47.66 gpm	Flow Available:	47.66 gpm
PRESSURE AVAILABLE		PRESSURE AVAILABLE	
Static Pressure at POC:	50.00 psi	Static Pressure at POC:	100.00 psi
Pressure Available:	50.00 psi	Pressure Available:	100.00 psi
DESIGN ANALYSIS		DESIGN ANALYSIS	
Maximum Station Flow:	34.50 gpm	Maximum Station Flow:	7.16 gpm
Flow Available at POC:	47.66 gpm	Flow Available at POC:	47.66 gpm
Residual Flow Available:	13.16 gpm	Residual Flow Available:	40.50 gpm
Critical Station:	7	Critical Station:	12
Design Pressure:	30.00 psi	Design Pressure:	30.00 psi
Elevation Loss:	0.00 psi	Elevation Loss:	0.00 psi
Friction Loss:	5.76 psi	Friction Loss:	4.32 psi
Fittings Loss:	0.58 psi	Fittings Loss:	0.43 psi
Loss through Valve:	3.56 psi	Loss through Valve:	2.37 psi
Pressure Req. at Critical Station:	39.88 psi	Pressure Req. at Critical Station:	37.12 psi
Loss for Fittings:	0.36 psi	Loss for Fittings:	0.00 psi
Loss for Main Line:	3.58 psi	Loss for Main Line:	0.02 psi
Loss for POC to Valve Elevation:	0.00 psi	Loss for POC to Valve Elevation:	0.00 psi
Loss for Backflow:	0.00 psi	Loss for Backflow:	0.00 psi
Loss for Master Valve:	3.56 psi	Loss for Master Valve:	3.90 psi
Critical Station Pressure at POC:	47.38 psi	Critical Station Pressure at POC:	41.04 psi
Pressure Available:	50.00 psi	Pressure Available:	100.00 psi
Residual Pressure Available:	2.62 psi	Residual Pressure Available:	58.96 psi

SCALE & N. ARROW | F

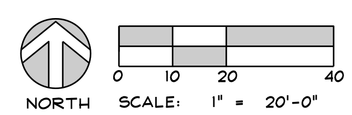

KEYPLAN | E

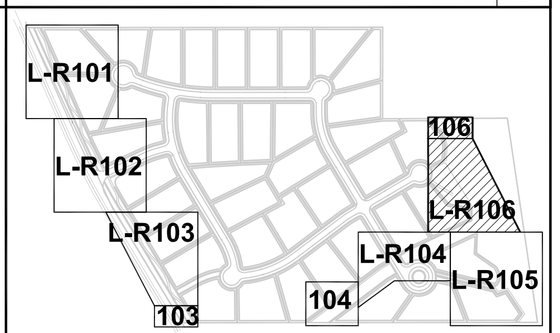

Arc Sitio Design, Inc
Landscape Architecture & Architectural Site Design
1058 East 2100 South
Salt Lake City, Utah 84106
office 801 . 487 . 4923
fax 801 . 466 . 3046
www.arcsitiodesign.com

consultant:

project

Sail House Development

Saratoga Springs, UT

date

SEPTEMBER 22, 2014

revisions

data

asd project no: 14027

title

IRRIGATION PLAN

sheet

L-R106

File : E:\14027_Soil House\Cadd\rrigation.dwg Sep 22, 2014-11:23am

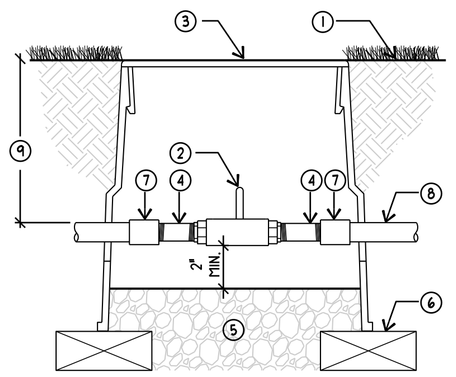

1. SET FLUSH TO FINISH GRADE/TOP OF MULCH
2. ISOLATION BALL VALVE WITH HANDLE TURNED UPWARD (SEE IRRIGATION LEGEND)
3. CARSON/BROOKS 910-10 VALVE BOX (LOCATION MUST BE APPROVED BY OWNER'S REPRESENTATIVE PRIOR TO INSTALLATION).
4. PVC SCH 80 NIPPLE (LENGTH AS REQUIRED)
5. 6-INCH MINIMUM DEPTH OF 3/4-INCH WASHED AGGREGATE
6. BRICK FOUNDATION
7. PVC SCH 80 SLIP X THREAD COUPLING (SAME SIZE AS MAINLINE PIPING)
8. MAINLINE PIPING (SIZE AS PER PLAN)
9. FOR TRENCH DEPTHS (SEE TRENCHING AND SLEEVING DETAIL)

NOTES:
1. IF POSSIBLE, LOCATE FILTER ASSEMBLY IN PLANTER BED. LOCATION TO BE APPROVED BY THE OWNER'S REPRESENTATIVE
2. INSTALL FILTER PER MANUFACTURER'S SPECIFICATIONS.
3. ALL BURIED BOLTS SHALL BE STAINLESS STEEL.
4. USE SCHEDULE 80 PIPE AND FITTINGS ABOVE GROUND

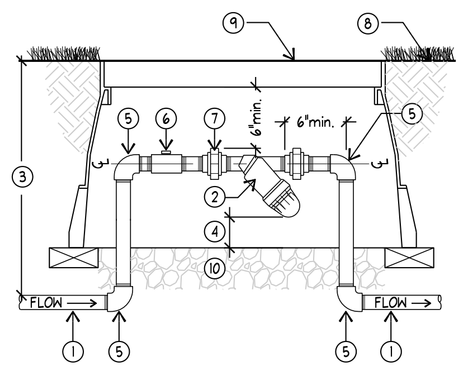

1. MAINLINE PIPING (SIZE AS PER PLAN)
2. IN-LINE FILTER (SEE IRRIGATION LEGEND).
3. FOR TRENCH DEPTHS (SEE TRENCHING AND SLEEVING DETAIL)
4. ENSURE THAT MINIMUM CLEARANCE IS MAINTAINED FOR PROPER MAINTENANCE OF FILTER
5. PVC SCH. 80 T X T ELBOW
6. ISOLATION BALL VALVE (SEE IRRIGATION SCHEDULE)
7. PVC SCH. 80 UNION (BOTH SIDES OF FILTER)
8. SET FLUSH TO FINISH GRADE/TOP OF MULCH
9. CARSON BROOKS VALVE BOX (SIZE APPROPRIATELY) WITH EXTENSIONS, IF NEEDED (LOCATION MUST BE APPROVED BY OWNER'S REPRESENTATIVE PRIOR TO INSTALLATION).
10. 12-INCH MINIMUM DEPTH OF 3/4-INCH WASHED AGGREGATE

G ISOLATION BALL VALVE ASSEMBLY

SCALE: NTS SECTION

E FILTER ASSEMBLY

SCALE: 3/4"=1'-0" SECTION

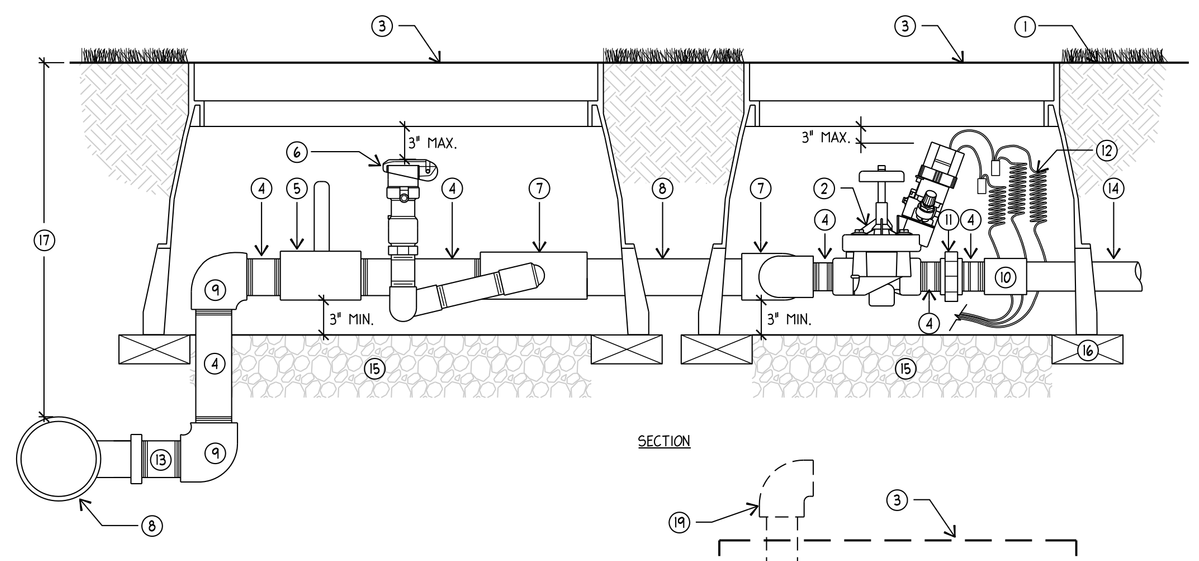

SECTION

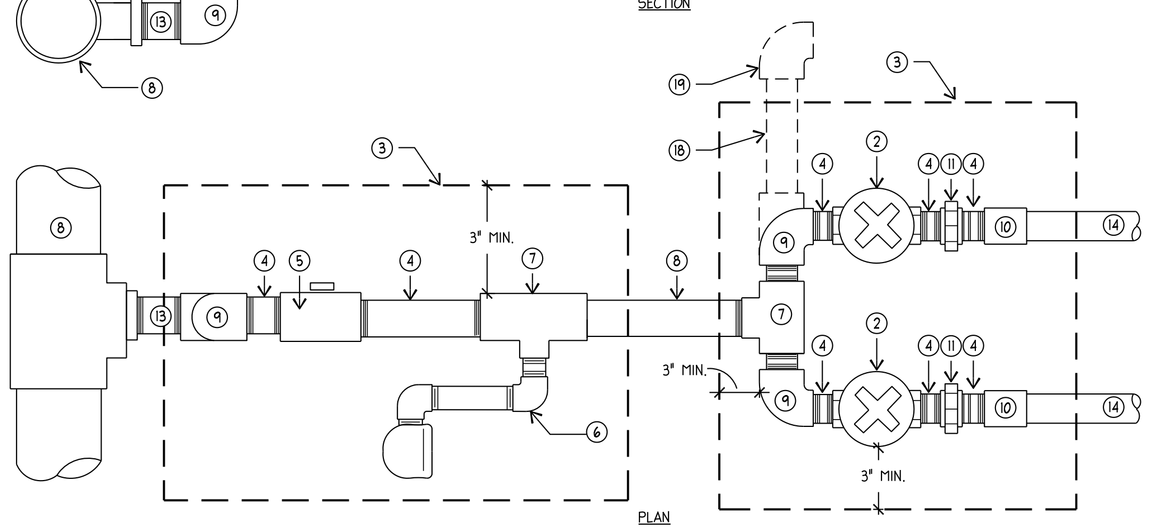

PLAN

NOTES:
1. LOCATE ALL VALVE BOXES IN PLANTER BEDS UNLESS OTHERWISE INDICATED.
2. ALL FITTINGS AND NIPPLES IN MANIFOLD SHALL BE SCH. 80 THREADED PVC USING TEFLON TAPE.
3. VALVE MANIFOLD TO BE INSTALLED GOING AWAY FROM MAIN SUPPLY LINE. MINIMUM OF 1 FOOT BEFORE CHANGE IN DIRECTION.
4. CUT ALL VALVE BOXES AS REQUIRED SO BOXES DO NOT SIT ON PIPING.

F ELECTRIC REMOTE-CONTROL VALVE ASSEMBLY

SCALE: NTS SECTION/PLAN

1. SET FLUSH TO FINISH GRADE/TOP OF MULCH
2. ELECTRIC REMOTE-CONTROL VALVE (SEE IRRIGATION LEGEND)
3. VALVE BOX (SEE SPECS). LOCATION MUST BE APPROVED BY OWNER'S REPRESENTATIVE PRIOR TO INSTALLATION.
4. PVC SCH 80 NIPPLE (LENGTH AS REQUIRED)
5. ISOLATION BALL VALVE WITH HANDLE TURNED UPWARDS (SEE IRRIGATION LEGEND)
6. QUICK COUPLER VALVE (SEE IRRIGATION LEGEND AND DETAIL)
7. PVC SCH 80 TEE T X T X S (SAME SIZE AS MAINLINE PIPING)
8. MAINLINE PIPING (SIZE AS PER PLAN)
9. PVC SCH. 80 T X T ELBOW
10. PVC SCH. 80 T X S COUPLING
11. PVC SCH. 80 UNION
12. CONTROL WIRES- 30-INCH LINEAR LENGTH OF WIRE, COILED
13. PVC SCH 80 NIPPLE WITH BUSHING (LENGTH AS REQUIRED)
14. LATERAL PIPING (SIZE AS PER PLAN)
15. 6-INCH MINIMUM DEPTH OF 3/4-INCH WASHED AGGREGATE
16. BRICK FOUNDATION, TYP.
17. FOR TRENCH DEPTHS (SEE TRENCHING AND SLEEVING DETAIL)
18. PVC SCH 80 PIPE (LENGTH AS REQUIRED)
19. EXTEND FOR NUMBER OF VALVES REQUIRED

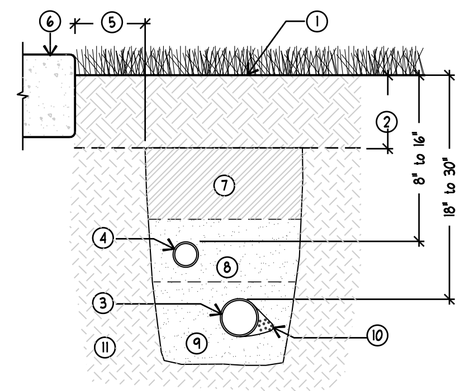

1. FINISH GRADE/TOP OF MULCH
2. TOPSOIL LAYER - SEE SPECS
3. MAINLINE PIPING (SIZE AS PER PLAN)
4. LATERAL PIPING (SIZE AS PER PLAN)
5. LOCATE ALL TRENCHES 12" AWAY FROM ALL BUILDINGS, SIDEWALKS OR ANY HARD SURFACES
6. TOP OF HARDSCAPE
7. CLEAN BACKFILL- SEE SPECS.
8. SAND- IN CASES WHERE LATERAL PIPING IS INSTALLED IN MAINLINE TRENCH, USE SAND TO BACKFILL TRENCH
9. SAND- USE SAND TO A DEPTH OF 2" BELOW AND TO THE EITHER SIDE OF PIPING TO BED ALL PVC PIPING AND ELECTRICAL WIRES
10. ELECTRICAL WIRES- ATTACH CONTROL WIRES TO EITHER SIDE OF MAIN LINE WITH DUCT TAPE AT 15 FEET O.C.
11. COMPACTED SUBGRADE

NOTE:
1. SETTLE ALL TRENCHES WITH WATER PRIOR TO INSTALLATION OF TOPSOIL.

B TRENCHING

SCALE: NTS SECTION

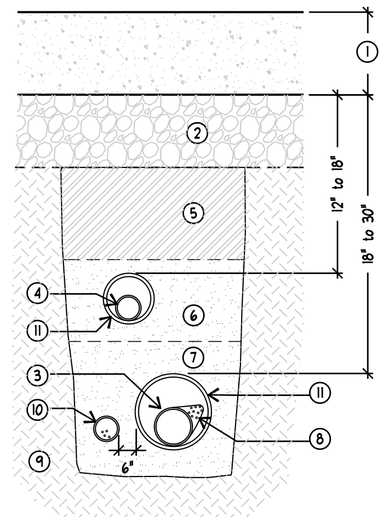

1. HARDSCAPE PAVING
2. COMPACTED AGGREGATE SUB-BASE
3. MAINLINE PIPING
4. LATERAL PIPING
5. CLEAN BACKFILL- SEE SPECS.
6. SAND- IN CASES WHERE LATERAL PIPING IS INSTALLED IN MAINLINE TRENCH, USE SAND TO BACKFILL TRENCH
7. SAND- USE SAND TO A DEPTH OF 2" BELOW AND TO THE EITHER SIDE OF SLEEVING
8. ELECTRICAL WIRES- ATTACH CONTROL WIRES TO EITHER SIDE OF MAIN LINE WITH DUCT TAPE AT 15 FEET O.C.
9. COMPACTED SUBGRADE
10. ELECTRICAL CONDUIT
11. SLEEVING:
    -SLEEVES SHALL BE TWICE THE NOMINAL SIZE OF THE PIPE WITHIN
    -SLEEVES 4" AND SMALLER SHALL BE CLASS 315 PVC
    -SLEEVES 4" AND GREATER SHALL BE PVC SEWER PIPE

NOTE:
1. SETTLE ALL TRENCHES WITH WATER PRIOR TO INSTALLATION OF TOPSOIL.
2. WHEN MULTIPLE PIPES OCCUR IN ONE TRENCH, ADD REQUIRED SLEEVE SIZES TOGETHER FOR 1 SLEEVE SIZE.
3. EXTEND ALL SLEEVING 12" MIN. BEYOND EDGE OF PAVING.

C SLEEVING

SCALE: NTS SECTION

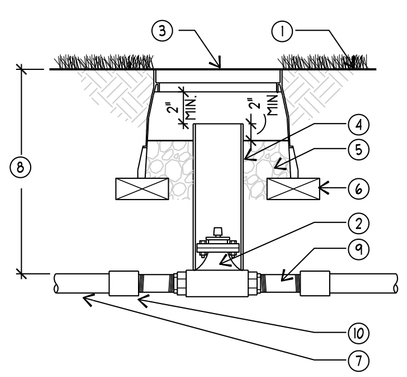

1. SET FLUSH TO FINISH GRADE/TOP OF MULCH
2. STOP AND WASTE VALVE (SEE IRRIGATION LEGEND)
3. CARSON/BROOKS 910-10 VALVE BOX (LOCATION MUST BE APPROVED BY OWNER'S REPRESENTATIVE PRIOR TO INSTALLATION).
4. 6" SCH 40 PVC SLEEVE (LENGTH AS REQUIRED). NOTCH OVER VALVE FOR STABILITY.
5. 6-INCH MINIMUM DEPTH OF 3/4-INCH WASHED AGGREGATE
6. BRICK FOUNDATION
7. MAINLINE PIPING (SIZE AS PER PLAN)
8. FOR TRENCH DEPTHS (SEE TRENCHING AND SLEEVING DETAIL)
9. PVC SCH 80 NIPPLE (LENGTH AS REQUIRED)
10. PVC SCH 80 SLIP X THREAD COUPLING (SAME SIZE AS MAINLINE PIPING)

D STOP AND WASTE ASSEMBLY

SCALE: NTS SECTION

SYMBOL	MANUFACTURER/MODEL	ARC	PSI	GPM	RAD
M	Hunter MPI000 w/ MPR40-04-CV-R	45-210	40		12'
K	Hunter MP2000 w/ MPR40-04-CV-R	45-210	40		16'
R	Hunter MP2000 w/ MPR40-04-CV-R	360	40	1.47	16'
A	Hunter MP3000 w/ MPR40-04-CV-R	360	40	3.64	25'
B	Hunter MP3000 w/ MPR40-04-CV-R	45-210	40		25'
V	Hunter MP3000 w/ MPR40-04-CV-R	210-270	40		25'
T	Hunter MP Corner w/ MPR40-04-CV-R	Adj	30		12'
S	Hunter MP Strip w/ MPR40-04-CV-R	SST	40	0.44	5'x3(

SYMBOL	MANUFACTURER/MODEL/DESCRIPTION
	Rain Bird XCZ LF-100-PRF Low Flow Drip Control Kit, 1" Low Flow Valve, 3/4" Pressure Regulating RBY Filter, and 30psi Pressure Regulator. 0.2gpm-5gpm.
	Netafim LVCZ50100075-HF Pre-Assembled Control Zone Kit, with 1" Series 80 Control Valve, 3/4" Disc Filter, and High Flow Pressure Regulator 4.5GPM to 17.6GPM.
	Area to Receive Dripline Netafim TLCV6-18(18) Landscape Dripperline with 0.6gph emitters at 18"o.c. (2.2 lph @ 0.45 m) with check valve, pressure compensation, 14.7psi min. to 50psi max. (1 to 3.5 bar). Dripperline laterals spaced at 18" (0.46 m) apart, with emitters offset for triangular pattern.

SYMBOL	MANUFACTURER/MODEL/DESCRIPTION
	Rain Bird PEB-PRS-D-NP-HAN 1", 1-1/2", 2" Plastic Industrial Valves. Low Flow Operating Capability, Globe Configuration. With Pressure Regulator Module, and Purple Flow Handle for Non-Potable Water Use.
	Rain Bird 5-NP 1" Brass Quick-Coupling Valve, with Corrosion-Resistant Stainless Steel Spring, Locking Non-Potable Purple Rubber Cover, and 1-Piece Body.
	NIBCO T-FP-600 Isolation valve. Sized equal to pipe size. Isolation valves shall be used at all vavle manifolds and isolation points.
	1 1/2" Waterous 2500 Series Resilient Wedge Gate Valve with Square Nut
MV	Rain Bird PEB-PRS-D-NP-HAN 1-1/2" 1", 1-1/2", 2" Plastic Industrial Valves. Low Flow Operating Capability, Globe Configuration. With Pressure Regulator Module, and Purple Flow Handle for Non-Potable Water Use.
MV2	Rain Bird PEB-PRS-D-NP-HAN 1-1/2" 1", 1-1/2", 2" Plastic Industrial Valves. Low Flow Operating Capability, Globe Configuration. With Pressure Regulator Module, and Purple Flow Handle for Non-Potable Water Use.
C1	Rain Bird ESP8LXME-LXMMPED with (02) ESPLXMSM4 16 Station Capable Commercial Controller. Mounted on a Powder-Coated Metal Pedestal.
C2	Rain Bird ESP8LXME-LXMMPED with (02) ESPLXMSM4 16 Station Capable Commercial Controller. Mounted on a Powder-Coated Metal Pedestal.
FS	Rain Bird FS-150-B 1-1/2" Flow Sensor for use with Rain Bird Maxicom, SiteControl, and ESP-LXD Central Control Systems. Brass Model. Suggested Operating Range of 2.0 GPM to 82.6 GPM. Sensors should be sized for flow rather than pipe size.
F	Amiad Filter: 1-1601-1151-1130 Amiad 'Super' 1-1/2" Plastic Filter with 130 micron Stainless Steel weave-wire screen filter element.
R	Rain Bird RSD-BEx Rain Sensor, with metal latching bracket, extension wire.
P.O.C.	Point of Connection 1-1/2"
P.O.C.	Point of Connection 1-1/2"
	Irrigation Lateral Line: PVC Schedule 40 PVC Schedule 40 irrigation pipe.
	Irrigation Mainline: PVC Schedule 40 PVC Schedule 40 irrigation pipe.
	Pipe Sleeve: PVC Class 200 SDR 21

Valve Callout

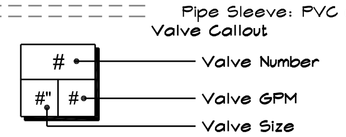

A IRRIGATION SCHEDULE

SCALE: NTS

Arc Sitio Design, Inc
Landscape Architecture & Architectural Site Design
1058 East 2100 South
Salt Lake City, Utah 84106
office 801 . 487 . 4923
fax 801 . 466 . 3046
www.arcsitiodesign.com

consultant:

project

Sail House Development

Saratoga Springs, UT

date

SEPTEMBER 22, 2014

revisions

data

asd project no: 14027

title

IRRIGATION DETAILS

sheet

L-R501

File : E:\14027_Sail House\Cadd\Irrigation.dwg Sep 22, 2014 - 10:38am

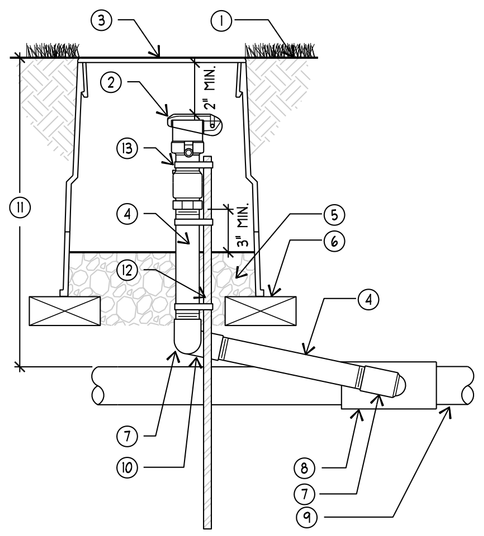

1. SET FLUSH TO FINISH GRADE/TOP OF MULCH
2. QUICK-COUPLING VALVE (SEE IRRIGATION SCEDULE)
3. 10" ROUND VALVE BOX. (LOCATION MUST BE APPROVED BY OWNER'S REPRESENTATIVE PRIOR TO INSTALLATION).
4. PVC SCH 80 NIPPLE (LENGTH AS REQUIRED)
5. 6-INCH MINIMUM DEPTH OF 3/4-INCH WASHED AGGREGATE
6. BRICK FOUNDATION
7. PVC SCH 80 STREET ELL
8. PVC SCH 80 TEE OR ELL (SAME SIZE AS MAINLINE PIPING)
9. MAINLINE PIPING (SIZE AS PER PLAN)
10. PVC SCH 80 ELL
11. FOR TRENCH DEPTHS (SEE TRENCHING AND SLEEVING DETAIL)
12. #4 REBAR - 24" MIN. LENGTH
13. STAINLESS STEEL SCREW CLAMP

NOTE:
1. FURNISH FITTINGS AND PIPING NOMINALLY SIZED IDENTICAL TO NOMINAL QUICK COUPLING VALVE INLET SIZE.

J QUICK COUPLER VALVE ASSEMBLY
SCALE: NTS — SECTION

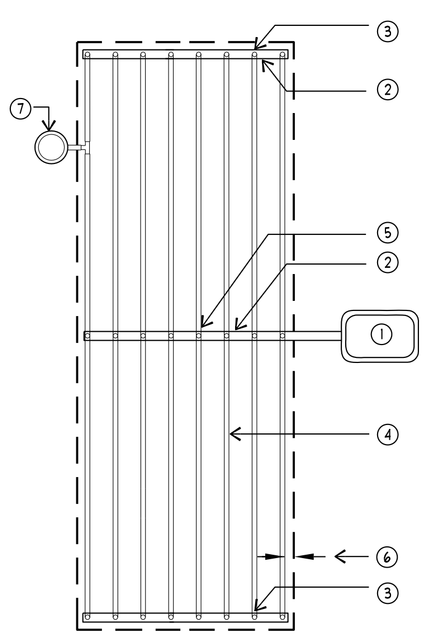

1. ELECTRIC REMOTE CONTROL VALVE WITH DISC FILTER AND PRV - REFER TO IRRIGATION SCHEDULE
2. DRIPLINE START CONNECTION MALE ADAPTER - SEE DETAIL
3. 1" PVC EXHAUST HEADER OR FOOTER, NO SMALLER THAN 1"
4. DRIPLINE TUBING - REFER TO IRRIGATION SCHEDULE TYPE AND SPACING
5. 1" PVC SUPPLY EXHAUST PIPE, NO SMALLER THAN 1"
6. PERIMETER LATERALS 2" TO 4" FROM EDGE
7. MANUAL LINE FLUSHING VALVE - SEE SHT. L-R504 DTL. C. PLACE MANUAL LINE FLUSHING VALVES AT EACH DEAD END, AND LOW POINT IN THE SYSTEM.

NOTES:
1. SOIL STAPLES: ANCHOR THE DRIP TUBING WITH STAINLESS STEEL SOIL STAPLES EVERY 4 FEET. USE TWO SOIL STAPLES AT EACH TEE, ELBOW OR CROSS.

G DRIPLINE TYPICAL PLANTER LAYOUT
SCALE: NTS — PLAN

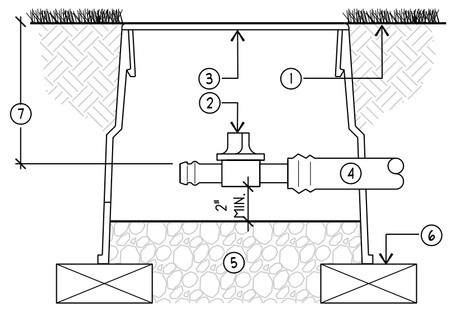

1. SET FLUSH TO FINISH GRADE/TOP OF MULCH
2. LINE FLUSHING VALVE - NETAFIM TLSOV
3. 10 INCH ROUND VALVE BOX
4. DRIPLINE TUBING
5. 12-INCH MINIMUM DEPTH OF 1-INCH WASHED AGGREGATE
6. BRICK FOUNDATION
7. FOR TRENCH DEPTHS SEE TRENCHING DETAIL

NOTES:
1. PLACE MANUAL LINE FLUSHING VALVES AT EACH DEAD END, AND LOW POINT IN THE SYSTEM.

D MANUAL LINE FLUSHING VALVE ASSEMBLY
SCALE: NTS — SECTION

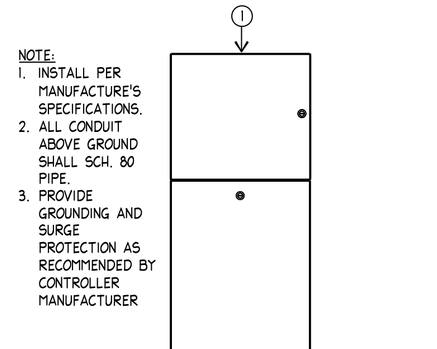

NOTE:
1. INSTALL PER MANUFACTURE'S SPECIFICATIONS.
2. ALL CONDUIT ABOVE GROUND SHALL SCH. 80 PIPE.
3. PROVIDE GROUNDING AND SURGE PROTECTION AS RECOMMENDED BY CONTROLLER MANUFACTURER

1. IRRIGATION CONTROLLER ON PEDESTAL (SEE IRRIGATION SCHEDULE)
2. POWER CONDUIT (NOT SUPPLIED) FOR LINE FEED INTO METER
3. GROUND WIRE SCH. 80 CONDUIT, MIN. 1 1/2". GROUND PER MANUFACTURER & ASIC GUIDELINES
4. 120V POWER SUPPLY BY OTHERS. CONTRACTOR SHALL COORDINATE 120 VAC ELECTRICAL SUPPLY AND MAKE FINAL CONNECTIONS TO THE CONTROLLER
5. 1-1/4", 1-1/2" OR 2" PVC SCH 80 CONDUIT AND LONG SWEEP ELL FOR 2-WIRE CABLE. INSTALL ONE EXTRA ELL FOR FUTURE USE.
6. 2-WIRE PATH TO DECODERS. USE A DIFFERENT CABLE JACKET COLOR FOR EACH PATH. INSTALL WIRING IN 1" CONDUIT BETWEEN VALVE BOXES.
7. 6" MIN. ROAD BASE
8. POURED CONCRETE BASE, 6" MIN. THICKNESS, EXTEND 6" BEYOND OUTSIDE DIMENSIONS OF ENCLOSURE WITH 0.5% MIN. SLOPE FOR DRAINAGE
9. FINISH GRADE
10. SUBGRADE COMPACTED TO 95%
11. 3/4" SCH. 80 CONDUIT FOR COMMUNICATIONS WIRE

A IRRIGATION CONTROLLER - PEDESTAL MOUNT
SCALE: NTS — SECTION/ELEVATION

NUMBER	MODEL	SIZE	TYPE	PSI	PSI @ POC	GPM	PRECIP
1	Rain Bird PEB-PRS-D-NP-HAN	1-1/2"	Turf Rotary	49.21		30.44	0.71 in/h
2	Rain Bird PEB-PRS-D-NP-HAN	1-1/2"	Turf Rotary	48.77		30.69	0.67 in/h
3	Rain Bird PEB-PRS-D-NP-HAN	1-1/2"	Turf Rotary	47.65		29.00	0.64 in/h
4	Rain Bird PEB-PRS-D-NP-HAN	1-1/2"	Turf Rotary	48.99		30.90	0.68 in/h
5	Rain Bird PEB-PRS-D-NP-HAN	1-1/2"	Turf Rotary	49.28		31.12	0.71 in/h
6	Rain Bird PEB-PRS-D-NP-HAN	1-1/2"	Turf Rotary	48.29		32.76	0.66 in/h
7	Rain Bird PEB-PRS-D-NP-HAN	1-1/2"	Turf Rotary	48.48		30.94	0.66 in/h
8	Rain Bird PEB-PRS-D-NP-HAN	1-1/2"	Turf Rotary	49.53		30.71	0.66 in/h
9	Netafim LVCZSB0100075-HF	1"	Area for Dripline	34.64		8.37	0.45 in/h
10	Netafim LVCZSB0100075-HF	1"	Area for Dripline	37.11	41.04	10.82	0.45 in/h
11	Rain Bird PEB-PRS-D-NP-HAN	1-1/2"	Turf Rotary	50.08		31.65	0.71 in/h
12	Rain Bird PEB-PRS-D-NP-HAN	1-1/2"	Turf Rotary	47.34		30.96	0.40 in/h
13	Rain Bird PEB-PRS-D-NP-HAN	1-1/2"	Turf Rotary	49.69		32.72	0.56 in/h
14	Rain Bird PEB-PRS-D-NP-HAN	1-1/2"	Turf Rotary	47.76		33.54	0.35 in/h
15	Rain Bird PEB-PRS-D-NP-HAN	1-1/2"	Turf Rotary	48.75		31.33	0.41 in/h
16	Rain Bird XCZ LF-100-PRF	1"	Area for Dripline	33.81		2.18	0.45 in/h

K VALVE-SCHEDULE
SCALE: NRS — SCHEDULE

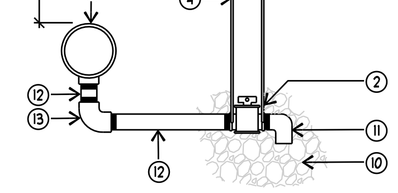

1. SET FLUSH TO FINISH GRADE/TOP OF MULCH
2. MANUAL DRAIN VALVE (SEE IRRIGATION LEGEND)
3. CARSON/BROOKS 910-10 VALVE BOX (LOCATION MUST BE APPROVED BY OWNER'S REPRESENTATIVE PRIOR TO INSTALLATION).
4. 4" SCH 40 PVC SLEEVE (LENGTH AS REQUIRED). NOTCH OVER VALVE FOR STABILITY.
5. 6-INCH MINIMUM DEPTH OF 3/4-INCH WASHED AGGREGATE
6. BRICK FOUNDATION
7. MAINLINE PIPING (SIZE AS PER PLAN)
8. FOR TRENCH DEPTHS (SEE TRENCHING AND SLEEVING DETAIL)
9. WEATHERMATIC 9066 LOCKING VALVE CAP WITH A RLK-1 KEY
10. GRAVEL SUMP- 18" DIA. X 12" DEEP
11. SCH. 80 PVC STREET ELL TURNED DOWNWARDS
12. PVC SCH 80 NIPPLE (LENGTH AS REQUIRED)
13. PVC SCH 80 ELL

NOTES:
1. ALL LINES SHALL SLOPE TO MANUAL DRAIN. IF FIELD CONDITIONS NECESSITATE ADDITIONAL DRAINS, THESE DRAINS SHALL BE INSTALLED FOR COMPLETE DRAINAGE OF THE ENTIRE SYSTEM.

H MAINLINE DRAIN ASSEMBLY
SCALE: NTS — SECTION

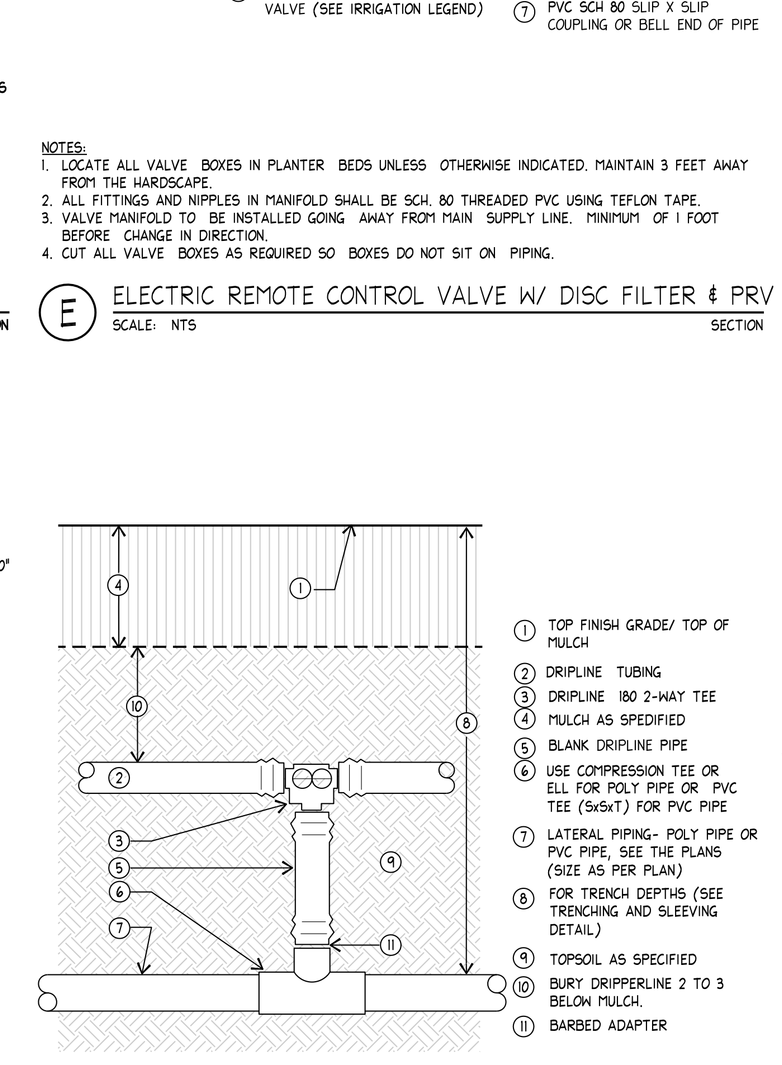

1. CONTROL WIRES- 30-INCH LINEAR LENGTH OF WIRE, COILED
2. LATERAL PIPING (SIZE AS PER PLAN)
3. 6-INCH MINIMUM DEPTH OF 1-INCH WASHED AGGREGATE
4. BRICK FOUNDATION, TYP.
5. FOR TRENCH DEPTHS (SEE TRENCHING AND SLEEVING DETAIL.)
6. PVC SCH. 80 UNION
7. DISK FILTER (SEE IRRIGATION SCHEDULE)
8. PVC SCH. 80 NIPPLE; LENGTH AS REQUIRED (TYP.)
9. INLINE PRESSURE REGULATOR VALVE (SEE IRRIGATION LEGEND)
10. SET FLUSH TO FINISH GRADE/TOP OF MULCH
11. ELECTRIC REMOTE-CONTROL VALVE (SEE IRRIGATION SCHEDULE)
12. VALVE BOX (SEE SPECS.)
13. PVC SCH 80 TOE NIPPLE WITH SXS FITTING (LENGTH AS REQUIRED)
14. ISOLATION BALL VALVE (SEE IRRIGATION SCHEDULE) ASSOCIATE WITH VALVE MANIFOLDS AS INDICATED ON THE PLANS
15. MAINLINE PIPING (SIZE AS PER PLAN)
16. PVC SCH 80 SLIP X SLIP COUPLING OR BELL END OF PIPE

NOTES:
1. LOCATE ALL VALVE BOXES IN PLANTER BEDS UNLESS OTHERWISE INDICATED. MAINTAIN 3 FEET AWAY FROM THE HARDSCAPE.
2. ALL FITTINGS AND NIPPLES IN MANIFOLD SHALL BE SCH. 80 THREADED PVC USING TEFLON TAPE.
3. VALVE MANIFOLD TO BE INSTALLED GOING AWAY FROM MAIN SUPPLY LINE. MINIMUM OF 1 FOOT BEFORE CHANGE IN DIRECTION.
4. CUT ALL VALVE BOXES AS REQUIRED SO BOXES DO NOT SIT ON PIPING.

E ELECTRIC REMOTE CONTROL VALVE W/ DISC FILTER & PRV
SCALE: NTS — SECTION

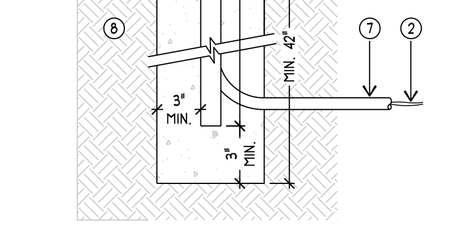

1. RAIN GAUGE - SEE IRRIGATION LEGEND. MOUNT GAUGE A MIN. OF 8ft. ABOVE FINISH GRADE, & IN LOCATION APPROVED BY THE LANDSCAPE ARCHITECT THAT OPTOMIZES RAIN WATER COLLECTION
2. CONTRACTOR SHALL SUPPLY WIRE AS RECOMMENDED BY THE MANUFACTURER AND CONNECT TO ET-MANAGER (ETM1) LOCATED IN MAINTENANCE OFFICE (LOWER-LEVEL OF PARKING STRUCTURE). COORDINATE INSTALLATION WITH PARKING STRUCTURE CONTRACTOR
3. 1 1/2" GALV. POST. SET IN CONCRETE AND PLUMBED
4. CONDUIT "U" CLAMP
5. CONCRETE FOOTING SLOPED AROUND POST
6. TOP OF FINISH GRADE
7. 1" CONDUIT TO SOLAR SYNC, FLOW SENSOR AND/OR WIND SENSOR FROM CONTROLLER
8. COMPACTED SUB-GRADE

NOTE:
1. INSTALL PER MANUFACTURE'S SPECIFICATIONS.

B RAIN SENSOR
SCALE: NTS — ELEVATION

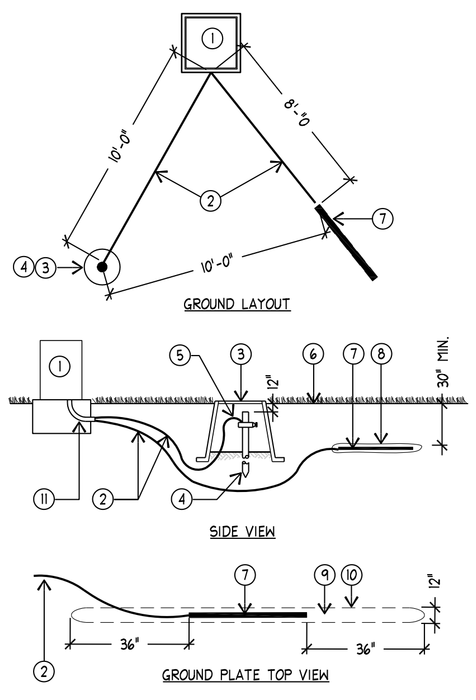

1. IRRIGATION CONTROLLER, SEE IRRIGATION SCHEDULE
2. SOLID BARE COPPER WIRE (#6 AWG) FROM GROUNDING ROD OR GROUNDING PLATE TO CONTROLLER ASSEMBLY. MAKE WIRE AS SHORT AND STRAIGHT AS POSSIBLE
3. COVER GROUNDING ROD WITH #10 ROUND VALVE BOX AS SHOWN
4. 5/8-INCH X 10 FT COPPER CLAD GROUNDING ROD.
5. CADWELD CONNECTION
6. FINISH GRADE
7. COPPER GROUND PLATE (4" X 96" X .0625") ATTACHED TO #6 AWG BARE COPPER WIRE W/ CADWELD CONNECTION OR APPROVED EQUAL
8. EARTH CONTACT MATERIAL
9. DO NOT INSTALL ANY OTHER WIRES OR CABLE WITHIN THE SPHERE OF INFLUENCE
10. ELECTRODE SPHERE OF INFLUENCE BOUNDARIES
11. PLASTIC SWEEP ELL (1 1/2" OR LARGER)

NOTE:
1. INSTALL PER MANUFACTURE'S SPECIFICATIONS.
2. TEST GROUNDING 1 MONTH AFTER INSTALLATION. GROUNDING MUST ACHIEVE RESISTANCE OF TEN (10) OHMS OR LESS.

C GROUNDING GRID Y DESIGN LAYOUT
SCALE: NTS — PLAN/SECTION

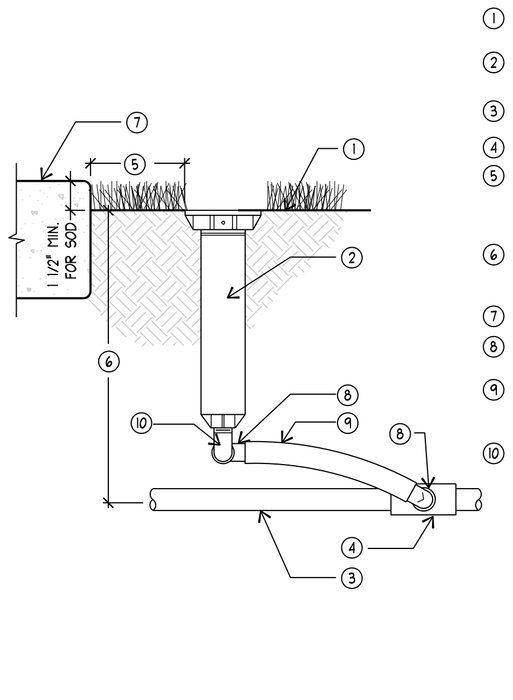

1. SET HEAD FLUSH WITH FINISH GRADE/TOP OF MULCH
2. POP-UP SPRAY HEAD (SEE IRRIGATION SCHEDULE)
3. LATERAL PIPING (SIZE AS PER PLAN)
4. PVC SCH 40 TEE OR ELL
5. ALL SPRAY HEADS TO BE PLACED 2" CLEAR OF ALL HARDSCAPE SURFACES AND 2'-0" FROM BUILDINGS
6. FOR TRENCH DEPTHS (SEE TRENCHING AND SLEEVING DETAIL)
7. TOP OF HARDSCAPE
8. 1/2-INCH SWING PIPE ELL (RAIN BIRD OR TORO)
9. 1/2-INCH POLYETHYLENE SWING PIPE, MIN. 12" OR AS LENGTH NEEDED (RAIN BIRD OR TORO)
10. 1/2-INCH MARLEX STREET ELL (RAIN BIRD OR TORO)

NOTE:
1. SWING PIPE SHALL SLOPE TOWARDS LATERAL PIPE FOR COMPLETE DRAINAGE.

I POP-UP SPRAY HEAD
SCALE: NTS — SECTION

1. TOP FINISH GRADE/ TOP OF MULCH
2. DRIPLINE TUBING
3. DRIPLINE 180 2-WAY TEE
4. MULCH AS SPEDIFIED
5. BLANK DRIPLINE PIPE
6. USE COMPRESSION TEE OR ELL FOR POLY PIPE OR PVC TEE (SxSxT) FOR PVC PIPE
7. LATERAL PIPING- POLY PIPE OR PVC PIPE, SEE THE PLANS (SIZE AS PER PLAN)
8. FOR TRENCH DEPTHS (SEE TRENCHING AND SLEEVING DETAIL)
9. TOPSOIL AS SPECIFIED
10. BURY DRIPPERLINE 2 TO 3 BELOW MULCH.
11. BARBED ADAPTER

F DRIPLINE START CONNECTION
SCALE: NTS — SECTION

Arc Sitio Design, Inc
Landscape Architecture & Architectural Site Design
1058 East 2100 South
Salt Lake City, Utah 84106
office 801 . 487 . 4923
fax 801 . 466 . 3046
www.arcsitiodesign.com

consultant:

project
Sail House Development
Saratoga Springs, UT

date
SEPTEMBER 22, 2014

revisions

data
asd project no: 14027

title
IRRIGATION DETAILS

sheet
L-R502

File : E:\14027_Sail House\Cadd\Irrigation.dwg Sep 22, 2014 - 10:37am