SARATOGA SPRINGS

Life's just better here

1. 2020-05-14 Pc Agenda

   Documents:

   2020-05-14 PC AGENDA.PDF

2. 2020-05-14 Pc Packet

   Documents:

   2020-05-14 PC PACKET.PDF

3. 2020-05-14 Pc Approved Minutes

   Documents:

   2020-05-14 PC APPROVED MINUTES.PDF

AGENDA – Planning Commission Meeting

Planning Commissioner Troy Cunningham, Chair
Planning Commissioner Ken Kilgore – Vice Chair
Planning Commissioner Bryce Anderson
Planning Commissioner Audrey Barton
Planning Commissioner Reed Ryan
Planning Commissioner Josh Wagstaff

CITY OF SARATOGA SPRINGS
Thursday, May 14, 2020, 6:00 pm
City of Saratoga Springs 1307 North Commerce Drive, Suite 200, Saratoga Springs, UT 84045
https://www.youtube.com/c/CityofSaratogaSprings

Pursuant to State and Federal Guidelines concerning COVID-19, this Meeting will be conducted electronically.
Questions and comments to Staff and/or Commissioners may be submitted to comments@saratogaspringscity.com

1. Pledge of Allegiance.
2. Roll Call.
3. Public Hearing: Rezone from Regional Commercial to Planned Community and General Plan amendment from Office Warehouse and Regional Commercial to Planned Community for Wildflower Commercial located at SR-73 and Mountain View Corridor. DAI as applicant.
4. Public Hearing: Engineering Standards and Specifications Update. City initiated.
5. Public Hearing: Code Amendment for Title 18 – Flood Plain. City initiated. **(Item to be continued.)**
6. Approval of Minutes: April 23, 2020.
7. Reports of Action.
8. Commission Comments.
9. Director's Report.
10. Possible motion to enter into closed session for the purchase, exchange, or lease of property; pending or reasonably imminent litigation; the character, professional competence, or the physical or mental health of an individual; or the deployment of security personnel, devices, or systems.
11. Adjourn.

PLEASE NOTE: The order of items may be subject to change with the order of the planning commission chair. One or more members of the Commission may participate electronically via video or telephonic conferencing in this meeting.

In compliance with the Americans with Disabilities Act, individuals needing special accommodations (including auxiliary communicative aids and services) during this meeting should notify the City Recorder at 801.766.9793 at least one day prior to the meeting.

AGENDA – Planning Commission Meeting

Planning Commissioner Troy Cunningham, Chair
Planning Commissioner Ken Kilgore – Vice Chair
Planning Commissioner Bryce Anderson
Planning Commissioner Audrey Barton
Planning Commissioner Reed Ryan
Planning Commissioner Josh Wagstaff

CITY OF SARATOGA SPRINGS
Thursday, May 14, 2020, 6:00 pm
City of Saratoga Springs 1307 North Commerce Drive, Suite 200, Saratoga Springs, UT 84045
https://www.youtube.com/c/CityofSaratogaSprings

Pursuant to State and Federal Guidelines concerning COVID-19, this Meeting will be conducted electronically.
Questions and comments to Staff and/or Commissioners may be submitted to comments@saratogaspringscity.com

1. Pledge of Allegiance.
2. Roll Call.
3. Public Hearing: Rezone from Regional Commercial to Planned Community and General Plan amendment from Office Warehouse and Regional Commercial to Planned Community for Wildflower Commercial located at SR-73 and Mountain View Corridor. DAI as applicant.
4. Public Hearing: Engineering Standards and Specifications Update. City initiated.
5. Public Hearing: Code Amendment for Title 18 – Flood Plain. City initiated. **(Item to be continued.)**
6. Approval of Minutes: April 23, 2020.
7. Reports of Action.
8. Commission Comments.
9. Director's Report.
10. Possible motion to enter into closed session for the purchase, exchange, or lease of property; pending or reasonably imminent litigation; the character, professional competence, or the physical or mental health of an individual; or the deployment of security personnel, devices, or systems.
11. Adjourn.

PLEASE NOTE: The order of items may be subject to change with the order of the planning commission chair. One or more members of the Commission may participate electronically via video or telephonic conferencing in this meeting.

In compliance with the Americans with Disabilities Act, individuals needing special accommodations (including auxiliary communicative aids and services) during this meeting should notify the City Recorder at 801.766.9793 at least one day prior to the meeting.

SARATOGA SPRINGS PLANNING

Planning Commission Staff Report

Rezone and General Plan Amendment
Wildflower Commercial
May 14, 2020
Public Hearing

Report Date:	Thursday, May 7, 2020
Applicant:	DAI Utah, Nate Shipp and Dan Herzog
Owner:	Collins One LLC; CLH Holdings LLC; and Collins Brothers Land Development LLC
Location:	Northwest corner of Mountain View Corridor and SR-73
Major Street Access:	Mountain View Corridor and SR-73
Parcel Number(s) & Size:	58:033:0498, 64.60 acres; 58:033:0504, 4.19 acres; and 58:033:0505, 50.27 acres
Parcel Zoning:	Regional Commercial (RC)
Adjacent Zoning:	Planned Community (PC), Agricultural (A), and RC
Current Use of Parcel:	Undeveloped
Adjacent Uses:	Undeveloped, future PC Business Park, future multi-family residential
Previous Meetings:	11/14/19 – Planning Commission recommended Community Plan approval 12/17/19 – City Council conditional approval of MDA Amendment 4/14/20 – City Council conditional approval of amended Community Plan
Previous Approvals:	2/24/2015 – Wildflower Community Plan, Master Plan Agreement, General Plan Amendment, and Rezone approved 4/21/2015 – Springs Annexation, General Plan Amendment, and Rezone approved 11/15/2016 – Wildflower Community Plan Amendment approved
Type of Action:	Legislative
Land Use Authority:	City Council
Future Routing:	City Council
Author:	Tippe Morlan, AICP, Senior Planner

A. Executive Summary:

This is a request to modify the land use and zoning designations for the commercial property within the Wildflower Development as outlined in Section C of this report and in the attachments. These changes are in line with the amended Wildflower Community Plan which was conditionally approved at the April 14, 2020 City Council meeting.

Recommendation:

Staff recommends that the Planning Commission conduct a public hearing, take public comment, review and discuss the proposal, and choose from the options in Section "H" of this report. Options include recommendations to the City Council for approval or denial or continuance.

Tippe Morlan, AICP, Senior Planner
tmorlan@saratogaspringscity.com
1307 North Commerce Drive, Suite 200 • Saratoga Springs, Utah 84045
801-766-9793 x116 • 801-766-9794 fax

B. **Background:** When the original Wildflower Community Plan was approved in 2015, approximately 200 acres of commercial property to the south of the development was designated to be subject to the City's Regional Commercial zone. The latest amendment to the Community Plan requests that the commercial property now be incorporated into the Community Plan requiring the land use and zone designations to be changed to Planned Community.

Specific Request: The applicant is requesting a rezone and general plan amendment for 120.37 acres of commercial property within the Wildflower Development. The rezone and general plan amendment requests require a public hearing with the Planning Commission and a recommendation to the City Council.

ZONING MAP

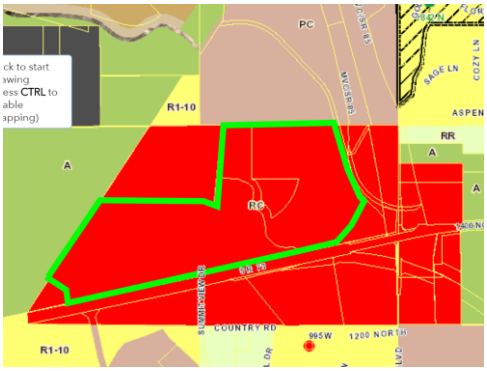

LAND USE MAP

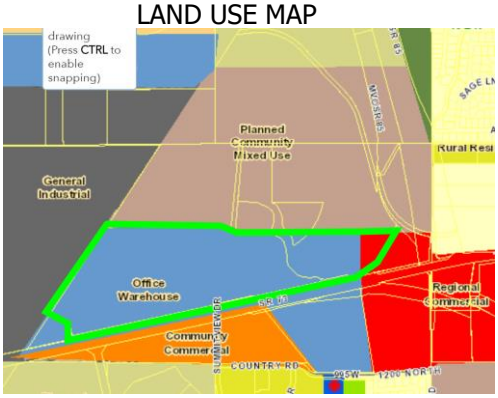

This property is located in the southeastern portion of the overall project area and was originally designated with Regional Commercial zoning when the Community Plan was first approved. With the latest amendment to the Community Plan incorporating the Springs Development into the Wildflower plan, the applicant also chose to formally incorporate the commercial area into the plan. The applicant intends to develop a Business Park compatible with several commercial zones rather than a Regional Commercial shopping center in this location. Several potential zones have been identified for the future commercial uses (see Exhibit A), and details will be finalized with each respective Village Plan submittal.

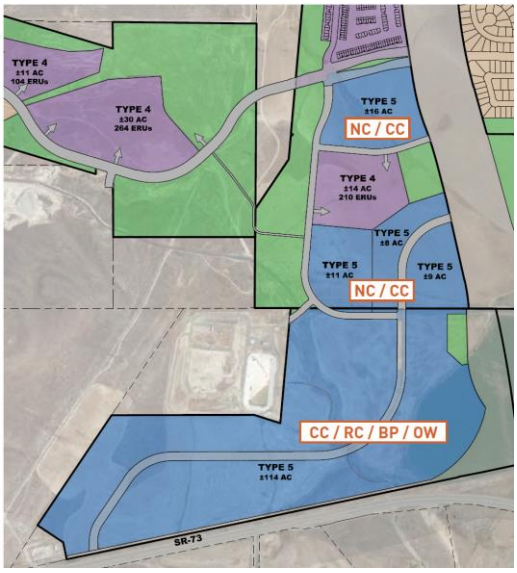

The applicant did request a zone change and general plan amendment concurrent with the Community Plan amendment; however, this was only to incorporate the Springs property into the Planned Community zone. This application is required because the commercial property was not included in the previous request.

Tippe Morlan, AICP, Senior Planner
tmorlan@saratogaspringscity.com
1307 North Commerce Drive, Suite 200 • Saratoga Springs, Utah 84045
801-766-9793 x116 • 801-766-9794 fax

C. Process:

General Plan Amendment and Rezone: Section 19.13.04 indicates that a public hearing and recommendation is required by the Planning Commission and the City Council makes the final decision.

D. Community Review: The request to amend the General Plan and Zoning Map has been noticed as a public hearing in the *Daily Herald,* posted on the Utah public notice website, and mailed notice sent to all property owners within 300 feet of the subject neighborhoods.

E. General Plan: The applicant requests to amend the General Plan designation on the southern portion of this property from Office Warehouse and Regional Commercial to Planned Community – Mixed Use. The northern portion of this property is already designated Planned Community – Mixed Use, and this designation is in line with the recently approved Community Plan.

Staff finding: If the proposed changes are approved, the requested Planned Community zone would be consistent with the General Plan. A General Plan Amendment is a legislative decision and the criteria for an amendment are reviewed in Section H of this report.

F. Code Criteria:

General Plan Amendment and Rezone:

Zoning Map and General Plan Amendments are a legislative action; therefore the City Council has significant discretion in making decisions to amend the land use and rezone property. The criteria in Section 19.17.04, outlined below, are not binding and may act as guidance in making a rezone decision:

> The Planning Commission and City Council shall consider, but not be bound by, the following criteria when deciding whether to recommend or grant a general plan, ordinance, or zoning map amendment:
>
> 1. the proposed change will conform to the Land Use Element and other provisions of the General Plan;
> 2. the proposed change will not decrease nor otherwise adversely affect the health, safety, convenience, morals, or general welfare of the public;
> 3. the proposed change will more fully carry out the general purposes and intent of this Title and any other ordinance of the City; and
> 4. in balancing the interest of the petitioner with the interest of the public, community interests will be better served by making the proposed change.
>
> Findings for either approval or denial are outlined in section H of this report.

G. Recommendation and Alternatives:

Staff recommends that the Planning Commission review the proposed Rezone and General Plan Amendment, discuss any public input received, and select from the options below.

Option 1 – Positive Recommendation

"I move that the Planning Commission recommend to the City Council approval of the proposed Rezone and General Plan Amendment for Wildflower as described in Section C of this report and as depicted in the attached exhibits, with the findings and conditions below."

Findings:

Tippe Morlan, AICP, Senior Planner
tmorlan@saratogaspringscity.com
1307 North Commerce Drive, Suite 200 • Saratoga Springs, Utah 84045
801-766-9793 x116 • 801-766-9794 fax

1. The request is for a rezone and general plan amendment. If the proposed General Plan Amendment is approved, the proposed zoning will be consistent with the Land Use Map of the General Plan.

2. The proposed change will not decrease nor otherwise adversely affect the health, safety, convenience, morals, or general welfare of the public because it more clearly designates the commercial areas within the Wildflower development prior to development of these neighborhoods.

3. The proposed change will more fully carry out the general purposes and intent of this Title and any other ordinance of the City so long as appropriate conditions are in place to ensure access, infrastructure, layout and appearance, traffic mitigation, trail connectivity, and other code compliance. These items will be reviewed further with each individual village plan, subdivision, and site plan application for compliance with the Land Development Code.

4. In balancing the interest of the petitioner with the interest of the public, community interests will be better served by making the proposed change because this will preserve future commercial areas within the City which will be a benefit to the community at buildout.

Conditions:

1. Any conditions as articulated by the Planning Commission or City Council: _____
_____

Alternative Motions:

Option 2 – Negative Recommendation

"I move that the Planning Commission forward a recommendation to the City Council for denial of the proposed General Plan Amendment and Rezone for Wildflower based on the Findings below:"

1. The amendment is not consistent with the General Plan, as articulated by the City Council: _____, and/or,
2. The amendment is not consistent with Section [19.XX] of the Code, as articulated by the City Council: _____, and/or
3. The amendment does not comply with the Second MDA, as articulated by the City Council: _____.
4. Any other findings as articulated by the City Council: _____

Option 3 - Continuance

"I move to **continue** the item to another meeting, with direction to the applicant and Staff on information and/or changes needed to render a decision as to whether the application meets the requirements of City ordinances, as follows:

1. _____
2. _____
3. _____

H. Exhibits:

A. Approved Community Plan – Land Use and Commercial Standards
B. Approved MDA Amendment

Tippe Morlan, AICP, Senior Planner
tmorlan@saratogaspringscity.com
1307 North Commerce Drive, Suite 200 • Saratoga Springs, Utah 84045
801-766-9793 x116 • 801-766-9794 fax

02 Land Use Map Exhibit

LEGEND			
Type*	Description	Approx. Acres	Allocated Residential ERUs
1	Single Family (5,000+ SF)	372	1,160
2	Single Family (<5,000 SF)	100	693
3	Single Family (<5,000 SF), 3-Story	19	137
4	Townhomes / Apartments / Condos	125	1,248
5	Commercial / Business Park	158	--
	Mountain View Corridor (MVC)	141	--
	Open Space (OS)	287*	--
	Total	1,202	3,238

NOTES: Commercial / Business Park ERUs are omitted and will be calculated and approved per City requirement with determination of building use. All areas shown are approximate, areas to be determined at final design.

Refer to residential standards on page 5-11 and commercial standards on page 5-19.

* See Community *Open Space Exhibit* on page 4-04 for open space details.

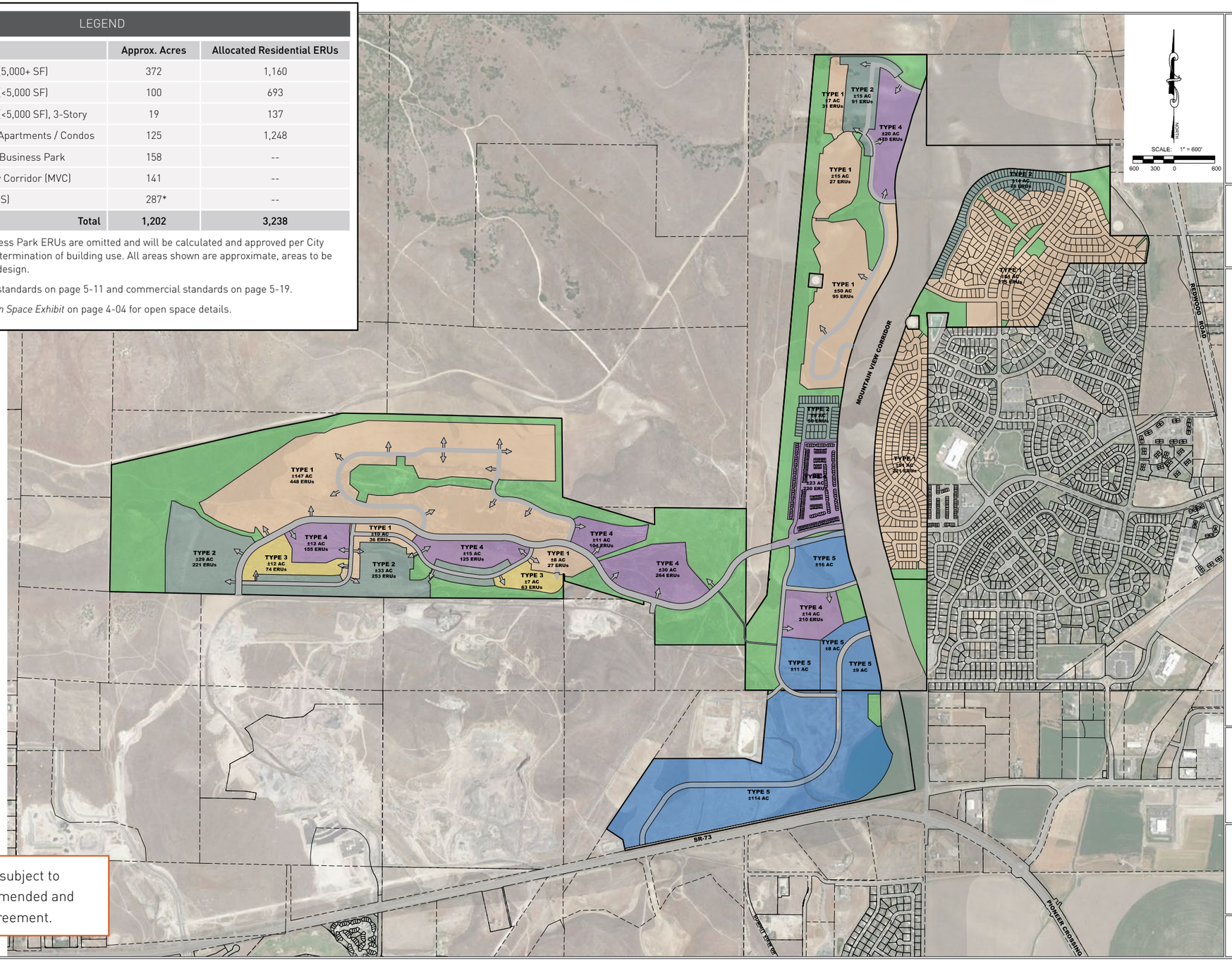

Note: This map is only conceptual, subject to exceptions and modifications in the Amended and Restated Master Development Agreement.

Commercial Standards

Type 5 — Community Commercial / Business Park

The purpose of the Community Commercial / Business Park type is to allow for medium-sized permitted commercial developments near residential neighborhoods, with establishments that will serve the nearby community. Development under these regulations should provide for Neighborhood Commercial (NC), Community Commercial (CC), Regional Commercial (RC), Business Park (BP), and Office Warehouse (OW), subject to location restrictions as determined during Village Plan review. Improvements such as trails, seating, and lighting that would help create gathering spaces and promote pedestrian activity are expected. Setbacks and configurations will be in line with City code.

Permitted Uses

Permitted uses within Type 5 areas will follow as per the table provided in ***Saratoga City Municipal code, section 19.04.11***. The labels show correlating uses as a guideline.

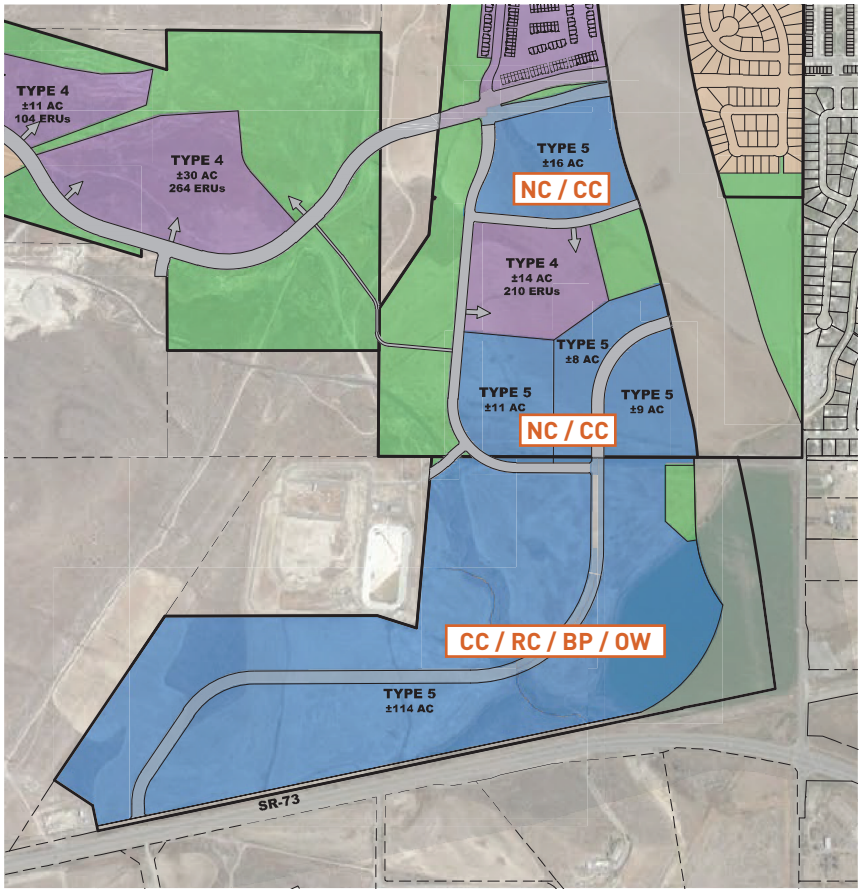

Exhibit B: Approved MDA Amendment

ORDINANCE NO. 19-40 (12-17-19)

AN ORDINANCE OF THE CITY OF SARATOGA SPRINGS, UTAH, APPROVING A MASTER DEVELOPMENT AGREEMENT AMENDMENT FOR THE WILDFLOWER DEVELOPMENT

WHEREAS, the City approved the Wildflower community plan ("CP") with a master development agreement ("MDA") in 2015, and an amended CP in 2016, which vested the Developer with 1,468 residential units; and

WHEREAS, the City approved an MDA for the Springs in 2015 following annexation of 479 acres into the City, which vested the Developer with 1,770 residential units; and

WHEREAS, DAI Utah has applied for an amendment to the Wildflower Community Plan and to the corresponding Master Development Agreement pursuant to Chapter 19.26 of the Land Development Code ("Application"); and

WHEREAS, the application combines both the Wildflower and the Springs communities maintaining the existing allocated 3,238 Equivalent Residential Units (ERUs) on the 1,201.71 acre site; and

WHEREAS, the application proposes to amend and restate the entire CP and MDA with amendments to increase the intensity of homes in the Springs, establish development standards for the development of the property, and establish updated open space regulations; and

WHEREAS, pursuant to its legislative authority under Utah Code Annotated § 10-9a-101, et seq., the City Council, in exercising its legislative discretion, has determined that approving the application furthers the health, safety, prosperity, security, and general welfare of the residents and taxpayers of the City.

NOW THEREFORE, the City Council of the City of Saratoga Springs, Utah hereby ordains as follows:

SECTION I – ENACTMENT

The Wildflower Community Plan amendment and the Amended and Restated Master Development Agreement, attached hereto as Exhibit A and incorporated herein by this reference, are hereby approved and enacted, subject to the City Council's adopted findings and conditions of approval.

SECTION II – AMENDMENT OF CONFLICTING ORDINANCES

If any ordinances, resolutions, policies, or zoning maps of the City of Saratoga Springs heretofore adopted are inconsistent herewith they are hereby amended to comply with the provisions hereof. If they cannot be amended to comply with the provisions hereof, they are hereby repealed.

SECTION III – EFFECTIVE DATE

This ordinance shall take effect upon its passage by a majority vote of the Saratoga Springs City Council and following notice and publication as required by the Utah Code.

SECTION IV – SEVERABILITY

If any section, subsection, sentence, clause, phrase, or portion of this ordinance is, for any reason, held invalid or unconstitutional by any court of competent jurisdiction, such provision shall be deemed a separate, distinct, and independent provision, and such holding shall not affect the validity of the remaining portions of this ordinance.

SECTION V – PUBLIC NOTICE

The Saratoga Springs Recorder is hereby ordered, in accordance with the requirements of Utah Code § 10-3-710—711, to do as follows:

a. deposit a copy of this ordinance in the office of the City Recorder; and
b. publish notice as follows:
   i. publish a short summary of this ordinance for at least one publication in a newspaper of general circulation in the City; or
   ii. post a complete copy of this ordinance in 3 public places within the City.

ADOPTED AND PASSED by the City Council of the City of Saratoga Springs, Utah, this 17th day of December, 2019.

Signed: _____
Jim Miller, Mayor

Attest: _____
Cindy LoPiccolo, City Recorder

	VOTE
Shellie Baertsch	aye
Michael McOmber	aye
Ryan Poduska	aye
Chris Porter	aye
Stephen Willden	aye

EXHIBIT A

Wildflower Amended and Restated Master Development Agreement

WHEN RECORDED, RETURN TO:

_____
_____

AMENDED AND RESTATED
MASTER DEVELOPMENT AGREEMENT
FOR THE
WILDFLOWER MASTER PLANNED COMMUNITY

[_____], 2019

TABLE OF CONTENTS

1. **Incorporation of Recitals and Exhibits/ Definitions**. 6
2. **Development of the Project**. 11
   2.1 **Exclusive Agreement/Novation and superceding of the Original Development Agreement.** 11
   2.2 **Excluded Property.** 12
   2.3 **Compliance with this ARMDA**. 12
   2.4 **Accounting for Parcels Sold to Subdevelopers**. 12
   2.5 **Cemetery Property**.. 12
3. **Zoning and Vested Rights.** 12
   3.1 **Zoning**. 12
   3.2 **Vested Rights Granted by Approval of this ARMDA**. 13
   3.3 **Exceptions**. 13
4. **Term of Agreement**. 15
5. **Processing of Development Applications**. 16
   5.1 **Outsourcing of Processing of Development Applications**. 16
   5.2 **Acceptance of Certifications Required for Development Applications**. 16
   5.3 **Independent Technical Analyses for Development Applications**. 17
   5.4 **City Denial of a Development Application**. 17
   5.5 **Meet and Confer regarding Development Application Denials**. 18
   5.6 **The City's Denials of Development Applications Based on Denials from Non-City Agencies**. 18
   5.7 **Mediation of Development Application Denials**. 18
   5.8 **Arbitration of Development Application Objections**. 19
6. **Application Under the City's Future Laws**. 20
7. **Infrastructure**. 20
   7.1 **Construction by and Master Developer**. 20
   7.2 **Consistency with Master Utility Plan.** 20
   7.3 **Bonding**. 20
8. **Upsizing/Reimbursements to Master Developer**. 21
   8.1 **"Upsizing"**. 21
9. **Public Infrastructure Financing.** 21
10. **Impact Fees.** 21

11. **Site Preparation.** 21
11.1 **Certain Extraction, Processing and Uses Permitted.** 21
11.2 **Additional Requirements for Uses Off-Site.** 22
11.3 **Limitation of Material Extraction, Processing and Uses.** 22
11.4 **Limitation on Use of Certain Roads.** 22
11.5 **Requirement of Approval of a Development Application.** 23
12. **Rocky Mountain Power Corridor.** 23
13. **Provision of Municipal Services.** 23
14. **Default**. 23
14.1 **Notice**. 24
14.2 **Contents of the Notice of Default**. 24
14.3 **Meet and Confer, Mediation, Arbitration**. 24
14.4 **Remedies**. 24
14.5 **Public Meeting**. 25
14.6 **Emergency Defaults**. 25
14.7 **Extended Cure Period**. 25
14.8 **Default of Assignee**. 25
15. **Notices**. 26
15.1 **Effectiveness of Notice**. 26
16. **Headings**. 27
17. **No Third-Party Rights/No Joint Venture**. 27
18. **Assignability**. 27
18.1 **Related Entity**. 28
18.2 **Notice**. 28
18.3 **Time for Objection**. 28
18.4 **Partial Assignment**. 28
18.5 **Denial**. 28
18.6 **Assignees Bound by ARMDA**. 29
19. **Binding Effect**. 29
20. **No Waiver**. 29
21. **Severability**. 29
22. **Force Majeure**. 29
23. **Time is of the Essence**. T..... 30
24. **Appointment of Representatives**. 30

25. **Applicable Law**. 30
26. **Venue.** 30
27. **Entire Agreement**. 30
28. **Mutual Drafting**. 31
29. **Exclusion from Moratoria**. 31
30. **Estoppel Certificate.** 31
31. **Recordation and Running with the Land**. 31
32. **Authority**. 31

AMENDED AND RESTATED
MASTER DEVELOPMENT AGREEMENT
FOR THE
WILDFLOWER MASTER PLANNED COMMUNITY

THIS AMENDED AND RESTATED MASTER DEVELOPMENT AGREEMENT is made and entered as of the [____] day of [_____], 2019, by and between the CITY OF SARATOGA SPRINGS, WF II, LLC, a Utah limited liability company, Collins One, LLC, a Utah limited liability company, Sunrise 3, LLC, a Utah limited liability company, Tanuki, LLC, a Utah limited liability company, and Wildflower Developers, LLC, a Utah limited liability company.

RECITALS

A. The capitalized terms used in this ARMDA and in these Recitals are defined in Section 1.2, below.

B. Owners owns the Property which is located within the City.

C. Master Developer is under contract with Owners to develop the Project on the Property.

D. A portion of the Property, along with the Excluded Property, is currently the subject of the Original Development Agreement.

E. Another portion of the Property is currently the subject of the Springs ADA.

F. The Parties desire to enter into this ARMDA to novate, replace and supersede, where applicable, the Original Development Agreement and the Springs ADA in their entirety as they relate to the Property.

G. Contemporaneously with the approval of this ARMDA the City has zoned the Property with its "PC" Zone.

H. As a part of this AMRDA the City has approved the Community Plan.

I. The Parties intend that the Original Development Agreement shall remain in full force and effect as it relates to the Excluded Property.

J. Owners, Master Developer and the City desire that the Property be developed in a unified and consistent fashion pursuant to the Master Plan.

K. The Parties acknowledge that development of the Property pursuant to this ARMDA will result in significant planning and economic benefits to the City, and its residents by, among other things requiring orderly development of the Property as a master planned development and increasing property tax and other revenues to the community based on improvements to be constructed on the Property.

L. The Parties desire to enter into this ARMDA to specify the rights and responsibilities of Owners and Master Developer to develop the Property as expressed in this ARMDA and the rights and responsibilities of the City to allow and regulate such development pursuant to the requirements of this ARMDA.

M. The Parties understand and intend that this ARMDA is a "development agreement" within the meaning of the Act and entered into pursuant to the terms of the Act.

N. The City finds that this ARMDA and the Community Plan conforms with the intent of each potential the City's General Plan.

NOW, THEREFORE, in consideration of the mutual covenants contained herein, and other good and valuable consideration, the receipt and sufficiency of which is hereby acknowledged, the City and Master Developer hereby agree to the following:

TERMS

1. **Incorporation of Recitals and Exhibits/ Definitions**.

1.1 **Incorporation**. The foregoing Recitals and Exhibits "A" - "F" are hereby incorporated into this ARMDA.

1.2 **Definitions**. As used in this ARMDA, the words and phrases specified below shall have the following meanings:

1.2.1 **Act** means the City Land Use, Development, and Management Act, Utah Code Ann. §10-9a-101 (2019) et seq.

1.2.2 **Administrator** means the person designated by the City as the Administrator of this ARMDA.

1.2.3 **Applicant** means a person or entity submitting a Development Application.

1.2.4 **ARMDA** means this Amended and Restated Master Development Agreement.

1.2.5 **Buildout** means the completion of all of the development on the entire Project.

1.2.6 **Cemetery Property** means that property located at _____ _____.

1.2.7 **City** means the City of Saratoga Springs.

1.2.8 **City Consultants** means those outside consultants employed by the City in various specialized disciplines such as traffic, hydrology or drainage for reviewing certain aspects of the development of the Project.

1.2.9 **City's Future Laws** means the ordinances, policies, standards, and procedures which may be in effect as of a particular time in the future when a Development Application is submitted for a part of the Project and which may or may not be applicable to the Development Application depending upon the provisions of this ARMDA.

1.2.10 **City's Vested Laws** means the ordinances, policies, standards and procedures of the City in effect as of December 17, 2019 except as those may be modified in the Community Plan and in this ARMDA. Certain of those provisions of the City's Vested Laws that are modified by this ARMDA are listed in Exhibit "___" but the Parties acknowledge that there may be additional provisions in the ARMDA and the future Community Plans.

1.2.11 **Community Plan** means the plan for the development of the entire Project as shown on Exhibit "B".

1.2.12 **Council** means the elected City Council of the City.

1.2.13 **Default** means a material breach of this ARMDA as specified herein.

1.2.14 **Denied** means a formal denial issued by the final decision-making body of the City for a particular type of Development Application but does not include review comments or "redlines" by The City staff.

1.2.15 **Development** means the development of a portion of the Property pursuant to an approved Development Application.

1.2.16 **Development Application** means a complete application to the City for development of a portion of the Project including a Village Plan, Subdivision, Plan or any other permit, certificate or other authorization from the City required for development of the Project.

1.2.17 **Development Report** means a report containing the information specified in Section2.4 submitted to the City by Master Developer for a Development by Master Developer or for the sale by Owners of any Parcel to a Subdeveloper or the submittal of a Development Application by a Subdeveloper pursuant to an assignment from Owners and Master Developer.

1.2.18 **Equivalent Residential Dwelling Units** shall have the meaning specified in the City's Vested Laws.

1.2.19 **Exceptions to City's Vested Laws** means those provisions in the Community Plan that modify the City's Vested Laws for the Project.

1.2.20 **Excluded Property** means that property as described in Exhibit A-2 which has previously been developed pursuant to the Original Development Agreement.

1.2.21 **Intended Uses** means the development on the Project of the Maximum Equivalent Residential Uses and all of the commercial, retail, office and other uses specified in the Community Plan

1.2.22 **Master Developer** means Wildflower Developers, LLC, a Utah limited liability company, and its assignees or transferees as permitted by this ARMDA.

1.2.23 **Maximum Equivalent Residential Units** means the development on the Property of three thousand seven hundred twenty-nine (3,729) Equivalent Residential Dwelling Units.

1.2.24 **Master Utility Plan** means a plan for providing utilities to the Project as more fully specified in Exhibit "C" and lawful updates made pursuant to the Utah Impact Fees Act, Utah Code § 11-36a-101 et seq.

1.2.25 **Non-City Agency** means any regulatory body having any jurisdiction over the consideration of any Development Application other than the City.

1.2.26 **Notice** means any notice to or from any Party to this ARMDA that is either required or permitted to be given to another party.

1.2.27 **Original Development Agreement** means a Development Agreement dated February 24, 2015 which is recorded as Entry # _____ in the official records of the Utah County Recorder which applies to a portion of the Property.

1.2.28 **Outsourc[e][ing]** means the process of the City contracting with the City Consultants or paying overtime to the City employees to provide technical support in the review and approval of the various aspects of a Development Application as is more fully set out in this ARMDA.

1.2.29 **Owners** means WF II, LLC, a Utah limited liability company, Collins One, LLC, a Utah limited liability company, Sunrise 3, LLC, a Utah limited liability company, Tanuki, LLC, a Utah limited liability company, that own those portions of the Property as more fully specified in Exhibit "D".

1.2.30 **Parcel** means a portion of the Property that is created by the Owners and Master Developer to be sold to a Subdeveloper.

1.2.31 **Party/Parties** means, in the singular, either Master Developer, Owners or the City; in the plural each of Owners, Master Developer and the City.

1.2.32 **Plan** means plans approved by the City pursuant to a Development Application.

1.2.33 **Planning Commission** means the City's Planning Commission.

1.2.34 **Pod** means an area of the Project as generally illustrated on the Master Plan intended for a certain number of square feet of industrial or warehousing space.

1.2.35 **Powerline Corridor** means a powerline corridor owned by Rocky Mountain Power that is illustrated on the Community Plan.

1.2.36 **Project** means the total development to be constructed on the Property pursuant to this ARMDA with the associated public and private facilities, and all of the other aspects approved as part of this ARMDA.

1.2.37 **Property** means the real property to be developed into the Project as more fully described in Exhibit "A-1".

1.2.38 **Public Infrastructure** means those elements of infrastructure that are planned to be dedicated to the City as a condition of the approval of a Development Application.

1.2.39 **Springs ADA** an Annexation and Development Agreement dated April 21, 2015 which is recorded as Entry # _____ in the official records of the Utah County Recorder which applies to a portion of the Property.

1.2.40 **Subdeveloper** means a person or an entity not "related" (as defined by Section 165 of the Internal Revenue Code) to Owners or Master Developer which purchases a Parcel for development.

1.2.41 **Subdivision** means the division of any portion of the Project into developable area pursuant to State Law and/or the Zoning Ordinance.

1.2.42 **Subdivision Application** means the application to create a Subdivision.

1.2.43 **System Improvements** means those components of the City's infrastructure that are defined as such under the Utah Impact Fees Act.

1.2.44 **Village Plan** means plans for the development of portion of the Project required by Chapter 19.26 of the City's Vested Laws.

1.2.45 **Zoning** means the City's PC Zone as specified in the City's Vested Laws.

2. **Development of the Project**.

2.1 **Exclusive Agreement/Novation and superceding of the Original Development Agreement.** This ARMDA shall be the exclusive agreement between the Parties for development

of the Property. As it relates to the Property, the Original Development Agreement and the Springs DA are hereby acknowledged to be novated, superseded and of no effect.

2.2 **Excluded Property.** The Excluded Property shall remain subject to the Original Development Agreement.

2.3 **Compliance with this ARMDA**. Development of the Project shall be in accordance with the City's Vested Laws (as modified by the Exceptions to City's Vested Laws), the City's Future Laws (to the extent that these are applicable as otherwise specified in this ARMDA), the Zoning Map and this ARMDA.

2.4 **Accounting for Parcels Sold to Subdevelopers**. Any Parcel sold by Owners to a Subdeveloper shall include the transfer of the right and obligation to develop such Parcel in accordance with this Agreement. At the recordation of a Final Plat or other document of conveyance for any Parcel sold to a Subdeveloper, Master Developer shall provide the City a Sub-Development Report showing the new ownership of the Parcel(s) sold and the projected or potential uses.

2.5 **Cemetery Property**. Master Developer shall postpone development of the Cemetery Property until December 31, 2024 If, prior to the end of that postponement, Camp Williams completes purchase of some or all of the Cemetery Property, Master Developer may transfer 77 units, consisting of 63 vested units and 14 additional units (to compensate Master Developer for the delay), prorated in accordance to the amount of Cemetery Property sold, to any other area of the Development. Developer may use these units to increase the total number of units in the receiving area notwithstanding the number of units specified in the community plan.

3. **Zoning and Vested Rights.**

3.1 **Zoning**. The Property is zoned as shown on the Zoning Map and that zoning accommodates and allows all development contemplated by Owners and Master Developer,

including the development rights and uses described herein and depicted in the Master Plan, as more particularly set forth below.

3.2 **Vested Rights Granted by Approval of this ARMDA**. To the maximum extent permissible under the laws of Utah and the United States and at equity, the Parties intend that this ARMDA grants Owners and Master Developer all rights to develop the Project in fulfillment of this ARMDA, the City's Vested Laws, and the Zoning Map except as specifically provided herein and in the Community Plan. The Parties specifically intend that this ARMDA grants to Owners and Master Developer "vested rights" as that term is construed in Utah's common law and pursuant to Utah Code Ann. § 10-9a-508. As of the date of this ARMDA, the City confirms that the uses, configurations, densities, and other development standards reflected in the Master Plan are approved under, and generally consistent with the City's existing laws, Zoning Map, and General Plan. However, the Parties acknowledge that the Master Plan is conceptual in nature and additional details may need to be provided by Developer to determine full compliance with the Vested Laws, Future Laws, Zoning Map, General Plan, and this ARMDA. If there is a conflict between any provision of Chapter 19 of the City Code and any portion of this ARMDA, even if not listed in Exhibit A, then the provisions of this ARMDA shall control.

3.3 **Exceptions**. The restrictions on the applicability of the City's Future Laws to the Project as specified in Section 3.2 are subject to only the following exceptions:

3.3.1 Owners and Master Developer Agreement. The City's Future Laws that Owners and Master Developer agree in writing to the application thereof to the Project, except for the remaining exceptions in 3.3.2 to 3.3.9;

3.3.2 State and Federal Compliance. The City's Future Laws which are generally applicable to all properties in the City's jurisdiction and which are required to comply with State and Federal laws and regulations affecting the Project;

3.3.3 Codes. The City's development standards, engineering requirements and supplemental specifications for public works, and any of the City's Future Laws that are updates or amendments to existing building, plumbing, mechanical, electrical, dangerous buildings, drainage, or similar construction or safety related codes, such as the International Building Code, the APWA Specifications, AAHSTO Standards, the Manual of Uniform Traffic Control Devices or similar standards that are generated by a nationally or statewide recognized construction/safety organization, or by the State or Federal governments and are required to meet legitimate concerns related to public health, safety or welfare;

3.3.4 Taxes. Taxes, or modifications thereto, so long as such taxes are lawfully imposed and charged uniformly by the City to all properties, applications, persons and entities similarly situated; or,

3.3.5 Fees. Changes to the amounts of fees for the processing of Development Applications that are generally applicable to all development within the City and which are adopted pursuant to State law.

3.3.6 Impact Fees. Future Impact Fees or modifications thereto which are lawfully adopted and imposed by the City.

3.3.7 Planning and Zoning Modification. Changes by the City to its planning principles and design standards such as architectural or design requirements, setbacks or similar items so long as such changes do not work to reduce the Maximum Residential Units, are generally

applicable across the entire City and do not materially and unreasonably increase the demonstrable costs or diminish the demonstrable profits of any Development.

3.3.8 Processing of Development Applications. Changes in the City's Future Laws that relate to the processing of Development Applications which are generally applicable across the entire City and do not materially and unreasonably increase the demonstrable costs, or diminish the demonstrable profits.

3.3.9 Compelling, Countervailing Interest. Laws, rules or regulations that the City's land use authority finds, on the record, are necessary to prevent a physical harm to third parties, which harm did not exist at the time of the execution of this Agreement, and which harm, if not addressed, would jeopardize a compelling, countervailing public interest pursuant to Utah Code Ann. § 10-9a-509(1)(a)(ii) (2019), as proven by the City by clear and convincing evidence.

4. **Term of Agreement**. The term of this ARMDA shall be until December 31, 2029. If as of that date Master Developer has not been declared to be in default as provided in Section 14, and if any such declared default is not being cured as provided therein, then this MDA shall be automatically extended until December 31, 2034, and, thereafter, for up to one (1) additional period of five (5) years. This ARMDA shall continue beyond its term as to any rights or obligations for subdivisions or site plans that have been given final approval and have been recorded prior to the end of the term of this ARMDA. However, this ARMDA shall terminate as to any subdivisions or site plans that have not been given final approval and have not been recorded prior to the end of the term of this ARMDA. When public improvements required by this ARMDA and the adopted community and village plans have been constructed and accepted by City (after the expiration of applicable warranty periods), Developer shall be released from and have no continuing obligations with respect to such improvements.

5. **Processing of Development Applications.**

5.1 **Outsourcing of Processing of Development Applications**. Within fifteen (15) business days after receipt of a Development Application and upon the request of Master Developer the City and Master Developer will confer to determine whether the City desires to Outsource the review of any aspect of the Development Application to ensure that it is processed on a timely basis. If the City determines in its sole discretion that Outsourcing is appropriate then the City shall promptly estimate the reasonably anticipated differential cost of Outsourcing in the manner selected by the Master Developer or Subdeveloper in good faith consultation with the Master Developer or Subdeveloper (either overtime to The City employees or the hiring of a City Consultant). If the Master Developer or a Subdeveloper notifies the City that it desires to proceed with the Outsourcing based on the City's estimate of costs then the Master Developer or Subdeveloper shall deposit in advance with the City the estimated differential cost and the City shall then promptly proceed with having the work Outsourced. Upon completion of the Outsourcing services and the provision by the City of an invoice (with such reasonable supporting documentation as may be requested by Master Developer or Subdeveloper) for the actual differential cost (whether by way of paying a City Consultant or paying overtime to The City employees) of Outsourcing, Master Developer or the Subdeveloper shall, within ten (10) business days pay or receive credit (as the case may be) for any difference between the estimated differential cost deposited for the Outsourcing and the actual cost differential.

5.2 **Acceptance of Certifications Required for Development Applications**. Any Development Application requiring the signature, endorsement, or certification and/or stamping by a person holding a license or professional certification required by the State of Utah in a particular discipline shall be so signed, endorsed, certified or stamped signifying that the contents

of the Development Application comply with the applicable regulatory standards of the City. The City should endeavor to make all of its redlines, comments or suggestions at the time of the first review of the Development Application unless any changes to the Development Application raise new issues that need to be addressed.

5.3 **Independent Technical Analyses for Development Applications**. If the City needs technical expertise beyond the City's internal resources to determine impacts of a Development Application such as for structures, bridges, water tanks, and other similar matters which are or are not required by the City's Vested Laws to be certified by such experts as part of a Development Application, the City may engage such experts as The City Consultants with the actual and reasonable costs being the responsibility of Applicant. The City Consultant undertaking any review by the City required or permitted by this ARMDA shall be selected pursuant to The City ordinances or regulations and Utah State law, in particular Utah Code § 11-39-101 et seq., as amended. Except where doing so would violate state law or the City's contracting or purchasing policy, applicant may, in its sole discretion, strike from the list of qualified proposers any of such proposed consultants so long as at least three (3) qualified proposers remain for selection. The anticipated cost and timeliness of such review may be a factor in choosing the expert. The actual and reasonable costs are the responsibility of Applicant.

5.4 **City Denial of a Development Application**. If the City denies a Development Application the City shall provide a written determination advising the Applicant and Master Developer of the reasons for denial including specifying the reasons the City believes that the Development Application is not consistent with this ARMDA, and/or the City's Vested Laws (or, if applicable, the City's Future Laws).

5.5 **Meet and Confer regarding Development Application Denials**. Upon a written request from an Applicant, the City and Applicant shall meet within fifteen (15) business days of any Denial to resolve the issues specified in the Denial of a Development Application. Master Developer may, at its option, participate in this Meet and Confer process.

5.6 **The City's Denials of Development Applications Based on Denials from Non-City Agencies**. If the City's denial of a Development Application is based on the denial of the Development Application by a Non-City Agency, Applicant shall appeal any such denial through the appropriate procedures for such a decision and not through the processes specified below.

5.7 **Mediation of Development Application Denials**.

5.7.1 Issues Subject to Mediation. Issues resulting from the City's Denial of a Development Application that the Applicant and the City are not able to resolve by "Meet and Confer" shall be mediated and include the following:

(i) the location of on-site infrastructure, including utility lines and stub outs to adjacent developments,

(ii) right-of-way modifications that do not involve the altering or vacating of a previously dedicated public right-of-way,

(iii) interpretations, minor technical edits or inconsistencies necessary to clarify or modify documents consistent with their intended purpose of the Development Standards, and

(iv) the issuance of building permits.

5.7.2 Mediation Process. If the City and Applicant are unable to resolve a disagreement subject to mediation, the City and Applicant shall attempt within ten (10) business days to appoint a mutually acceptable mediator with knowledge of the legal issue in dispute. If

the City and Applicant are unable to agree on a single acceptable mediator they shall each, within ten (10) business days, appoint their own representative. These two representatives shall, between them, choose the single mediator. Applicant shall pay the fees of the chosen mediator. The chosen mediator shall within fifteen (15) business days, review the positions of the City and Applicant regarding the mediation issue and promptly attempt to mediate the issue between the City and Applicant. Master Developer may, at its option, participate in the mediation. If the City and Applicant are unable to reach agreement, the mediator shall notify the City, Applicant, Master Developer and Owners in writing of the resolution that the mediator deems appropriate. The mediator's opinion shall not be binding on the City and Applicant.

5.8 **Arbitration of Development Application Objections**.

5.8.1 Issues Subject to Arbitration. Issues regarding the City's Denial of a Development Application that are subject to resolution by scientific or technical experts such as traffic impacts, water quality impacts, pollution impacts, etc. are subject to arbitration.

5.8.2 Mediation Required Before Arbitration. Prior to any arbitration the City and Applicant shall first attempt mediation as specified in Section 5.7.

5.8.3 Arbitration Process. If the City and Applicant are unable to resolve an issue through mediation, the City and Applicant shall attempt within ten (10) business days to appoint a mutually acceptable expert in the professional discipline(s) of the issue in question. If the City and Applicant are unable to agree on a single acceptable arbitrator they shall each, within ten (10) business days, appoint their own individual appropriate expert. These two experts shall, between them, choose the single arbitrator. Applicant shall pay the fees of the chosen arbitrator. The chosen arbitrator shall within fifteen (15) business days, review the positions of the City and Applicant regarding the arbitration issue and render a decision. Master Developer may, at its

option, participate in the arbitration. The arbitrator shall ask the prevailing party to draft a proposed order for consideration and objection by the other side. Upon adoption by the arbitrator, and consideration of such objections, the arbitrator's decision shall be final and binding upon the City and Applicant. If the arbitrator determines as a part of the decision that the City's or Applicant's position was not only incorrect but was also maintained unreasonably and not in good faith then the arbitrator may order the City or Applicant to pay the arbitrator's fees.

5.8.4 Limitation on Damages. The arbitrator may not award monetary damages or attorney fees, and any award shall be limited to specific performance by the breaching party.

6. **Application Under the City's Future Laws.** Without waiving any rights granted by this ARMDA, Master Developer may at any time, choose to submit a Development Application for all of the Project under the City's Future Laws in effect at the time of the Development Application so long as Master Developer is not in current breach of this Agreement.

7. **Infrastructure.**

7.1 **Construction by and Master Developer**. Master Developer shall have the right and the obligation to construct or cause to be constructed and installed all Public Infrastructure reasonably and lawfully required as a condition of approval of the Development Application.

7.2 **Consistency with Master Utility Plan.** The Public Infrastructure shall be consistent with and fulfill the purposes of the Master Utility Plan.

7.3 **Bonding**. If and to the extent required by the City's Vested Laws, unless otherwise provided by Chapters 10-9a of the Utah Code as amended, security for any required improvements shall be provided in a form acceptable to the City as specified in the City's Vested Laws. Partial releases of any such required security shall be made as work progresses based on the City's Vested Laws.

8. **Upsizing/Reimbursements to Master Developer**.

8.1 **"Upsizing"**. The City shall not require Owners or Master Developer to "upsize" any future Public Infrastructure (i.e., to construct the infrastructure to a size larger than required to service the Project) unless financial arrangements reasonably acceptable to Owners and Master Developer are made to compensate Master Developer for the incremental or additive costs of such upsizing. For example, if an upsizing to a water pipe size increases costs by 10% but adds 50% more capacity, the City shall only be responsible to compensate Master Developer for the 10% cost increase. An acceptable financial arrangement for upsizing of improvements means reimbursement agreements, payback agreements, and impact fee credits and reimbursements.

9. **Public Infrastructure Financing.** The City will use its best efforts at the request of Master Developer, within the scope of the City's legislative discretion, to create an "assessment area", "local district" or other similar financial vehicle to pay for portions of the Public Infrastructure.

10. **Impact Fees.** The City acknowledges that the Master Developer or Subdeveloper shall be entitled to impact fee waivers, credits, and/or reimbursements as provided by Utah Code § 11-36a-402(2), as amended, which as of the date of this ARMDA allows a developer to receive waivers, credits, and/or reimbursements if such developer: (a) dedicates land for a system improvement; (b) builds and dedicates some or all of a system improvement; or (c) dedicates a public facility that City and the developer agree will reduce the need for a system improvement.

11. **Site Preparation.**

11.1 **Certain Extraction, Processing and Uses Permitted.** Master Developer, and/or its agents, successors, assigns, tenants, guests, and invitees shall be permitted to extract and process the natural materials located on the Property such as aggregate (rock, sand or gravel products, but excluding any other underground materials or other minerals which may be

discovered, if any) during the course of grading, excavation, and other ordinary and customary development processes for the Property, subject to the City's Future Laws including excavation, grading, and stormwater regulations and permitting requirements. Such natural materials shall only be used and processed on-site in the construction of infrastructure, homes, or other buildings or improvements located on the Property if such materials meet the City's Future Laws pertaining to the use for such purposes. The zoning for the Project shall not be construed to limit or restrict any such temporary development-related extraction, processing and hauling activities.

11.2 **Additional Requirements for Uses Off-Site.** Any excess materials not needed by the Project may also be sold and/or hauled off-site in locations outside the Project, provided that Master Developer: (1) obtains from the City permits for such operation, including but not limited to, a traffic plan, storm water pollution prevention plan, and a grading plan and permit (meeting the requirements of City Future Laws); and (2) complies with such approved permits in its extraction, processing and hauling activities.

11.3 **Limitation of Material Extraction, Processing and Uses.** The provisions of Sections 11.2 and 11.3 shall only allow the excavation and processing of materials pursuant to an active permit required by City Future Laws. The excavation and processing shall not extend beyond the boundaries of the approved grading plan. The Parties acknowledge that the provisions of Sections 11.1 and 11.2 are not intended to allow the Property to be used as a general gravel mining operation.

11.4 **Limitation on Use of Certain Roads.** Without limiting the generality of the foregoing, (a) any trucks hauling materials away from the Project shall not utilize any of the Harvest Hills Subdivision roads or other local roads, but rather, Master Developer shall construct

a temporary road connecting portions of the Property upon which such extraction and processing will occur to Redwood Road or other State Highway, for such hauling activities, (b) Master Developer shall use reasonable efforts to screen such excavation and processing activities from neighboring properties, and (c) Master Developer's extraction activities shall not include mining materials which are deeper under the ground than the grading plan included within the Community Plan and which are materials or minerals other than rock, sand, or gravel products. Further, Master Developer must obtain all applicable excavation, grading, and storm water permits and comply with all other applicable provisions of the City's Future Laws.

11.5 **Requirement of Approval of a Development Application.** Master Developer shall not commence any use permitted under this Section 11 until such time as a Development Application has been approved by City in accordance with the terms and conditions of this ARMDA and the City's Vested Laws.

12. **Rocky Mountain Power Corridor.** The Parties acknowledge that if Master Developer obtains the rights to use the Powerline Corridor for a park or trails for the Project then the area so used shall count as a partial credit against any open space requirements for the Project as specified in the City's Vested Laws including the requirement to provide amenities.

13. **Provision of Municipal Services.** The City shall provide all City services to the Project that it provides from time-to-time to similarly situated residents and properties within the City including, but not limited to, police, fire and other emergency services. Such services shall be provided to the Project at the same levels of services, on the same terms and at the same rates as provided to similarly situated residents and properties in the City.

14. **Default**.

14.1 **Notice**. If Owners, Master Developer or a Subdeveloper or the City fails to perform their respective obligations hereunder or to comply with the terms hereof, the Party believing that a Default has occurred shall provide Notice to all other Parties. If the City believes that the Default has been committed by a Subdeveloper then the City shall also provide a courtesy copy of the Notice to Owners and Master Developer.

14.2 **Contents of the Notice of Default**. The Notice of Default shall:

14.2.1 Specific Claim. Specify the claimed event of Default;

14.2.2 Applicable Provisions. Identify with particularity the provisions of any applicable law, rule, regulation or provision of this ARMDA that is claimed to be in Default;

14.2.3 Materiality. Identify why the Default is claimed to be material; and

14.2.4 Optional Cure. If the City chooses, in its discretion, it may propose a method and time for curing the Default which shall be of no less than thirty (30) days duration.

14.3 **Meet and Confer, Mediation, Arbitration**. Upon the issuance of a Notice of Default the Parties shall engage in the "Meet and Confer" and "Mediation" processes specified in Sections 5.5 and 5.7. If the claimed Default is subject to arbitration as provided in Section 5.8 then the Parties shall follow such processes.

14.4 **Remedies**. If the Parties are not able to resolve the Default by "Meet and Confer" or by mediation, and if the Default is not subject to arbitration then the Parties may have the following remedies, except as specifically limited in 15.9:

14.4.1 No Monetary Damages. Except for other remedies specified in this Section 14.4, any breach of this Agreement by either party shall not result in monetary damages but shall be limited to specific performance only.

14.4.2 Security. The right to draw on any security posted or provided in connection with the Project and relating to remedying of the particular Default.

14.4.3 Future Approvals. The right to withhold all further reviews, approvals, licenses, building permits and/or other permits for development of the Project in the case of a default by Master Developer, or in the case of a default by a Subdeveloper, development of those Parcels owned by the Subdeveloper until the Default has been cured.

14.5 **Public Meeting**. Before any remedy in Section 14.4 may be imposed by the City the party allegedly in Default shall be afforded the right to attend a public meeting before the City Manager and address the City Manager regarding the claimed Default.

14.6 **Emergency Defaults**. Anything in this ARMDA notwithstanding, if the City's Council finds on the record that a default materially impairs a compelling, countervailing interest of the City and that any delays in imposing such a default would also impair a compelling, countervailing interest of the City then the City may impose the remedies of Section 14.4 without the requirements of Sections 14.5. The City shall give Notice to Owners and Master Developer and/or any applicable Subdeveloper of any public meeting at which an emergency default is to be considered. Owners and Master Developer and/or any applicable Subdeveloper shall be allowed to address the City Council at that meeting regarding the claimed emergency Default.

14.7 **Extended Cure Period**. If any Default cannot be reasonably cured within thirty (30) days then such cure period shall be extended so long as the defaulting party is pursuing a cure with reasonable diligence.

14.8 **Default of Assignee**. A default of any obligations assumed by an assignee shall not be deemed a default of Owners or Master Developer.

15. **Notices**. All notices required or permitted under this ARMDA shall, in addition to any other means of transmission, be given in writing by certified mail and regular mail to the following address:

To the Master Developer:

Nate Shipp
Wildflower Developers, LLC
Exchange Place, Building B
14034 South 145 East, Suite 204
Draper, Utah 84020

With a Copy to:

Bruce R. Baird
Bruce R. Baird, PLLC
2150 South 1300 East, Suite 500
Salt Lake City, UT 84106

To the Owners and with Copies to as Shown on Exhibit "D":

To the City:

[_____]
[_____]
[_____]

With a Copy to:

[_____]
[_____]
[_____]

15.1 **Effectiveness of Notice**. Except as otherwise provided in this ARMDA, each Notice shall be effective and shall be deemed delivered on the earlier of:

15.1.1 Hand Delivery. Its actual receipt, if delivered personally or by courier service

15.1.2 Electronic Delivery. Its actual receipt if delivered electronically by email provided that a copy of the email is printed out in physical form and mailed or personally delivered as set forth herein on the same day and the sending party has an electronic receipt of the delivery of the Notice. If the copy is not sent on the same day, then notice shall be deemed effective the date that the mailing or personal delivery occurs.

15.1.3 Mailing. On the day the Notice is postmarked for mailing, postage prepaid, by First Class or Certified United States Mail and actually deposited in or delivered to the United States Mail. Any party may change its address for Notice under this ARMDA by giving written Notice to the other party in accordance with the provisions of this Section.

16. **Headings.** The captions used in this ARMDA are for convenience only and a not intended to be substantive provisions or evidences of intent.

17. **No Third-Party Rights/No Joint Venture.** This ARMDA does not create a joint venture relationship, partnership or agency relationship between the City, Owners and Master Developer. Further, the Parties do not intend this ARMDA to create any third-party beneficiary rights. The Parties acknowledge that this ARMDA refers to a private development and that the City has no interest in, responsibility for or duty to any third Parties concerning any improvements to the Property or the Project unless the City has accepted the dedication of such improvements at which time all rights and responsibilities—except for warranty bond requirements under the City's Vested Laws and as allowed by state law—for the dedicated public improvement shall be the City's.

18. **Assignability.** The rights and responsibilities of Owners and Master Developer under this ARMDA may be assigned in whole or in part, respectively, by Owners and Master Developer with the consent of the City as provided herein.

18.1 **Related Entity**. Owners' or Master Developer's transfer of all or any part of the Property to any entity "related" to Owners or Master Developer (as defined by regulations of the Internal Revenue Service in Section 165), Owners' or Master Developer's entry into a joint venture for the development of the Project or Owners' or Master Developer's pledging of part or all of the Project as security for financing shall also not be deemed to be an "assignment" subject to the above-referenced approval by the City unless specifically designated as such an assignment by the Owners or Master Developer. Owners or Master Developer shall give the City Notice of any event specified in this sub-section within ten (10) days after the event has occurred. Such Notice shall include providing the City with all necessary contact information for the newly responsible party.

18.2 **Notice**. Owners and Master Developer shall give Notice to the City of any proposed assignment and provide such information regarding the proposed assignee that the City may reasonably request in making the evaluation permitted under this Section. Such Notice shall include providing the City with all necessary contact information for the proposed assignee.

18.3 **Time for Objection**. Unless the City objects in writing within twenty (20) business days of notice, the City shall be deemed to have approved of and consented to the assignment.

18.4 **Partial Assignment**. If any proposed assignment is for less than all of Owners' or Master Developer's rights and responsibilities then the assignee shall be responsible for the performance of each of the obligations contained in this ARMDA to which the assignee succeeds. Upon any such approved partial assignment Owners and Master Developer shall not be released from any future obligations as to those obligations which are assigned but shall remain responsible for the performance of any obligations herein.

18.5 **Denial**. The City may only withhold its consent if the City is not reasonably satisfied of the assignee's financial ability to perform the obligations of Owners or Master

Developer proposed to be assigned or there is an existing breach of a development obligation owed to the City by the assignee or related entity that has not either been cured or in the process of being cured in a manner acceptable to the City. Any refusal of the City to accept an assignment shall be subject to the "Meet and Confer" and "Mediation" processes specified in Sections 5.5 and 5.7. If the refusal is subject to Arbitration as provided in Section 5.8 then the Parties shall follow such processes.

18.6 **Assignees Bound by ARMDA**. Any assignee shall consent in writing to be bound by the assigned terms and conditions of this ARMDA as a condition precedent to the effectiveness of the assignment.

19. **Binding Effect**. If Owner(s) sell(s) or conveys Parcels of lands to Subdevelopers or related Parties, the lands so sold and conveyed shall bear the same rights, privileges, and configurations as applicable to such Parcel and be subject to the same limitations and rights of the City when owned by Owners and as set forth in this ARMDA without any required approval, review, or consent by the City except as otherwise provided herein.

20. **No Waiver**. Failure of any Party hereto to exercise any right hereunder shall not be deemed a waiver of any such right and shall not affect the right of such party to exercise at some future date any such right or any other right it may have.

21. **Severability**. If any provision of this ARMDA is held by a court of competent jurisdiction to be invalid for any reason, the Parties consider and intend that this ARMDA shall be deemed amended to the extent necessary to make it consistent with such decision and the balance of this ARMDA shall remain in full force and affect.

22. **Force Majeure**. Any prevention, delay or stoppage of the performance of any obligation under this Agreement which is due to strikes, labor disputes, inability to obtain labor, materials,

equipment or reasonable substitutes therefor; acts of nature, governmental restrictions, regulations or controls, judicial orders, enemy or hostile government actions, wars, civil commotions, fires or other casualties or other causes beyond the reasonable control of the Party obligated to perform hereunder shall excuse performance of the obligation by that Party for a period equal to the duration of that prevention, delay or stoppage.

23. **Time is of the Essence**. Time is of the essence to this ARMDA and every right or responsibility shall be performed within the times specified.

24. **Appointment of Representatives**. To further the commitment of the Parties to cooperate in the implementation of this ARMDA, the City, Owners and Master Developer each shall designate and appoint a representative to act as a liaison between the City and its various departments and the Master Developer. The initial representative for the City shall be the City Administrator. The initial representative for Master Developer shall be Nate Shipp. The initial representative(s) for Owners shall be Nate Shipp. The Parties may change their designated representatives by Notice. The representatives shall be available at all reasonable times to discuss and review the performance of the Parties to this ARMDA and the development of the Project.

25. **Applicable Law**. This ARMDA is entered into in the City in the State of Utah and shall be construed in accordance with the laws of the State of Utah irrespective of Utah's choice of law rules.

26. **Venue.** Any action to enforce this ARMDA shall be brought only in the Fourth District Court for the State of Utah.

27. **Entire Agreement**. This ARMDA, and all Exhibits thereto, is the entire agreement between the Parties and may not be amended or modified except either as provided herein or by a subsequent written amendment signed by all Parties.

28. **Mutual Drafting**. Each Party has participated in negotiating and drafting this ARMDA and therefore no provision of this ARMDA shall be construed for or against any Party based on which Party drafted any particular portion of this ARMDA.

29. **Exclusion from Moratoria**. The Property shall be excluded from any moratorium adopted pursuant to Utah Code § 10-9a-504 unless such a moratorium is found on the record by the City Council to be necessary to avoid a physical harm to third parties and the harm, if allowed, would jeopardize a compelling, countervailing public interest as proven by the City with clear and convincing evidence.

30. **Estoppel Certificate.** Upon twenty (20) days prior written request by Owners, Master Developer or a Subdeveloper, the City will execute an estoppel certificate to any third party certifying that Owners, Master Developer or a Subdeveloper, as the case may be, at that time is not in default of the terms of this Agreement.

31. **Recordation and Running with the Land**. This ARMDA shall be recorded in the chain of title for the Property. This ARMDA shall amend, restate and replace the Original Development Agreement, and shall be deemed to run with the land. The data disks of the City's Vested Laws and the Master Utility Plan shall not be recorded in the chain of title. A secure copy of such data disks shall be filed with the applicable the City Recorder and each party shall also have an identical copy.

32. **Authority**. The Parties to this ARMDA each warrant that they have all of the necessary authority to execute this ARMDA. Specifically, on behalf of the City, the signature of the City Manager of the City is affixed to this ARMDA lawfully binding the City pursuant to Ordinance No. _____ adopted by _____ on _____, 2018;

IN WITNESS WHEREOF, the Parties hereto have executed this Agreement by and through their respective, duly authorized representatives as of the day and year first herein above written.

MASTER DEVELOPER:

Wildflower Developers, LLC,
a Utah limited liability company

By: _____
Name: _____
Its: _____

MASTER DEVELOPER ACKNOWLEDGMENT

STATE OF UTAH)
:ss.
COUNTY OF SALT LAKE)

On the _____ day of _____, 2018, personally appeared before me _____, who being by me duly sworn, did say that he/she is the _____ of XXXX, LLC, a Utah limited liability company, and that the foregoing instrument was duly authorized by the company at a lawful meeting held by authority of its operating agreement and signed in behalf of said company.

_____
NOTARY PUBLIC

My Commission Expires: _____

Residing at: _____

_____, the holder of a mortgage on a portion of the Property, hereby consents to and agrees to be bound to, this ARMDA

[ ]:

_____
a _____

By: _____
Name: _____
Its: _____

MORTGAGE HOLDER ACKNOWLEDGMENT

STATE OF _____)
:ss.
COUNTY OF _____)

On the _____ day of _____, 2018, personally appeared before me _____, who being by me duly sworn, did say that he/she is the _____ of _____, a _____, and that the foregoing instrument was duly authorized by the company at a lawful meeting held by authority of its governing documents and signed in behalf of said company.

_____
NOTARY PUBLIC

My Commission Expires: _____

Residing at: _____

CITY

Saratoga Springs City,
a Utah political subdivision

By: _____
Name: _____
Its: _____

Approved as to form and legality:

_____
City Attorney

Attest:

_____
City Clerk

CITY ACKNOWLEDGMENT

STATE OF UTAH)
:ss.
COUNTY OF UTAH)

On the _____ day of _____, 2018 personally appeared before me _____who being by me duly sworn, did say that he/she is the _____ of Saratoga Springs City, a political subdivision of the State of Utah, and that said instrument was signed in behalf of the City by authority of its City Council and said _____ acknowledged to me that the City executed the same.

_____
NOTARY PUBLIC

My Commission Expires: _____

Residing at: _____

TABLE OF EXHIBITS

Exhibit "A-1"	Legal Description of Property
Exhibit "A-2"	Legal Description of Excluded Property
Exhibit "B"	Community Plan
Exhibit "C"	Master Utility Plan (on disk)
Exhibit "D"	List of Owners
Exhibit "E"	City's Vested Laws (on disk)
Exhibit "__"	Exceptions to City's Vested Laws

AFFP

47905-NOTICE

Affidavit of Publication

STATE OF UTAH } SS

COUNTY OF UTAH }

Jayne Dunn, being duly sworn, says:

That she is the Legals Billing Clerk of the Daily Herald, a newspaper of general circulation, printed and published in Provo, Utah County, Utah; that the publication, a copy of which is attached hereto, was published in the said newspaper on the following dates:

December 20, 2019

That said newspaper was regularly issued and circulated on those dates. Same was also published online at utahlegals.com, according to Section 45-1-101 – Utah Code Annotated, beginning on the first date of publication, for at least 30 days thereafter and a minimum of 30 days prior to the date of scheduled sale.

SIGNED:

Jayne Dunn

Subscribed to and sworn to me this 27th day of December 2019.

Willy Shaw

Willy Shaw, Notary Public, Utah County, Utah – My commission expires:
September 24, 2021

WILLY SHAW
NOTARY PUBLIC-STATE OF UTAH
COMMISSION# 687006
COMM. EXP. 09-24-2021

PUBLIC NOTICE

Notice is hereby given that the City Council of the City of Saratoga Springs, Utah, at their meeting of December 17th 2019, passed and adopted the following Ordinance:

1) Ordinance 19-40 (12-17-19) Approving a Master Development Agreement Amendment for Wildflower Development.

Copies of these Ordinances are on file in the office of the City of Saratoga Springs City Recorder and are available for review during City business hours. Legal Notice 47905 Published in The Daily Herald December 20, 2019.

CITY OF SARATOGA SPRINGS LEGAL
1307 N COMMERCE DR
SARATOGA SPRINGS UT 84045

Planning Commission Staff Report

Author: Gordon Miner, City Engineer
Subject: Revisions to the City's Std. Technical Specifications and Drawings
Date: May 14, 2020
Type of Item: Legislative Recommendation

A. Summary: The Engineering Department keeps a running list of minor and major changes that are needed to provide additional clarity and effectiveness, to remove inconsistencies, to reflect new "best practices" in Engineering, and to address changes in the community's needs, with the goal of adopting revisions every so often to keep the Standard Technical Specifications and Drawings current.

B. Funding Source: Not applicable.

C. Review: The proposed revisions have been reviewed by staff and it have been found to be acceptable and in legal form.

D. Recommendation and Alternatives: Staff recommends that the Planning Commission forward a positive recommendation to the City Council regarding the proposed revisions, with the following proposed motion:

<u>Positive Recommendation</u>

"I move to forward a **positive** recommendation to the City Council regarding these proposed revisions to the City's Standard Technical Specifications and Drawings."

<u>Alternative Recommendation with Modifications</u>

"I move to forward a **positive** recommendation to the City Council regarding these proposed revisions to the City's Standard Technical Specifications and Drawings with the following modifications:"

1. _____
2. _____
3. _____

<u>Negative Recommendation</u>

"I move to keep the City's Standard Technical Specifications and Drawings unchanged."

E. Attachments:

1. Proposed revisions to the City's Standard Technical Specifications and Drawings.

STANDARD
TECHNICAL SPECIFICATIONS
AND DRAWINGS
FOR
CITY OF SARATOGA SPRINGS, UTAH

UPDATED

July 16, 2019

CITY OF SARATOGA SPRINGS ENGINEERING DEPARTMENT
1307 N. Commerce Drive, Suite 200
Saratoga Springs, Utah 84045
Phone: (801) 766-9793
Fax: (801) 766-9794

TABLE OF CONTENTS

DEFINITIONS

DIVISION 00 - DESIGN STANDARDS

00500 DESIGN STANDARDS

DIVISION 01 - GENERAL REQUIREMENTS

01300 ADMINISTRATIVE REQUIREMENTS
01400 QUALITY REQUIREMENTS
01600 PRODUCT REQUIREMENTS
01700 EXECUTION REQUIREMENTS
01780 CLOSEOUT SUBMITTALS

DIVISION 02 - SITE CONSTRUCTION

02100 ROADWAY AND GENERAL EARTHWORK
02112 TRENCHING FOR PIPE WORK
02115 STRUCTURAL EXCAVATION
02116 FILL AND BACKFILL
02235 SANITARY SEWER SYSTEM
02335 STORM DRAIN SYSTEM
02340 MANHOLES AND COVERS
02350 STORM WATER TREATMENT SYSTEM
02355 STORM WATER DETENTION PONDS
02410 WATER DISTRIBUTION SYSTEM
02412 PRESSURE REDUCING VALVE STATION
02414 WATER METER VAULT
02415 DISINFECTION OF WATER DISTRIBUTION SYSTEM
02416 AIR-VACUUM VALVE STATION
02580 SECONDARY WATER SYSTEM
02586 BACKFLOW PREVENTER STATION
02621 GRAVEL SURFACING AND ROAD BASE
02631 GEOGRID
02641 BITUMINOUS PAVING
02651 BITUMINOUS, TYPE II SEAL COAT
02652 CONCRETE STREET IMPROVEMENTS
02724 AUTOMATIC SPRINKLING SYSTEM
02725 RESTORING WETLANDS AREAS
02726 LANDSCAPING
02727 RESTORING NATIVE AREA
02752 CHIP SEAL COAT
02821 VINYL FENCING
02824 ORNAMENTAL IRON FENCING
02828 MISCELLANEOUS EQUIPMENT FOR PLAYGROUNDS AND OTHER AREAS

DIVISION 03 - CONCRETE

03300 CAST-IN-PLACE CONCRETE

DIVISION 04 - FINISHES

04900 PAINTS AND COATINGS

DIVISION 05 - ELECTRICAL

05060 GROUNDING AND BONDING
05070 HANGERS AND SUPPORTS
05075 ELECTRICAL IDENTIFICATION
05123 BUILDING WIRE AND CABLE
05131 CONDUIT
05132 CONDUIT: FIBER OPTIC/COMMUNICATION
05133 POLYMER CONCRETE JUNCTION BOX
05138 BOXES
05139 CABINETS AND ENCLOSURES
05140 WIRING DEVICES
05155 EQUIPMENT WIRING
05210 ELECTRICAL UTILITY SERVICES
05412 ENCLOSED SWITCHES
05423 ENCLOSED MOTOR CONTROLLERS
05425 VARIABLE FREQUENCY CONTROLLERS
05443 PANELBOARDS
05510 INTERIOR LUMINAIRES
05520 EXTERIOR LUMINAIRES
05530 STREET LIGHTING
05540 OUTDOOR LIGHTING

STANDARD DRINKING WATER DETAILS

DW-1 DRINKING WATER PIPE TRENCH
DW-2 CONCRETE THRUST BLOCKS
DW-3 DRINKING WATER PIPE LOOP
DW-4 FIRE HYDRANT CONNECTION
DW-5 RESIDENTIAL METER CONNECTION- 3/4 X 5/8 INCH OR 1"
DW-6 METER VAULT 2-INCH
DW-7 METER VAULT 4-INCH
DW-8 METER VAULT 6-INCH
DW-9 METER VAULT 8-INCH
DW-10A PRESSURE REDUCING VALVE (PRV) STATION - 1 OF 2
DW-10B PRESSURE REDUCING VALVE (PRV) STATION - 2 OF 2
DW-11 DETECTOR CHECK VALVE
DW-12 AIR/VACUUM RELIEF VALVE
DW-13A 2" BLOW OFF VALVE
DW-13B TEMPORARY 2” BLOW OFF VALVE
DW-14 SAMPLING STATION
DW-15 CONCRETE COLLAR
DW-16 DRINKING WATER PIPE CASING

STANDARD STREET LIGHT DETAILS

LP-1A 14' LOCAL STREET LIGHT
LP-1B CONCRETE BASE FOR LOCAL STREET LIGHT
LP-1C LOCAL STREET LIGHT LUMINARE
LP-2A 20' COLLECTOR STREET LIGHT
LP-2B 20' COLLECTOR STREET LIGHT W/ BANNER ARM FOR COLLECTOR ROADS AND COMMERCIAL AREAS

LP-2C CONCRETE BASE FOR COLLECTOR STREET LIGHT
LP-2D COLLECTOR STREET LIGHT LUMINARE
LP-3A 28' ARTERIAL STREET LIGHT
LP-3B 28' ARTERIAL STREET LIGHT WITH BANNER ARM
LP-3C CONCRETE BASE FOR ARTERIAL STREET LIGHT
LP-3D ARTERIAL STREET LIGHT LUMINARE
LP-4 LOCAL STREET LIGHT CONNECTION
LP-5 COLLECTOR AND ARTERIAL STREET LIGHT CONNECTION
LP-6 LIGHT POLE BELOW GRADE BOXES INSTALLATION
LP-6A WIRELESS SUPPORT STRUCTURE-MONOPOLE FOR SMALL CELL WIRELESS FACILITIES

STANDARD LANDSCAPING DETAILS

LS-1 SPRINKLER SYSTEM MAINLINE ISOLATION VALVE 4" & LARGER
LS-2 SPRINKLER SYSTEM QUICK COUPLER VALVE
LS-3 SPRINKLER SYSTEM REMOTE CONTROL VALVE
LS-4 METER & CONTROLLER STAINLESS STEEL ENCLOSURE
LS-5 SATELLITE STAINLESS STEEL CONTROLLER ENCLOSURE
LS-6 SPRINKLER SYSTEM LARGE ROTARY HEAD
LS-7 MEDIUM & SMALL AREA SPRINKLER HEAD
LS-8 SPRINKLER SYSTEM MANUAL DRAIN
LS-9 SPRINKLER SYSTEM SLEEVING
LS-10 SPRINKLER SYSTEM PIPE/TRENCH
LS-11 SPRINKLER SYSTEM PIPE AND WIRE TRENCH
LS-12 SPRINKLER SYSTEM AUTOMATIC DRAIN
LS-13 TREE STAKING & PLANTING
LS-14 VINYL FENCE WITH MOW STRIP
LS-15 CONCRETE MOW CURB

STANDARD PRESSURIZED IRRIGATION DETAILS

PI-1 PRESSURIZED IRRIGATION PIPE TRENCH DETAIL
PI-2 CONCRETE THRUST BLOCKS
PI-3 1" SINGLE AND DUAL SERVICE LATERALS
PI-4 CONNECTION FOR PARKS & OPEN SPACE
PI-5A 1" SINGLE SERVICE LATERAL BOX
PI-5B 1 ½” DUAL SERVICE LATERAL BOX
PI-5C PARTS LIST FOR SINGLE AND DUAL SERVICE LATERAL BOXES
PI-6 2” SERVICE LATERAL
PI-7 4" METER VAULT
PI-8 AIR VACUUM RELIEF VALVE
PI-9 2" & 4" DRAIN VALVES
PI-10 RPZ BACKFLOW PREVENTOR FOR LATERALS
PI-11 RPZ BACKFLOW PREVENTOR FOR MAIN LINES
PI-12A 2" BLOW OFF VALVE
PI-12B TEMPORARY 2” BLOW OFF VALVE
PI-13 CONCRETE COLLAR FOR WATER VALVES
PI-14 PRESSURIZED IRRIGATION PIPE CASING

STANDARD STORM DRAIN DETAILS

SD-1 STORM DRAIN PIPE TRENCH
SD-2 GUTTER INLET BOX
SD-3 CLEANOUT BOX
SD-4 COMBINATION GUTTER INLET & CLEANOUT BOX

SD-5 INLET/OUTLET TRASH GRATES
SD-6 STORM DRAIN PIPE CASING

STANDARD SANITARY SEWER DETAILS

SS-1 SANITARY SEWER TRENCH
SS-2 PRE-CAST SANITARY SEWER MANHOLE
SS-2A CAST IN PLACE SANITARY SEWER MANHOLE
SS-3 SEWER SERVICE CONNECTION
SS-4 SEWER PIPE CASING

STANDARD STREET IMPROVEMENT DETAILS

ST-1 SIDEWALK AND CURB & GUTTER STANDARDS
ST-2A-D CURB & GUTTER
ST-3 WATERWAY
ST-4A SINGLE FAMILY RESIDENTIAL DRIVE APPROACH
ST-4B COMMERCIAL DRIVE APPROACH
ST-5A-E ADA ACCESSIBLE RAMP
ST-6 DEFECTIVE CONCRETE REPLACEMENT CRITERIA
ST-7 STANDARD INTERSECTION & UTILITIES
ST-8 LOCAL ROADWAY - 59' RIGHT-OF-WAY
ST-9 COLLECTOR- 77' RIGHT-OF-WAY
ST-10 MINOR ARTERIAL - 95' RIGHT-OF-WAY
ST-11 MAJOR ARTERIAL - 180' RIGHT-OF-WAY
ST-12 PRINCIPAL ARTERIAL - 180' RIGHT-OF-WAY
ST-13 INTERIM ARTERIAL - 180' RIGHT-OF-WAY
ST-14 STANDARD TEMPORARY TURN-AROUND
ST-15A TRAIL STANDARDS
ST-15B TRAIL STANDARDS FOR INTERIM ROADS
ST-16 STANDARD CUL-DE-SAC
ST-17 ROUNDABOUT: LOCAL ROADWAY- 59' RIGHT-OF-WAY
ST-18 ROUNDABOUT: COLLECTOR- 77' RIGHT-OF-WAY
ST-19 ROUNDABOUT: MINOR ARTERIAL- 95' RIGHT-OF-WAY
ST-20 ROUNDABOUT: MAJOR ARTERIAL ROADWAY- 180' RIGHT-OF-WAY
ST-21 ROUNDABOUT: TYPICAL CROSS SECTIONS
ST-22 SPEED TABLE
ST-23 LOCAL STREET TRAFFIC CALMING INTERSECTION
ST-24 77' RIGHT-OF-WAY NECKED INTERSECTION
ST-25 95' RIGHT-OF-WAY NECKED INTERSECTION
ST-26 STANDARD TEE PATCH
ST-27 UTILITY MARKERS
ST-28 STREET AND REGULATORY SIGNS
ST-29 SURVEY MONUMENT
ST-30 PRIVATE ROADWAY: W/O PARK STRIP - 45’ RIGHT-OF-WAY
ST-31 PRIVATE ROADWAY: W/ PARK STRIP - 53’ RIGHT-OF-WAY
ST-32 PRIVATE ROADWAY: RURAL-59’ RIGHT-OF-WAY
ST-33 PRIVATE INTERSECTION & UTILITIES
ST-34 URBAN, RURAL, AND WILDERNESS TRAILS

DEFINITIONS

ACCEPTABLE EQUAL or ACCEPTED EQUAL: In order to establish a basis of quality and specificity for some items mentioned in the Work, certain processes, types of machinery and equipment, brands, or kind of material may be mentioned on the Accepted Plans by designating a manufacturer by name and referring to his brand or model numbers. Such mention is not intended to exclude Materials wherever in the Specifications a manufacturer's name, brand or model is mentioned, it is to be understood that the phrase "acceptable equal" is assumed to follow thereafter whether or not it does in fact follow.

ADDENDA: Written or graphic documents issued and signed or initialed by the Engineer, that clarify, correct or change the Contract Documents.

AGREEMENT: The duly executed written agreement between two parties. Other Contract Documents may be attached to or referred to in the Agreement and made a part thereof as provided therein. The Agreement shall include those documents specifically referred to in the signed document between the parties.

ACCEPTANCE: Acknowledgement by the City that documents stamped “Accepted” are in general compliance with the City’s preparation requirements of those documents. It is not an acceptance of responsibility or liability for the completeness and accuracy of those documents. Responsibility and liability for engineering documents resides with the licensed professionals and the professional firms who prepare them.

APPROVED EQUAL: Equipment or material which, in the opinion of the City’s Representative, is equal in quality, durability, appearance, strength, design, performance, physical dimensions, and arrangement to the equipment or material specified, and will function adequately in accordance with the general design.

AS-BUILT DRAWINGS: Drawings which show the Project as actually constructed, and which include any and all changes made to the construction plans before and during construction.

BEST MANAGEMENT PRACTICE (BMP): One of potentially several acceptable practices that could be implemented to protect water quality and promote soil conservation.

CHANGE ORDER: A document, which is signed by authorized representatives of the Contractor and the City and which authorizes an addition, deletion or revision in the Work, or an adjustment in the sum due the Contractor, or the Project completion time, issued on or after the date of the Agreement.

CITY INSPECTOR: The authorized representative of the City or Engineer assigned to make detailed inspections of the Work performed, or of materials furnished by the Contractor.

CITY/OWNER: Wherever, in the Contract Documents the word "City" or "Owner" appears, it shall be interpreted to mean "City of Saratoga Springs", unless otherwise denoted.

HAZARDOUS MATERIALS. (a) Any substances defined, regulated or listed (directly or by reference) as "hazardous substances," "hazardous materials," "hazardous wastes," "toxic waste," "pollutant," "contaminant" or "toxic substances" or similarly identified as hazardous to human health or the environment, in or pursuant to any of the following statutes: (i) the Comprehensive Environmental Response, Compensation and Liability Act of 1980, 42 U.S.C. §9601 et seq. ("CERCLA"); (ii) the Hazardous Materials Transportation Act, 49 U.S.C. §1802, et seq.; (iii) the Resource Conservation and Recovery Act, 42 U.S.C. §6901 et seq.; (iv) the Clean Water Act, 33 U.S.C. §1251 et seq.; (v) the Clean Air Act, 42 U.S.C. §7401 et seq.; (vi) the Toxic Substances Control Act, 15 U.S.C. §2601 et. seq.; (vii) the Utah Air Conservation Act, U.C.A. §26-13-1 et. seq.; (viii) the Utah Water Pollution Control Act, U.C.A. §26-11-1 et. seq.; (ix) the Utah Safe Drinking Water Act, U.C.A. §26-12-1 et. seq.; (x) the Utah Solid and Hazardous Waste Act, U.C.A. §26-14-1 et. seq.; (xi) the Utah Hazardous Substance Mitigation Act, U.C.A. §19-6-301 et. seq.; (xii) the Utah Underground Storage Tank Act, §19-6-401 et. seq.; and/or (xiii) any amendments to such enumerated statutes or acts; and (b) Any other hazardous or toxic substance, material, chemical, waste, contaminant or pollutant identified as hazardous or toxic or regulated, under any other applicable federal, State or local environmental laws, including, without limitation, friable asbestos, polychlorinated biphenyl ("PCBs"), petroleum, natural gas and synthetic fuel products and by-products.

INSPECTED AND ACCEPTED or ACCEPTANCE: City recognition of conformance to all applicable City Standards.

LAND SURVEYOR: One who is duly and lawfully registered with the State of Utah Division of Occupational and Professional Licensing to perform land surveying within the State.

LAW: Any applicable City, County, State, or federal statutes or regulations governing anything relating to the Work embodied in the Agreement.

LOW-IMPACT DEVELOPMENT (LID): A development approach that promotes the implementation of BMPs that allow storm water to infiltrate, evapotranspire, or harvest and use storm water on site to reduce runoff from the site and protect water quality.

MATERIALS: The term “Materials” when used herein shall include the supply items and machinery and equipment required or used in the Work.

NOTICE OF AWARD: The written notice by the City to the apparent successful bidder stating that Contract Documents will be forthcoming for signature upon compliance with the conditions enumerated therein.

PAVEMENT: The uppermost layer of bituminous or Portland-cement concrete material placed on the traveled way or shoulders for a riding surface, whether rigid or flexible in composition. This term is used interchangeably with “surfacing.”

PAYMENT BOND, PERFORMANCE BOND: The accepted form of security furnished by the Contractor and its surety, as required in the Contract Documents guaranteeing respectively, payment and completion of Work.

PROFESSIONAL ENGINEER: A registered engineer who is licensed to practice in the State of Utah.

DIVISION 00

DESIGN STANDARDS

1.4 CITY ENGINEER'S AUTHORITY

A. The City Engineer has authority to review submitted Construction Drawings for compliance to these Design Standards and Construction Specifications.

B. The City Engineer shall note any changes to Construction Drawings, required to bring Construction Drawings into compliance with these Design Standards and Construction Specifications.

C. Required changes shall be made to Construction Drawings and returned to the City Engineer for final acceptance. Requirements for Construction Drawings can be found in Part 2.03 of this section.

D. The City Engineer shall have additional authority such as is stated in these Design Standards and Construction Specifications.

PART 2 EXECUTION

2.1 CODES AND STANDARDS

A. Design for each category shall be based on the following Codes and Standards:

1. Sanitary Sewer Systems.
   a. ASCE Manual and Reports on Engineering Practice No. 60, Gravity Sanitary Sewer Design & Construction;
   b. Utah State Department of Health Code of Waste Disposal Regulations;
   c. Utah Division of Water Quality Administrative Rules for Design Requirements for Wastewater Collection, Treatment and Disposal Systems;
   d. Currently Adopted Plumbing Code; and
   e. National Electrical Code.
2. Drinking and Secondary Water Systems.
   a. State of Utah Administrative Rules for Public Drinking Water Systems;
   b. Currently Adopted Plumbing Code; and
   c. National Electrical Code.
3. Storm Drainage Systems.
   a. City's Standards and Technical Specifications, Storm Water Management Plan, and ~~Chapter 18.06~~ the Storm Water Regulations of the City Code.
   ~~a.~~b. All work not specifically-described in the City's Standards and Technical Specifications, Storm Water Management Plan, and the Storm Water Regulations of the City Code shall conform to the Mile High Flood District Urban Storm Drainage Criteria Manual.
4. Transportation System
   a. Guidelines, procedures and design criteria as defined by AASHTO, ITE, MUTCD, and ADA.

B. All Work not specifically-described in these design Standards and Technical Specifications shall conform to the APWA "Manual of STANDARD SPECIFICATIONS" as published by the Utah Chapter of the American Public Works Association. The latest edition at the time of the work shall be used.

~~B.~~ C. All Work not specifically-described in these design Standards and Technical Specifications or the APWA "Manual of STANDARD SPECIFICATIONS" shall conform to recognized and generally-accepted good engineering practices.

2.2 DESIGN STANDARDS

A. Infrastructure designs shall conform to the most recent City of Saratoga Springs current Capital Facilities and Master Plans; and to these design Standards and Technical Specifications.

1. These Design Standards are design guidelines. The City's design standards do not relieve the developer's engineer from being responsible for examining and understanding local project conditions, confirming the correlation of all design standards with the techniques of construction, coordination of the standards with that of all other industry standards, and for the complete and satisfactory design of the project.

B. SANITARY SEWER SYSTEMS:

1. The impact of any proposed sewer system, on the existing sewer system, will be reviewed by the City Engineer. The developer may be required to add additional off-site sewer systems in order to provide adequate sewer service to his development.

   a. Areas that will be serviced through the proposed development will be considered and the method of service to those areas will be determined by the City Engineer. Increased system size may be required by the City Engineer for future development.

   ~~a.~~b. Sewer lift stations are prohibited. Because the operation of a sewer lift station is a significant, long-term cost for the City and will affect the City budget long term, any exceptions to this prohibition must be specifically authorized by the City Council pursuant to its legislative discretion.

2. The minimum size of sewer main line shall be 8-inch diameter.

3. All sewer pipes shall be sized to a maximum 80% capacity.

4. Sewer lines shall be designed to maintain a minimum velocity of two feet per second (2 fps). The design flow shall be calculated based on equivalent residential connections in addition to a peaking factor depending on the size of sewer pipe. For 8-inch pipe, the peaking factor shall be 4.0. For pipe larger than 8-inches but less or equal to 15-inches, the peaking factor shall be 2.5. For all pipe larger than 15-inches, the peaking factor shall be 2.0.

5. The minimum sewer slopes shall be as follows:

   a. 8-inch sewer lines – 0.00334 foot/foot
   b. 10-inch sewer lines – 0.00248 foot/foot
   c. 12-inch sewer lines – 0.00194 foot/foot
   d. 15-inch sewer lines – 0.00144 foot/foot
   e. 18-inch sewer lines – 0.00113 foot/foot
   f. 21-inch sewer lines – 0.00092 foot/foot
   g. 24-inch sewer lines – 0.00077 foot/foot
   h. Larger than 24-inch per City Engineer's recommendation

6. The minimum sewer depth shall be 13.0 feet under normal conditions.

   a. In areas of shallower sewer, the following note shall be added to the development plat: "Shallow Sewer Depths! Contractor shall verify sewer depths before excavating for basement. Home(s) with basement may not have sewer

service available for basement."

b. The City Engineer may increase the minimum sewer depth if required to meet overall system requirements.

7. A minimum of three feet of cover shall be required over all sewer lines, where acceptable to the City Engineer.

8. Sewer shall be located at 10-foot minimum horizontal distance from drinking waterlines.

9. Where possible, sewer shall be located at 10-foot minimum horizontal distance from all other public utilities, including but not limited to storm drains, and secondary water lines.

~~9.~~10. State approval is required before sewer mains or laterals can be constructed over the top of culinary lines.

~~10.~~11. Sewer main lines shall be extended to property lines to service future Development and end with manhole.

~~11.~~12. In the locations where the sewer leaves the public right-of-way a twenty-foot wide sanitary sewer easement will be required. This easement shall be centered on the sewer line. Sewer easements shall extend ten feet beyond dead end manholes. Show easements on the development plat and on the City's Standard Easement forms, which grant the easements to the City. Easements must be executed and returned to the City Office prior to acceptance being granted.

~~12.~~13. No plugged ends of sewer main lines will be allowed. Manholes must be constructed at the ends of sewer lines.

~~13.~~14. The minimum size manhole shall be 4-foot diameter.

~~14.~~15. 5-foot diameter manholes shall be used in the following situations:

a. At all intersections of three or more 8-inch or larger pipe lines.
b. Where the deflection angle of the pipe line exceeds 90 degrees.
c. When both items "a" and "b" are designed in the same manhole, a six-foot manhole is required.

~~15.~~16. A 12 foot paved access road shall be constructed to all manholes and shall be capable of supporting H-20 loading. Where future development renders the vertical alignment of an access road uncertain, the pavement requirement can be postponed until the adjacent land develops. However, the developer shall be required to post a cash only bond with the City to guarantee completion of such pavement with an automatic escalation clause to account for inflation and cost increases.

~~16.~~17. Where new sewer lines are connected to existing sewer lines, a 5-foot diameter manhole shall be constructed over the existing sewer line.

~~17.~~18. Manhole Spacing:

a. The maximum manhole span shall be 400 feet, as measured from center to center of manholes.
b. When sewer line depth is between 20' and 29', decrease the manhole span to 350'. When depths of greater than 30' are encountered, decrease the span to 300'.

~~18.~~19. Unless otherwise approved by the City Engineer, the minimum drops through manholes shall be as follows:

i. Greater than 90° - 0.3 foot drop
ii. 75° - 90° manholes – 0.2 foot drop
iii. 25° - 74° manholes – 0.1 foot drop
iv. 0° - 24° manholes – the grade through the manhole shall be equal to the incoming pipe slopes with a maximum drop of 0.20 feet across the manhole.

~~19.~~20. Where pipes of different diameters melding laterals connect into a manhole, the inside top of the smaller pipe shall match the inside top of the larger pipe.

~~20.~~21. Where incoming slopes at manholes are greater than or equal to 5 percent and the deflection angle within the manhole is greater than or equal to 45 degrees but less than 90 degrees, a five-foot manhole with an extra deep trough is required.

a. Where incoming slopes at manholes are greater than or equal to 5 percent and the deflection angle within the manhole is greater than 90 degrees, a six-foot manhole with an extra deep trough is required.

~~21.~~22. The benching of the extra deep trough shall be located 25% higher than the diameter of the incoming pipe. The minimum lateral size shall be 4-inch for residential connections; and 6-inch for commercial and industrial connections.

a. Sewer lateral shall have a minimum slope of 2%.

~~22.~~23. Sewer laterals shall tie directly into manholes in cul-de-sacs and at dead end manholes.

~~23.~~24. Sewer laterals may tie directly into manholes wherever possible and practical.

~~24.~~25. Sewer laterals shall conform to the requirements of the Utah State Department of Health Code and the currently adopted plumbing code; with cleanouts at not more than 100-foot spacing; and no more than two bends in excess of 45 degrees without a cleanout.

~~25.~~26. Each building and/or unit of separate ownership shall require a separate sanitary sewer lateral.

~~26.~~27. Grease traps shall be required on all commercial development where food service uses are anticipated.

a. Sampling manholes shall be installed downstream of all grease traps.
b. Sampling manhole & grease trap shall be constructed as per TSSD Standards & Specifications and it shall be accepted and inspected by the Timpanogos Special Service District.
c. Sampling manhole and grease trap must inspected and maintained per the Utah Health Code and Utah County Health Department regulations.

~~27.~~28. Force main discharge manholes shall be epoxy lined or acceptable equal.

~~28.~~29. Sewer Mains shall be located as indicated on the City's Standard drawings and shall be located in ROW or dedicated open spaces.

C. DRINKING WATER SYSTEMS:

1. The State of Utah Administrative Rules for Public Drinking Water Systems, R309-510, provide minimum sizing requirements for drinking water facilities. All pipe and appurtenances shall be ANSI/NSF 61 certified.
2. Water systems shall be sized as described in the City's Capital Facilities & Master Plans and shall be a minimum of 8" in public right-of-way.
3. The minimum fire flow shall be as per state standards. The fire flow may be increased as determined by the City Fire Marshal.
4. The minimum operating pressure in all parts of the system during peak day demand is to be 40 psi.

indicated on the standard drawings.

17. Air-Vacuum Valve Stations:
    a. Air-vacuum valve station venting shall be located in a landscaped area near the edge of the right-of-way (ROW).
    b. Air-vacuum valve stations shall be placed at high points on transmission lines and at other locations as required for proper system operation.
    c. Air-vacuum valve stations shall be constructed as indicated on the drawings.
18. Drains shall be installed at all low points on pressure irrigation lines.
19. Secondary water main lines shall be extended to property lines to service future Development and end with blow-off.
20. Permanent dead-end mains shall not exceed 600 feet in length.
21. The maximum allowable deflection of pipe joints shall be less than or equal to half of the manufacturer recommended maximum deflection.

E. STORM DRAIN SYSTEMS:

1. The impact of any proposed storm drain system on the existing drainage system will be reviewed by the City Engineer. The developer may be required to add additional off-site storm drain systems in order to provide adequate drainage control for his development.

2. Areas that will be drained through the proposed development will be considered and the method of drainage for those areas will be determined by the City Engineer. Increased system size may be required by the City Engineer for future development.

~~2.~~3. Public and private storm drainage shall not be comingled unless the private property owners choose to accept public storm drainage onto their property, grant an easement to the City accepting the drainage as theirs, and release and indemnify the City from potential liabilities associated with it.

~~3.~~4. Physical parameters of a drainage basin, such as drainage basin area, length, and slope shall be obtained using a current topographic map and existing storm drain facilities. In areas of proposed development, physical parameters shall be obtained from the development concept.

~~4.~~5. For storm drain design, rainfall depth and intensity shall be defined as shown in the Table 1.

Table 1. Precipitation Frequency Estimates with 90% Confidence Intervals (inches)

Duration	Average Recurrent Interval		
	2-yr	10-yr	100-yr
5-min	0.15	0.26	0.51
10-min	0.23	0.40	0.78
15-min	0.28	0.49	0.96
30-min	0.38	0.66	1.29
60-min	0.47	0.82	1.60
2-hr	0.57	0.92	1.73
3-hr	0.64	0.98	1.74
6-hr	0.81	1.16	1.84
12-hr	0.98	1.39	2.06
24-hr	1.10	1.51	2.11

~~8.~~9. Cleanout boxes shall be located at every change in alignment or slope and at junctions with other lines.

~~9.~~10. Inlet boxes shall be placed as follows:

a. Spaced at no more than 400 feet apart to collect sheet flow of storm water.
b. Located at the uphill end of curb returns, unless one is already needed on the downhill side due to slope constraints
c. On lot lines, where practical.

~~10.~~11. Maximum spans between structures shall be 400 feet from center to center of structures.

~~11.~~12. All storm drains under pavement or curb shall be constructed with reinforced concrete pipe; with minimum size of 15-inch diameter.

~~12.~~13. Storm drain lines shall be designed such that the maximum velocity does not exceed 20 ft/sec and that the minimum velocity is at least 3 ft/sec.

~~13.~~14. The minimum pipe slopes shall be per Table 5:

Table 5. Minimum Pipe Slopes in Concrete Storm Drains

Pipe Size (in)	Full Pipe Flow (cfs)	Minimum Slopes (ft/ft)
8	1.1	0.0075
10	1.6	0.0056
12	2.4	0.0044
15	3.7	0.0032
18	5.3	0.0026
21	7.2	0.0021
24	9.4	0.0017
27	11.9	0.0015
30	14.7	0.0013
33	17.8	0.0011
36	21.2	0.0010
42	28.9	0.0008
48	37.7	0.0007
54	47.7	0.0006
60	58.9	0.0005
66	71.3	0.0005
72	84.8	0.0004

~~14.~~15. Minimum cover shall be as per manufacturer's recommendation over all reinforced concrete drain lines.

~~15.~~16. Storm drains shall be located as indicated on the City's Standard drawings and shall be located in ROW or dedicated open spaces.

~~16.~~17. Where pipes of different diameters connect into a drainage structure, the inside top of the smaller pipe shall match the inside top of the larger pipe.

~~17.~~18. A 12 foot paved access road shall be constructed to all manholes and shall be capable of supporting H-20 loading. Where future development renders the vertical alignment of an access road uncertain, the pavement requirement can be postponed until the land develops. However, the developer shall be required to post a cash only bond with the City to guarantee completion of such pavement with an automatic escalation clause to account for inflation and cost increases

~~18.~~19. Sump manholes designed to infiltrate water are not permitted.

~~19.~~20. Storm drain lines shall be extended to property lines to accommodate future development and shall end at a manhole.

~~20.~~21. In the locations where the storm drain leaves the public right-of-way a twenty-foot wide drainage easement will be required. This easement shall be centered on the drain line. Drainage easements shall extend ten feet beyond dead end structures. Show easements on the development plat and on the City's Standard Easement forms, which grant the easements to the City. Easements must be executed and returned to the City Office prior to final acceptance being granted.

~~21.~~22. Storm Water Treatment Systems shall be constructed at all new points of connection to the City's Storm Drain System and prior to any discharge to a drainage, river, or lake. Treatment systems shall meet the following criteria:

a. Treatment systems shall be designed to treat all of the flow from developed areas with no bypass into the City storm water system of the treatment design storm parameters.
b. Treatment systems shall be designed to 80% of the total suspended solids (TSS) 110 microns or larger from the storm water.
c. Treatment systems shall be designed to remove the discharges of oil that cause a film or sheen upon or cause discoloration of the surface of the water.
d. Treatment systems shall be designed to remove all floatables from the storm water.
e. Treatment systems shall be sized to treat 100 percent of the first flush (2-year storm event) and to pass the 100 year peak flow with no washout of stored pollutants.
f. Only products that have been approved for pretreatment by the Washington Department of Ecology under general use level designation (GULD) or conditional use level designation (CULD) shall be allowed.

~~22.~~23. Energy dissipation is required at all enclosed-to-open-channel and open-to-enclosed-channel transitions and shall be designed according to ~~Urban Drainage and~~the Mile High Flood ~~Control~~ District Urban Storm Drainage Criteria Manual.

~~23.~~24. Detention and Retention Systems.

a. The capacity of all detention systems shall be sufficient to contain the anticipated runoff volume from the 100-year storm event, using the methods previously described, over those portions of the gross aggregate area under design; with a maximum release of 0.2 cfs/acre. A lesser release rate may be required based on system capacity in the subject area of the system.
b. Public and private systems shall be constructed as described and as shown in the City's Standards.
c. Flood control detention is not required when there is a surface runoff route directly to Utah Lake or the Jordan River, excluding all tributary channels that might receive flow downstream of the subject area.
d. A pipeline is required under ponds, or a concrete-lined low-flow channel through

the bottom of ponds, to convey flows that are less than the capacity of the outlet.

e. Detention system capacity may not be reduced due to evaporation.

f. Ponds are to be landscaped per City's Standards except for above-ground detention in private parking lots.

g. Provide access roads to all inlet/outlet structures with a maximum slope of 15 percent.

h. All ponds, except for above-ground detention in private parking lots that spill to a street, shall have a minimum of 1' of free board above the 100 year high water elevation. However, above-ground detention ponds in private parking lots shall provide 1' of freeboard to the finished floor of habitable structures.

i. Above-ground detention ponds in private parking lots shall have a maximum ponded depth of 8 inches in parking stalls.

j. Maximum interior and exterior slopes shall be 3:1.

k. Detention ponds may not be located within residential lots except for a single-phase subdivision. Detention ponds on residential building lots shall be designed pursuant to City Standards. The property owner of the residential lot on which a detention pond is located shall be responsible to maintain all surface improvements. This responsibility shall be noted on the subject lot on the plat, and easements shall be granted to the City for all underground improvements. The City shall maintain underground improvements.

l. A structural BMP must be placed upstream of the orifice plate to catch trash/debris.

m. Orifice plates must be located such that they can be cleaned off when the pond is full. The minimum size of orifice opening shall be 3.14 square inches. Every effort shall be made by the engineer to minimize the head over the minimum size orifice.

n. ~~If allowed by the City, retention~~LID systems shall be privately-owned-and operated.

o. Underground storage systems that are not designed to infiltrate water into the ground shall be lined with a durable impermeable barrier. Geomembrane systems shall include a PVC or HDPE liner that is at least 140 mils thick with a needle-punched non-woven geotextile protective layer.

p. ~~Retention~~ LID systems are ~~allowed~~ required and must ~~if they~~ retain ~~no more than~~at least ~~0.50~~0.41 inches of rain if they ~~and~~ are shown to be feasible using the City's outline for "~~Storm Water Retention and Infiltration~~ Low-Impact Development Systems Feasibility Study," which shall include the following content:

i. General

(a). Description of Location. The report must clearly identify the location of the development site by address. Latitude and Longitude coordinates are to be provided if an address is not available or applicable. The report must include an aerial image of the site showing property boundaries, adjacent developments or reference points including roads, and the locations of the infiltration site(s).

(b). Topography. The report must describe the pre and post-development site topography including vegetative types and land surface contours at a minimum of 1-foot intervals.

(c). ~~Maximum~~Minimum Allowable Retention Volume. The ~~maximum~~minimum allowable retention volume shall be ~~0.55~~0.41 inches across the subject area, which is the ~~90~~80th percentile storm depth for the Saratoga Springs vicinity.

identifies the nature of subsurface materials encountered. The cross-section must show any zones that could hinder or promote water infiltration.

(b). Impact on Adjacent Developments. Subsurface conditions must be investigated to demonstrate little or no impact on adjacent developments resulting from the installation of an infiltration system. At a minimum, negative impacts resulting from flooding due to increased water levels, water moving through highly permeable subsurface channels, and/or the expansion or collapse of soils promulgated by the addition of the infiltrated water must be considered.

~~(c).~~ Long-Term Storm Water Management ~~Operation and Maintenance~~ Plan. Provide a plan, using the Utah Storm Water Advisory Committee template~~,~~ as modified by the City of Saratoga Springs, ~~An Operation and Maintenance Plan is to be provided that~~ that will ensure the long-term viability of the storm water infiltration facilities. ~~includes the following:~~

~~(i) An inventory of the facilities to be used for storm water infiltration.~~

~~(ii) A description of the routine maintenance required for each storm water infiltration facility.~~

~~(iii) A schedule of maintenance for each storm water infiltration facility.~~

~~(iv)~~(c). ~~Inspection requirements for each storm water infiltration facility.~~

iv. Control Through Rain Harvesting

(a). ~~The Utah State law currently allows the permitting, capture and storage of up to 2,500 gallons of rainwater at any given site. The engineer is to analyze and document the ability and feasibility of the development to practically capture, store and use rainwater on-site derived from the 90th percentile storm.~~ Since 2010, rainwater harvesting is legal in the State of Utah so long as the requirements of Utah Code § 73-3-1.5 are met and, if required by such section, the property owner registers with the State of Utah. The Engineer must analyze and document the ability and feasibility of the development to practically capture, sort, and use rainwater on site. Depending on the volume of rainwater collected and stored for beneficial use, the new or redevelopment must register with and meet the requirements of the Utah Division of Water Rights to harvest rainwater, found on their website: http://waterrights.utah.gov/forms/rainwater.asp.

v. Control Through Evaporation

(a). The engineer is to evaluate and document the ability of the development to practically and feasibly capture, store, and evaporate rainwater on site.

vi. Summary and Conclusions

(a). The report will include a summary and concluding statement from a qualified individual regarding the feasibility of on-site retention of storm water as required by the State General Permit via infiltration, rain harvesting, and evaporation. This individual is considered qualified if he or she:

(i) Is located in Utah.

(ii) Has a bachelor's degree in civil engineering or geology.

(iii) Has specialized education in surface and ground water.

(iv) Has specialized experience with retention and infiltration.

(v) Has minimum 10 years' experience.

~~(vi) Has minimum of 3 relevant infiltration feasibility studies or investigations within the last 5 years.~~

~~(vii) Has minimum of 3 ground water model investigations within Utah in the last 5 years.~~

(b). The conclusions and recommendations shall take into account and consider all data and issues presented within the report as well as the general experience and expertise of the engineer.

(c). If meeting the retention standard is infeasible, a rationale shall be provided for the use of alternative design criteria. The new or redevelopment project must document and quantify that infiltration, evapotranspiration, and rainwater harvesting have been used to the maximum extent feasible and that full employment of these controls are infeasible due to constraints~~. LID infeasibility may be~~ such as ~~due to one or more of the following conditions:~~ high groundwater, drinking water source protection areas, soil conditions, slopes, accessibility, excessive costs, or others.

vii. Engineer's Certification

(a). "I hereby certify that this report for the onsite retention and infiltration of storm water of this development was prepared by me (or under my direct supervision) according to good engineering practices and applicable engineering standards. I understand that the City assumes no responsibility or liability whatsoever for the feasibility and long-term viability of the facilities addressed herein."

25. Redevelopment projects that disturb greater than or equal to one acre, including projects less than an acre that are part of a larger common plan of development or sale which collectively disturbs land greater than or equal to one acre must provide a site-specific and project-specific plan aimed at net gain to onsite retention or a reduction to impervious surface to provide similar water quality benefits. If a redevelopment project increases the impervious surface by greater than 10 percent, the project shall manage rainfall on-site, and prevent the off-site discharge of the net increase in the volume associated with the precipitation from all rainfall events less than or equal to the 80th percentile rainfall event. This objective must be accomplished by the use of LID practices.

~~24.~~26. Install fabricated galvanized steel trash grates over the ends of all exposed pipes, 15-inch and larger.

~~25.~~27. The minimum size manhole shall be 4-foot diameter.

~~26.~~28. 5-foot diameter manholes shall be used in the following situations:

a. At all intersections of three or more 8-inch or larger pipe lines.

b. Where the deflection angle of the pipe line exceeds 90 degrees.

c. When both items "a" and "b" are designed in the same manhole, a six-foot manhole is required.

~~27.~~29. Land that lies within a drainage corridor or natural drainage course shall be left in its natural state whenever possible. The ability of the land to naturally channel, retain and drain storm water shall be maintained and enhanced in ways that augment the existing natural system.

a. No subdivision or site design will be permitted that would create a flood or flooding hazard to adjoining or nearby properties including public roads and property.

b. The widths of a constructed waterway shall be sufficiently large to adequately channel runoff from a 100-year storm event with at least 2' of freeboard. Adequacy shall be determined by the expected runoff when full development of the drainage area is reached.

c. No fences or structures shall be constructed across the waterway that will reduce or restrict the flow of water.

d. The banks of the waterway shall be protected with permanent vegetation. If vegetation will not function properly, rip-rap shall be used.

e. The banks of the waterway ~~should~~shall not exceed three (3) feet horizontal to one (1) foot vertical in gradient.

f. The gradient of the waterway bed should not exceed a grade that will result in a velocity that will cause erosion of the banks of the waterway.

g. The bed of the waterway should be protected with turf, sod, or rip-rap. If turf or sod will not function properly, rip-rap shall be used.

h. If the flow velocity in the waterway is such that erosion of the turn side wall will occur and said velocity cannot be decreased by velocity control structures, then rip-rap shall replace turf on the side walls.

F. STREET SYSTEMS:

1. Streets systems, consisting of curb and gutter, sidewalks, ADA ramps, street pavement, and appurtenant items shall be designed as described below, as shown in Tables 4 - 8, and as shown in the City Standards.

   a. Table 6 shows the ROADWAY DESIGN STANDARDS; including right-of-way widths, pavement widths, street grades, and appurtenant design criteria.

   b. Table 7 shows the access management standards for all roadway types.

   c. Table 8 shows the subgrade protection layer required to be placed to protect subgrade soils. Prior to placement of any typical pavement section, a subgrade protection layer must be placed. Directions for this are outlined on Table 8.

   d. Table 9 shows the typical pavement sections required for the different categories of traffic. Different options are provided for some of the sections.

   e. Table 10 shows the Geosynthetic Requirements for Type 1 and 2 geogrids if those options are utilized.

2. Streets shall be constructed with asphaltic concrete, untreated base course, and granular borrow material for sub-base and/or subgrade protection, and a geotextile as required.

   a. Thickness of each course shall be determined based on the subgrade and pavement classification. Table 6 outlines the standard design standards. Table 8 outlines the required subgrade protection based on the design CBR of the subgrade. Table 9 outlines the required pavement section based on classification of the roadway.

   b. Thickness may need to be increased beyond the City Standards if recommended by a geotechnical engineer, but must be accepted by the City Engineer.

3. No new street pavement will be cut into for three years after acceptance of pavement.

4. Street light locations shall be at intersections and every 300 feet, placed on alternating sides of streets, or 600 feet on the same side of the street:

   a. At every intersection, corner, and any bends greater than 30 degrees in the road. The spacing requirements shall be met accordingly once these areas are developed.
   b. Shall be installed at property lines where attainable.
   c. Shall be a minimum of 5 feet from any tree. Branches may need to be pruned as determined by the engineering inspector in the field at the time of installation
   d. Shall not be installed within 5 feet from the edge of any driveway.
   e. Any structure such as block walls, fences, retaining walls, etc., shall leave a minimum of eighteen (18) inches to the face of the street light pole on all sides.
   f. Wherever there is an overhead utility that may conflict with the installation of the street light circuits and/or street light poles, those conflicts must be resolved between the developer and the utilities involved before the street light bases are constructed at no expense of the City or Rocky Mountain Power. The resolution must be approved by the City and Rocky Mountain Power.

~~f.~~5. Fiber optic/communication conduit is required on streets categorized as arterial and collector per City standards drawings and specifications.

~~5.~~6. Type 2 slurry seal shall be placed on all streets upon completion of paving.

~~6.~~7. Because preference is given to pedestrians, a driveway approach is required for all private accesses (APWA Plan 225 for commercial accesses and private streets, and City Standard DWG ST-4A for single-family residential accesses) unless recommended otherwise by the City Engineer, based on site-specific considerations, such as:

   a. Speed, slope, and width of the adjacent street
   b. Width of the proposed access
   c. Volume across the proposed access
   d. Drainage.

~~7.~~8. Curb returns adjacent to ADA ramps shall have a maximum slope of 2% where possible. Where the base of the curb ramp or the edge of the flush landing must join an intersection of two streets with running grades greater than 2 percent, the base of the curb ramp or the edge of the flush landing may be warped to meet the street running grade. Every effort shall be made to minimize this grade by warping the street cross slope plus or minus 4~~2~~% on both legs of the intersection.

~~8.~~9. The following table serves as a guide to design professionals by providing a summary of the City of Saratoga Springs Street Design Standards. These Standards are required unless specifically accepted otherwise by the City of Saratoga Springs City Council. In the absence of standards specified by the City, street design shall conform to the latest edition of the American Association of State Highway and Transportation Officials (AASHTO) “A Policy on Geometric Design of Highways and Streets.” Other published professional standards, i.e. ITE, ASCE, may be considered at the sole discretion of the City Engineer.

TABLE 6

Roadway Design Standards				
DESIGN ELEMENT	LOCAL (Class I)	COLLECTOR (Class II)	MINOR ARTERIAL (Class III)	MAJOR & PRINCIPLE ARTERIAL (Class IV)
Posted Speed	25	30	40	55
Typical Section Elements				
ROW Width	59'	77'	95'	180'
Pavement Width	29'	44'	44'	82' – 106'
Number of Lanes	2	3	3	5 & 7
Side Cut/Fill Slopes	3:1 up to 5 feet high and 2:1 above 5 feet high			
20 Year ESAL Requirement	60,000	250,000	700,000	2,000,000
Vertical Design Elements				
Vehicle Design	Passenger, School Buses, Delivery trucks, dump Trucks	Passenger, School Buses, Delivery trucks, Dump/Concrete Trucks	Passenger, School Buses, Delivery Trucks, Dump / Concrete Trucks	Passenger, School Buses, Delivery Trucks, Dump/Concrete Trucks, Semi Loads
Minimum Centerline Grade	0.5%			
Maximum Centerline Grade	12%*	8%	7%	5%
Maximum Centerline Grade Across Designated Crosswalks	5%	4%		
Maximum Grade in Cul-de-Sacs	5%	Not Allowed		
Maximum Centerline Grade Break w/o Vertical Curve	1%	0.5%	0.25%	
Maximum TBC Grade Break w/o a Vertical Curve**	2%	2%	2%	
Minimum Crest Vertical Curve "K" Value	19	Varies with design speed		
Minimum Sag Vertical Curve "K" Value	37	Varies with design speed		
Minimum Length of a Vertical Curve	60'	3 times the design speed		
Horizontal Design Elements				

Minimum Mid-Block Centerline Curve Radius	100'	Varies with design speed and superelevation		
Maximum Superelevation Rate	2%	~~6~~4%		
Intersections				
Intersection Sight Distance	Refer to AASHTO: A Policy on Geometric Design of Highways and Streets, Latest Edition			
Minimum Signalized Intersection Spacing	N/A	1,320’	2640’	2,640’
Corner Curb Radius	25	25	35	40
Minimum Angle of Intersection	60°	80°		
Minimum Offset Between Intersections	150'	Study Required		
Maximum Centerline Offset	5'	2’		
Maximum Centerline Grade***	5%	4%		
Minimum Corner Radius at TBC	25'	30'		
Vertical Tie-In	Lower streets shall match the centerline crowns in an intersection. Higher streets shall tie in 10’ off the centerline of local streets and at the edge of the outside travel lane of other streets.			

*A maximum running slope of 15% is allowed in purely-residential areas. It must be shown how bus service is provided to areas with streets greater than 10%.
**Maximum grade break of 2% along TBC with Minimum length of 25 feet between breaks.
***Grade must extend to the PC/PT of the intersecting street.

Table 7: City of Saratoga Springs Access Management Standards

Functional Classification	Minimum Driveway Spacing (feet)[1,2,3,4]			Street Unsignalized Intersection Spacing (feet)	Geometric Design of Driveway Access[6]						Minimum Signal Spacing (feet)
					Residential Driveways			Commercial, Retail, or Multi-family Driveways			
	Upstream and Downstream (Desirable feet)	Opposing Upstream (feet)	Opposing Downstream (feet)		Approach Width (feet)[6]	Edge Clearance (feet)[7]	Curb Return Radius (feet)	Approach Width (feet)[6]	Edge Clearance (feet)[7]	Curb Return Radius (feet)	
Principal Arterial/Freeway Interchange Areas	State of Utah Highway Access Management Standards Apply (see Tables 9 & 10)				State of Utah Highway Access Management Standards Apply (see Tables 9 & 10)						
Major Arterial w/o Median Barrier	350	175	160	660	12 min 30 max	6 min	10 min 15 max	Two Way 25 min 40 max One Way 16 min 30 max	20 min	30 min 60 max	2640
Major Arterial w/ Median Barrier	200	130	160	400							2640
Minor Arterial w/o Median Barrier	200	115	105	660							1320
Minor Arterial w/ Median Barrier	200	65	105	400							1320
Collector w/o Median Barrier	150	105	90	250							1320
Collector w/ Median Barrier	150	50	70	150							1320
Local Collector w/o Median Barrier	85	105	90	250							1320
Local Collector w/ Median Barrier	85	50	70	150							1320
Local w/ or w/o Median Barrier	-	-	-	150							N/A

1. Driveway spacing is measured as shown in Figure 1.
2. Corner clearance requirements for access points should meet or exceed the minimum driveway spacing requirements. Curb cuts on major arterials should be spaced at distances greater than 230 feet apart, measured from face of curb to face of curb, with the preferred distance being 300 feet.
3. For corner properties, access to public streets should be provided from the lesser (lowest functional classification) street.
4. Driveways in right-turn lane transition areas should be discouraged.
5. For the benefit of traffic safety and flow, access points may be required to be designed to prohibit certain types of turning movements.
6. Wider driveway widths may be permitted to accommodate additional turning and/or acceptance lanes.
7. Distance between side property line and edge nearest drive as measured along traveled way.

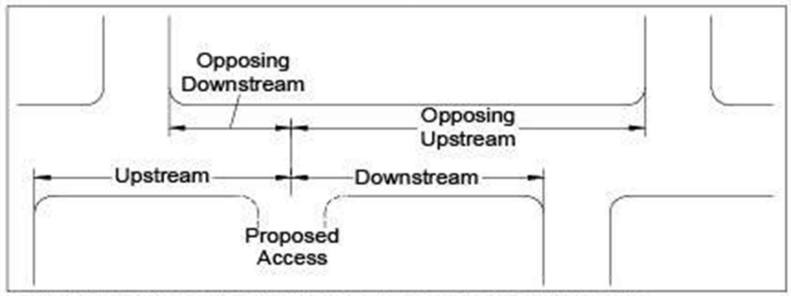

Figure 1: Measurements for Minimum Access Spacing Standards

TABLE 8

(Subgrade protection layer must be placed over the subgrade soils prior to placement of the pavement section. A design CBR must be determined by a geotechnical engineer. Based on this CBR value, the chart below provides how much Granular Borrow must be placed to adequately support the typical sections referenced in Table 6. If the in-situ CBRs of the subgrade are found to be softer than the design value, those values should be used.)

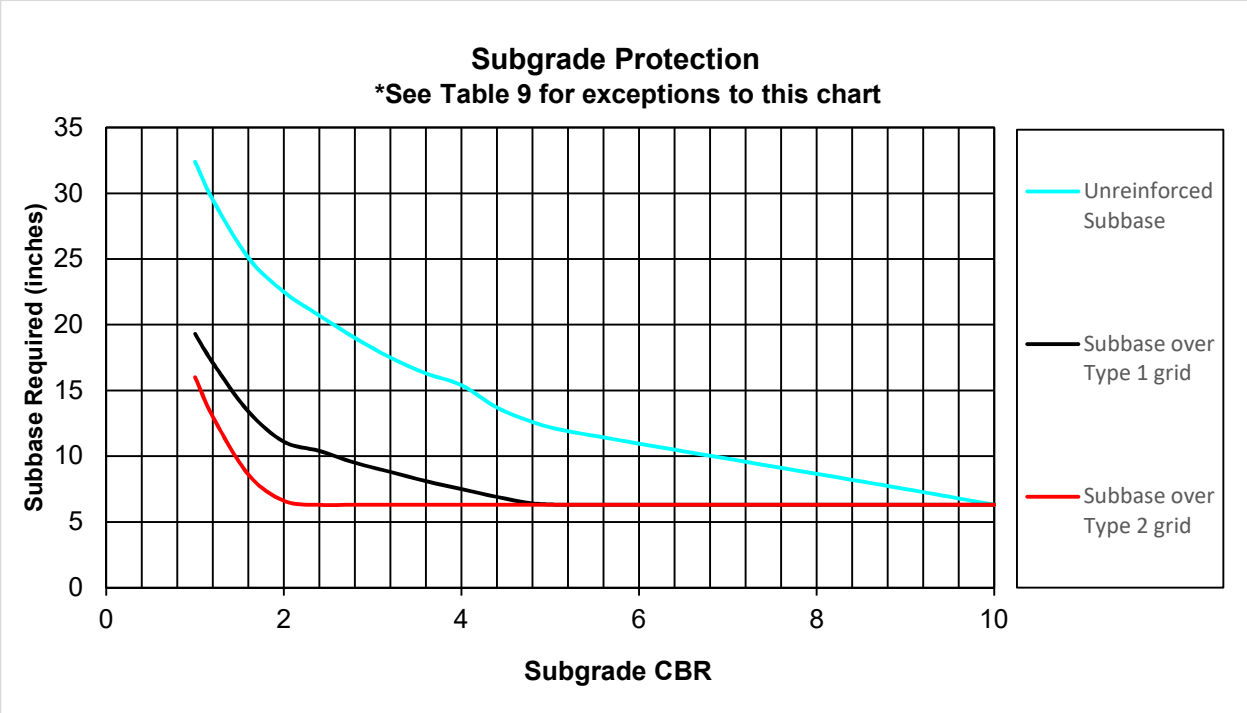

TABLE 9

Minimum Pavement Sections Based on Classification

(The following section(s) must be placed on top of the subgrade protection layer outlined in Table 8)

Residential Typical Section (Class I)
3” AC (Asphalt Concrete) 8” UTBC (Untreated Base Course) Properly-Prepared Subgrade (for CBR values greater than 7%, subgrade protection not required)

Collector Typical Section Options (Class II)	
4” AC 8” UTBC Properly-Prepared Subgrade (for CBR values greater than 10%, subgrade protection not required)	3” AC 8” UTBC Type 1 Geogrid Properly-Prepared Subgrade (for CBR values greater than 6%, subgrade protection not required)

Minor Arterial Typical Section Options (Class III)	
5” AC 8” UTBC Properly-Prepared Subgrade (for CBR values greater than 10%, subgrade protection not required)	4” AC 8” UTBC Type 1 Geogrid Properly-Prepared Subgrade (for CBR values greater than 7%, subgrade protection not required)

Major & Principle Arterial Road Typical Section Options (Class IV)		
5” AC 6”UTBC 9” GB (Granular Borrow) (for CBR values greater than 9%, 9” GB is not required) Properly-Prepared Subgrade Protection Layer (for CBR values less than 30%, subgrade protection layer not required)	5” AC 8” UTBC Type 1 Geogrid Properly-Prepared Subgrade Protection Layer (for CBR values greater than 9%, subgrade protection layer not required)	4” AC 6” UTBC Type 1 Geogrid 9” GB (for CBR values greater than 7%, 9” GB not required) Properly-Prepared Subgrade (for CBR values greater than 19%, subgrade protection layer not required)

(a) Road classification and structural design must be submitted by a licensed and qualified engineer.
(b) Roadway structural design must take into consideration construction loads due to the construction of adjacent development phases.
(c) All traffic classifications require a 1/2" mix HMA design
(d) If collapsible soils are identified in the initial soils investigation or during construction, the subgrade soil shall be over-excavated and re-compacted a minimum of 18-inches or deeper unless otherwise directed by a licensed and qualified geotechnical engineer. This determination will be made on a case-by-case basis, depending on the facts and circumstances.

n. Data table (broken up by phase if applicable) with quantities of each storm drain and site/road improvement item totaled by type and size including pipes, structures, fittings, and materials.

2. Sewer systems designs shall include:

   a. Size of all manholes;
   b. Rim elevation of all manholes;
   c. Invert-in and invert-out elevations at all manholes;
   d. Sewer pipe size, type, and class;
   e. Location and complete details of sewage lift stations or other structures;
   f. Plan and profile views of all sanitary sewer lines with stationing of all structures and laterals;
   g. Profile views shall show existing and final surface profiles;
   h. The locations of any utility conflicts;
   i. Phase boundaries and identification of what will be completed with each phase; and
   j. Data table (broken up by phase if applicable) with quantities of each sewer improvement item totaled by type and size including pipes, structures, fittings, and materials.

3. Drinking and Secondary Water system designs shall include:

   a. Pipe line sizes, types and class;
   b. Locations and types of all valves and fire hydrants;
   c. Locations and types of all pipe line fittings including bends, tee's, crosses, and reducers;
   d. Air-vac and blow-off valve locations in both plan and profile views;
   e. Plan and profile views of all water lines with stationing of all structures and laterals;
   f. Profile views shall show existing and final surface profiles;
   g. The locations of any utility conflicts, and the location and design of all waterline looping;
   h. Phase boundaries and identification of what will be completed with each phase; and
      i. Data table (broken up by phase if applicable) with quantities of each drinking water and secondary improvement item totaled by type and size including pipes, structures, fittings, and materials.

4. Storm Water Pollution Prevention Plan for construction site activities:

   a. Use the Utah Division of Water Quality template.

5. Long-Term Storm Water Management Plan:

   a. Use the Utah Storm Water Advisory Committee template which has been modified for use by projects within the City of Saratoga Springs.

~~5.~~6. Construction Details sheets shall include all applicable City Standard or non-standard Details including:

   a. Typical Road Sections and pavement section designs;
   b. Sidewalks and Curb and Gutter;
   c. Sewer;
   d. Water;
   e. Storm Drain;

DIVISION 01

GENERAL REQUIREMENTS

7. Progress schedules.
8. Coordination drawings.
9. Closeout submittals.

PART 2 PRODUCTS - NOT USED

PART 3 EXECUTION

3.1 PRECONSTRUCTION MEETING

A. City Engineer will schedule a meeting after Notice of Award.

B. Attendance Required:

1. Owners/ Representative.
2. City Representative.
3. Contractor.
4. Excavator

C. Agenda:

1. SWPPP and NOI Permit
2. Long-Term Storm Water Management Plan.
3. Submission of executed bonds and insurance certificates, prior to meeting.
4. Traffic Control plans
5. Submission of list of Subcontractors, and progress schedule.
6. Designation of personnel representing the parties in Contract, Developer, Contractor, Owner, and the City Engineer.
7. Procedures and processing of field decisions, submittals, substitutions, applications for payments, proposal request, Change Orders, and Contract closeout procedures.
8. Review safety standards and procedures.
9. Scheduling.
10. Scheduling activities of a testing company and Geotechnical Engineer, if required.
11. Construction water availability and procedures.

D. Record minutes and distribute copies within two days after meeting to participants, with one copy to Contractor, City Engineer, Owner, participants, and those affected by decisions made.

3.2 PROGRESS MEETINGS AND INSPECTIONS

A. Schedule and administer meetings throughout progress of the Work at maximum monthly intervals.

B. Notify the City Inspector in writing at least 2 weeks in advance to request an inspection for the acceptance or rejection of project improvements. Allow at least 2 weeks to process bond reductions for accepted items upon completion of inspection. If site is impeded by winter weather conditions, City inspector shall reschedule inspection as soon as is practicable.

SECTION 02235

SANITARY SEWER SYSTEM

1.1 PART 1 GENERAL

1.2 SECTION INCLUDES

A. Sanitary sewer piping, fittings and accessories.

B. Casing pipes and accessories.

C. Connection of project pipe to existing manholes.

D. Sewer Service Connections.

1.3 RELATED SECTIONS

A. Section 02112 - Trenching for Pipe Work: Excavating of trenches.

B. Section 02116 - Fill and Backfill: Pipe bedding and trench backfilling.

C. Section 02340 - Manholes and Covers.

D. Section 03300 - Cast-In-Place Concrete.

1.4 REFERENCES

A. ASTM D 2321 - Standard Practice for Underground Installation of Thermoplastic Pipe for Sewers and Other Gravity-Flow Applications.

B. ASTM D 3034 - Standard Specification for Type PSM Poly Vinyl Chloride (PVC) Sewer Pipe and Fittings.

C. ASTM F 477 - Standard Specification for Elastomeric Seals (Gaskets) for Joining Plastic Pipe.

D. ASTM F 679 - Standard Specification for Poly Vinyl Chloride (PVC) Large-Diameter Gravity Sewer Pipe and Fittings; 18-inch through 24-inch smooth solid wall sewer pipe.

E. Use the latest issue of the above reference standards as of the date of the Project.

1.5 DEFINITIONS

A. Pipe Bedding: Fill placed within the pipe zone, which is under, beside and directly over pipe, prior to subsequent backfill operations; see standard trench detail drawing.

1.6 SUBMITTALS

A. See Section 01300 - Administrative Requirements, for submittal procedures.

B. Product Data: Provide data indicating pipe, pipe accessories, and fittings.

C. Manufacturer's Installation Instructions: Indicate special procedures required to install Products specified.

interference with flow of water caused by the operations of the Contractor.

J. Contractor shall secure required permission from the agency listed above before commencing with the installation of casing pipes and related work along and across the respective areas.

3.4 CONNECT PROJECT PIPE INTO EXISTING SEWER MANHOLE

A. See Sections 02115 and 02116 for structural excavation and fill and backfill.

B. Connection of project pipe into existing sewer manhole shall include:

1. All excavating required for the connection; and backfilling excavations after the connection is completed, and compacting backfill as required.
2. Removing existing and/or abandoned pipes where and if required.
3. Core-cutting hole through wall and base of existing manhole, where required, with appropriate size coring machine; and preparing hole for connection.
4. Installing new pipe in place and connecting to manhole wall with appropriate type flexible coupling, as recommended by the coupling manufacturer.
5. Reforming manhole floor and invert channel to provide smooth channel transitions to accommodate new connected pipes.
6. Sealing around new pipe with non shrink grout where it intersects manhole wall; make connection watertight.
7. Perform all other operations necessary to restore existing manhole to an acceptable condition to the City Inspector.

C. If existing manhole does not have steps, connection shall also include furnishing and installing new manhole steps. Steps shall be installed as described in Section 02340, Manholes.

D. Provide temporary facilities to divert existing sewer flows around work areas in a manner acceptable to the City Engineer.

3.5 SEWER SERVICE CONNECTIONS

A. Sewer service lines shall extend from a 4-inch or 6-inch wye branch placed in the sewer main, as indicated on the drawings.

1. Normally, a 22 1/2 degree or 45 degree bend, rotated so that proper alignment and grade is established, shall be installed in the main line wye branch.

2. In some instances, the bend may be omitted; and in some instances, two bends may be required.

~~2.~~3. Nose-on connections are not permitted.

B. All pipe and fittings shall be heavy wall PVC sewer pipe conforming to the specifications found elsewhere in this Section.

C. Installation:

1. Pipe and fittings for sewer service lines shall be installed as described herein.

2. 4-inch and 6-inch sewer laterals shall be installed at a minimum slope of 1/4-inch per foot, which is about a 2.0 percent grade.
3. Sewer service lines shall be installed at a uniform grade and alignment; and shall be free of low spots or adverse grades.

D. Cleaning and Testing.

1. Sewer service lines shall be cleaned, flushed and tested in accordance with applicable requirements of this Section. All testing documentation shall be furnished to the City prior to acceptance.
2. After flushing and testing have been completed, the end of the service line shall be plugged until the home or business is connected.

3.6 CONSTRUCTING COLLARS AROUND EXISTING MANHOLE COVERS

A. Construct collars around existing manhole covers after street pavement has been restored.

B. Collars shall be constructed according to City standards per City Standard Drawing SS-2.

3.7 FIELD QUALITY CONTROL

A. Clean and Flush new sewer pipe as follows.

1. Take every precaution to prevent dirt, grease, and all other foreign matter from entering each length of pipe before making connections in field.
2. After each section of piping is installed, it shall be thoroughly cleaned to remove rocks, dirt, and other foreign matter by washing, sweeping, scraping or other methods that will not harm lining of pipe.
3. For safety and to prevent rocks and other foreign matter from entering pipe, all open ends of pipe shall be plugged when workmen are not on the job or in the immediate area.
4. Flushing and testing shall be completed by the Contractor.
5. All temporary water connections for flushing and drainage shall be furnished, installed, and subsequently removed by the Contractor after completion of the operation.

B. Perform field inspection and testing in accordance with Section 01400 and 02112.

C. Pipe installation shall be inspected by the City Engineer or Inspector prior to backfilling of trench; backfilling will be done only after it is authorized by the City Engineer or City Inspector.

D. If tests indicate Work does not meet specified requirements, remove Work, replace and retest at no cost to City.

E. Test for Leakage: Test all pipe, fittings and other items for leakage, in presence of a City Inspector, after items have been cleaned. All joints, couplings, fittings shall be watertight.

1. Air Test: Low pressure air test may be performed. Section of pipe being tested shall be sealed; line under test shall be pressurized to approximately 3.5 psi; and pressure allowed to stabilize for a minimum of two minutes. During this period air shall be added if pressure drops below 3.5 psi. After this stabilization period, timing shall begin. The time of test, in minutes, shall be equal to the pipe diameter in inches. The maximum allowable pressure drop during specified time period shall be 1.0 psi.

F. Deflection Test, PVC Sewer Pipe: After PVC sewer pipe has been cleaned, perform deflection test on each section of pipe line between manholes. The maximum allowable pipe deflection, the reduction in vertical inside diameter, shall be 5 percent. Maximum allowable deflection shall be applied to the base inside diameters shown in Table 63, Base Inside Diameters For Deflection Measurements of ASTM D 3034 SDR35 PVC Sewer in the Uni-Bell "Handbook of PVC Pipe", to determine minimum permissible diameter, or other appropriate sources. Testing devices shall include deflectometer, calibrated television or photography, or properly sized mandrel or sewer ball.

G. Televise Sewer Lines. After pipe lines have been tested for leakage and deflection, the main sewer lines shall be televised, along with appropriate narrative, by company specializing in this type work. A digital copy of the video shall be provided to the City Engineer. Video shall be provided ~~CD~~ digitally and shall be in color by a camera capable of pan and tilt capabilities. Maximum speed shall be 20' per minute. Video shall be continuous with steady stream of water running in pipe.

3.8 PROTECTION

A. Protect pipe and bedding material from damage or displacement.

END OF SECTION

SECTION 02350

STORM WATER TREATMENT SYSTEM

PART 1 GENERAL

1.1 SECTION INCLUDES

A. Storm water treatment systems.

B. Reinforced concrete structures.

1.2 RELATED SECTIONS

A. Section 02115 - Structural Excavation: Excavating for structures and appurtenant items.

B. Section 02116 - Fill and Backfill: Bedding, backfilling and compacting.

C. Section 02335 - Storm Water System.

D. Section 03300 - Cast-in-Place Concrete: Concrete for structures and appurtenant items.

1.3 SUBMITTALS

A. See Section 01300 - Administrative Requirements, for submittal procedures.

B. Product Data: Provide product data on storm water treatment system and appurtenant items including removal curves and washout testing that validate the unit selection

C. Shop Drawings:

1. Provide dimensional shop drawings; prepared at a scale of not less than 3/16-inches per foot (1:75).
2. Shop drawings shall be annotated to indicate all materials to be used and all applicable standards for materials, required tests of materials, and design assumptions for structural analysis.
3. Submit hard or electronic copies of equipment shop drawings to the City Engineer for review and acceptance.

D. Manufacturer's Certificate: Certify that products meet or exceed specified requirements.

E. Project Record Documents: Record actual locations structures and appurtenant items. Identify and describe unexpected variations to subsoil conditions or discovery of uncharted utilities.

1.4 QUALITY CONTROL INSPECTION

A. The quality of materials, the process of manufacture, and the finished sections shall be subject to inspection by the City Engineer. Such inspection may be made at the place of manufacture, or on the work site after delivery, or at both places.

1. The sections shall be subject to rejection at any time if material conditions fail to meet any of the specification requirements, even though sample sections may have been accepted as satisfactory at the place of manufacture.

B. Treatment System Components and Design.

1. Storm water treatment system shall include a tangential inlet to induce a swirling flow pattern that will accumulate and store settable solids in a manner and a location that will prevent re- suspension of previously captured particulates. Swirl chamber diameter shall be sized for the anticipated storm water flows.
2. Storm water treatment system shall be of a hydraulic design that includes flow controls designed and certified by a professional engineer, using accepted principles of fluid mechanics, which raise the water surface inside the tank to a pre-determined level in order to prevent the re-entrainment of trapped floating contaminants.
3. Storm water treatment system shall have a design treatment capacity sized for the anticipated storm water flows; and shall not re-suspend trapped sediments or re-entrain floating contaminants at flow rates up to and including the design treatment capacity.
4. Storm water treatment system shall have usable sediment storage capacity of volume designed by the manufacturer for the anticipated storm water flows.
5. The system shall be designed such that the pump-out volume is less than one-half of the total system volume.
6. The system shall be designed to not allow surcharge of the upstream piping network during dry weather Conditions and shall have a sediment sum that is protected from high flows during peak flow events.
7. A water-lock feature shall be incorporated into the design of the storm water treatment system to prevent the introduction of trapped oil and floatable contaminants to the downstream piping during routine maintenance and to ensure that no oil escapes the system during the ensuing rain events.
8. Direct access shall be provided to the sediment and floatable contaminant storage chambers to facilitate maintenance. There shall be no appurtenances or restrictions within these chambers.
9. The manufacturer shall certify that storm water treatment system conforms to the performance requirements described herein for the anticipated storm water flows.

C. Manufacturer.

1. Only products that have been approved for pretreatment by the Washington Department of Ecology under general use level designation (GULD) or conditional use level designation (CULD) shall be allowed.~~Storm water treatment systems shall be of a type that has been installed and used successfully for a minimum of 3 years. The manufacturer of said systems shall have been regularly engaged in the engineering design and production of systems for physical treatment of storm water runoff during the aforementioned period.~~

2.2 SEPARATION TYPE STORM WATER TREATMENT SYSTEMS

A. Reinforced Concrete Structures.

1. Construct the reinforced concrete manholes for the treatment system as indicated on the drawings.
2. Manholes shall be sized by the manufacturer to conform to the performance requirements described herein.
3. Manholes shall be constructed as described in Section 02340.

4. Pipe openings shall be sized to accept pipes of the specified size(s) and material(s), and shall be sealed with a hydraulic cement conforming to ASTM C 595M or Link-Seal.

5. Manhole frames and covers shall be in accordance with Section 02340; with the words" Storm Water Treatment System" cast in covers.

B. Treatment System Components and Design.

1. The storm water treatment system shall include a primary manhole, separator unit, storage manhole, pipes, fittings, and appurtenant items.

2. The primary manhole will accumulate and store coarse settleable solids; and the storage manhole will accumulate and store fine settable solids, oils and floatable contaminates. Manholes shall be designed to prevent re-suspension of previously captured particulates; and shall be sized for the anticipated storm water flows.

3. The separation unit and piping shall be designed and certified by a professional engineer, to totally treat the anticipated storm water flows. No overflow of the system will be allowed.

C. Manufacturer.

1. Only products that have been approved for pretreatment by the Washington Department of Ecology under general use level designation (GULD) or conditional use level designation (CULD) shall be allowed.~~Storm water treatment systems shall be of a type that has been installed and used successfully for a minimum of 3 years. The manufacturer of said systems shall have been regularly engaged in the engineering design and production of systems for physical treatment of storm water runoff during the aforementioned period.~~

2.3 STORM WATER TREATMENT SYSTEM PERFORMANCE

A. Performance. Storm water treatment systems shall adhere to the following performance specifications at the anticipated design treatment capacities.

1. Treatment standard: 80% TSS based on a particle size with a max 110 µm average (D50) particle size at the water quality flow rate

2. Detained Water Quality Flow Rate: 100-yr peak flow through the orifice during the critical storm less than~~a~~ 24 hours in duration~~storm~~

3. Undetained Water Quality Flow Rate: 2 year peak flow through the system during the critical storm less than~~a~~ 24 hours in duration~~storm~~

4. Peak Flow (pass through) rate: 100-yr peak flow through the system during the critical storm less than~~a~~ 24 hours~~.~~ in duration~~Storm~~

B. The design engineer shall determine the following performance requirements:

1. Total treatment capacity.

2. Sediment storage capacity.

C. The design engineer shall submit calculations used to determine anticipated storm water flows.

~~D. The manufacturer shall design and size the treatment system to treat the total storm water flow through the treatment system to the following requirements:~~

~~1. Treatment system shall be capable of removing 80% of the net annual Total Suspended Solids (TSS) load based on a 110-micron particle size.~~

~~a. Annual TSS removal efficiency models shall be based on documented removal efficiency performance from full scale laboratory tests.~~

~~b.~~a. ~~Annual TSS removal efficiency models shall only be considered valid if they are corroborated by independent third party field testing. Said field testing shall include influent and effluent composite samples from a minimum of ten storms at one location.~~

PART 3 EXECUTION

3.1 EXAMINATION

A. Verify that the storm drain pipe line sizes, locations, and invert elevations are as indicated on the drawings.

3.2 PREPARATION

A. Prepare ends of storm drain pipe for connections to treatment system structures.

3.3 EXCAVATION

A. See Sections 02115 and 02116 for additional requirements.

B. Excavate to the limits as described in Section 02116.

C. After the concrete structures have been completed, backfill around and over the structure, tamp in place and compact. See Section 02116 for requirements.

3.4 CONSTRUCTION - CONCRETE STRUCTURE

A. Furnish all labor, materials, equipment and appurtenant items required to construct the reinforced concrete structure for the storm water treatment system, in accordance with the drawings and the specifications.

B. Furnish, place and compact granular base of the thickness indicated; conforming to Section 02116.

C. Construct the reinforced cast-in-place concrete structure as indicated on the drawings.

1. Precast concrete vaults may be used with the following requirements.
   a. Concrete shall conform to the requirements of Section 03300.
   b. Precast concrete vaults shall be designed for HS20-44 loading as determined by a Licensed Professional Engineer.
   c. Precast sections shall have tongue and groove joints with a butyl mastic sealant conforming to ASTM C990
   d. Vaults shall conform to the dimensions indicated for the cast-in-place vault, and to the appropriate required described herein.
   e. Precast sections shall be set in a manner that will result in a watertight joint. In all instances, installation of Stormwater Treatment Systems shall conform to ASTM specification C 891 "Standard Practice for Installation of Underground Precast Utility Structures".
   f. Holes made in the concrete sections for handling or other purposes shall be

SECTION 02410

WATER DISTRIBUTION SYSTEM

PART 1 GENERAL

1.1 SECTION INCLUDES

A. Pipe and fittings for project water lines, to include domestic water lines, fire water lines, and drinking water lines.

B. Valves, Fire hydrants, and appurtenant items.

1.2 RELATED SECTIONS

A. Section 02112 - Trenching for Pipe Work: Excavating, bedding, backfilling and compacting.

B. Section 02115 - Excavation: Excavating for structures and appurtenant items.

C. Section 02116 - Fill and Backfill: Bedding and backfilling.

D. Section 02415 - Disinfection of Water Distribution Systems: Disinfection of site service utility water piping.

E. Section 03300 - Cast-in-Place Concrete: Concrete for thrust restraints.

1.3 REFERENCES

A. ASME B16.18 - Cast Copper Alloy Solder Joint Pressure Fittings; The American Society of Mechanical Engineers.

B. ASME B16.22 - Wrought Copper and Copper Alloy Solder-Joint Pressure Fittings; The American Society of Mechanical Engineers.

C. ASTM B 88 - Standard Specification for Seamless Copper Water Tube.

D. ASTM D 3139 - Standard Specification for Joints for Plastic Pressure Pipes using Flexible Elastomeric Seals.

E. AWS A5.8 - Specification for Filler Metals for Brazing and Braze Welding; American Welding Society.

F. AWWA C104/A21.4 - Cement-Mortar Lining for Ductile-Iron Pipe and Fittings for Water; American Water Works Association (ANSI/AWWA C104/A21.4).

G. AWWA C105/A21.5 - Polyethylene Encasement for Ductile-Iron Pipe Systems; American Water Works Association (ANSI/AWWA C105/A21.5).

H. AWWA C111/A21.11 - Rubber-Gasket Joints for Ductile-Iron Pressure Pipe and Fittings; American Water Works Association (ANSI/AWWA C111/A21.11).

I. AWWA C151/A21.51 - Ductile-Iron Pipe, Centrifugally Cast, for Water; American Water Works Association; (ANSI/AWWA C151/A21.51).

J. AWWA C500 - Metal-Seated Gate Valves for Water Supply Service; American Water Works

1. Brass or Bronze body, non-rising stem, inside screw, single wedge or disc, IPS ends, and handwheel.
2. Product: Powell U.S. Bronze Gate Valves.
3. Substitutions: See Section 01600 - Product Requirements.

C. Gate Valves 3 Inches and Over:

1. AWWA C500, iron body, bronze trim, non-rising stem with square nut, single wedge, mechanical joint or flanged ends as indicated, and cast iron valve box.
2. AWWA C509, iron body, bronze trim, non-rising stem with square nut, single wedge, resilient seat, mechanical joint or flanged ends as indicated, and cast iron valve box.
3. AWWA C515, ductile iron, bronze trim, non-rising stem with square operating nut, single ductile iron wedge, mechanical joint or flanged ends, as indicated, and cast iron valve box.
4. Product: Clow, Mueller, or American Flow Control 2500.

D. Butterfly Valves from 2 Inches to 24 Inches:

1. AWWA C504, iron body, bronze disc, resilient replacement seat, mechanical joint or flanged ends as indicated, manual worm gear operator, and cast iron valve box where required.
2. Underground manual operators shall be totally enclosed, factory grease packed and sealed, bronze worm gear operators with self-locking gearing; stops shall be provided to prevent over travel of valve disc.
3. Valve operator shall be geared to close valves slowly. Number of turns to close valve from full open position shall be: 32 turns for 10-inch and smaller valves, 52 turns for 12-inch thru 16-inch valves, and 76 turns for 18-inch thru 24-inch valves. Closing times for larger valves must first be accepted by the City Engineer.
4. Product: Mueller "Lineseal III" Butterfly Valve with appropriate type Pacific States Cast Iron Valve Box.

E. Corporation Stops: Shall be type for connecting to copper or polyethylene pipe; Mueller No. H- 15000.

F. Blow-Off Hydrants: shall be Non-Freeze Blow-Off Assembly.

2.4 HYDRANTS

A. Hydrants: AWWA C502, UL 246, dry barrel type.

1. Jackets: AWWA C105 polyethylene jacket with polyethylene tape.
2. Inside dimension: 7 inches minimum, with minimum 5 inches diameter valve seat opening.
3. Minimum net water area of barrel not less than 190 percent of valve opening.
4. 6 inch flanged inlet connection with accessories, gland bolts, and gaskets.
5. Product: Mueller "Super Centurion 250", Waterous “Pacer WB 67-250”,or Clow “Medallion” Fire Hydrants. ~~or equal.~~

B. Hydrant Extensions: Fabricate with rod and coupling to increase barrel length, 1 extension

SECTION 02415

DISINFECTION OF WATER DISTRIBUTION SYSTEM

PART 1 GENERAL

1.1 SECTION INCLUDES

A. Disinfection of project pipe lines specified in Section 02410.

B. Disinfection of site domestic water lines, site fire water lines, and hydrant supply lines and water service lines specified in Section 02410.

C. Testing and reporting results.

1.2 RELATED SECTIONS

A. Section 02410 - Water Distribution System.

1.3 REFERENCES

A. AWWA B300 - Hypochlorites; American Water Works Association; (ANSI/AWWA B300).

B. AWWA B301 - Liquid Chlorine; American Water Works Association; (ANSI/AWWA B301).

C. AWWA B302 - Ammonium Sulfate; American Water Works Association; (ANSI/AWWA B302).

D. AWWA B303 - Sodium Chlorite; American Water Works Association; (ANSI/AWWA B303).

E. AWWA C651 - Disinfecting Water Mains; American Water Works Association; (ANSI/AWWA C651).

F. Use the latest issue of the above reference standards as of the date of the Project.

1.4 SUBMITTALS

A. See Section 01300 - Administrative Requirements, for submittal procedures.

B. Test Reports: Indicate results comparative to specified requirements.

C. Certificate: Certify that cleanliness of water distribution system meets or exceeds specified requirements.

D. Disinfection report:

1. Type and form of disinfectant used.
2. Date and time of disinfectant injection start and date and time of disinfectant injection completion.
3. Test locations.
4. Initial and 24 hour disinfectant residuals (quantity in treated water) in ppm for each outlet tested.
5. Date and time of flushing start and completion.

E. Replace permanent system devices removed for disinfection.

F. Perform bacteria test at location accepted by City Inspector. After receiving clean bacteria test results, pressure test system to 200 psi for 2 hours. Repair leaks and re-test.

~~F.~~G. Perform a second bacteria test upon completion and acceptance of pressure test.

3.3 FIELD QUALITY CONTROL

A. Perform field inspection and testing in accordance with Section 01400.

B. Test samples in accordance with AWWA C651.

END OF SECTION

5. Service Clamps: shall be bronze, double-strap type; Mueller No. H-16134, for up to 2 inch service lines.

6. Other Items. Other miscellaneous materials shall be as indicated on the drawings and as required to complete the station.

D. Hangers and Supports. Provide all hangers, supports, clamps, guides, sleeves, inserts, anchors and other such devices required for hanging or supporting pipe, preserving alignment, prevention of movement, passage of pipe through walls and floors, or securing pipe in any manner. The required number, location and detail of such items may or may not be indicated on the drawings; but, in any case, such work shall be provided as work incidental to furnishing and installing any type of pipe, fittings and appurtenances, and no extra payment will be made for this work.

a. Piping shall be supported or suspended in such manner as to prevent sagging or over stressing of pipe, valves, fittings or connections; and so that no pipe, fittings, valves or other items transfer load or strain to equipment of any kind.

2.4 BEDDING AND BACKFILL MATERIALS

A. Bedding: As specified in Sections 02115 and 02116.

B. Backfill: As specified in Sections 02115 and 02116.

2.5 ACCESSORIES

A. Concrete for Thrust Restraints: Concrete type specified in Section 03300.

PART 3 EXECUTIONS

3.1 EXAMINATION

A. Verify that water main size, location, and invert are as indicated.

3.2 PREPARATION

A. Cut pipe ends square, ream pipe ends to full pipe diameter, remove burrs.

B. Remove scale and dirt on inside and outside before assembly.

C. Prepare pipe connections to equipment with flanges or mechanical joints.

3.3 EXCAVATING

A. See Section 02112 and Sections 02115 and 02116 for additional requirements.

B. Hand trim excavation for accurate placement of station to elevations indicated.

C. Backfill around sides and to top of valve vault with backfill material, tamp in place and compact.

3.4 CONSTRUCTION - VALVE VAULT

A. Construct the vault for the air-vacuum valve station at the location indicated on the drawings; in accordance with the details shown on the drawings and as specified herein.

SECTION 02580

SECONDARY WATER SYSTEM

PART 1 GENERAL

1.1 SECTION INCLUDES

A. Pipe and fittings for project water lines, to include secondary water lines.

B. Valves and appurtenant items.

C. Water Service Connections.

1.2 RELATED SECTIONS

A. Section 02112 - Trenching for Pipe Work: Excavating, bedding, backfilling and compacting.

B. Section 02115 - Excavation: Excavating for structures and appurtenant items.

C. Section 02116 - Fill and Backfill: Bedding and backfilling.

D. Section 02340 - Manholes and Covers.

E. Section 03300 - Cast-in-Place Concrete: Concrete for thrust restraints.

1.3 REFERENCES

A. ASTM D 3139 - Standard Specification for Joints for Plastic Pressure Pipes using Flexible Elastomeric Seals.

B. ASTM D 3035 - Standard Specification for Polyethylene (PE) Plastic Pipe (DR-PR) Based on Controlled Outside Diameter.

C. AWWA C104/A21.4 - Cement-Mortar Lining for Ductile-Iron Pipe and Fittings for Water; American Water Works Association; (ANSI/AWWA C104/A21.4).

D. AWWA C105/A21.5 - Polyethylene Encasement for Ductile-Iron Pipe Systems; American Water Works Association; (ANSI/AWWA C105/A21.5).

E. AWWA C111/A21.11 - Rubber-Gasket Joints for Ductile-Iron Pressure Pipe and Fittings; American Water Works Association; (ANSI/AWWA C111/A21.11).

F. AWWA C151/A21.51 - Ductile-Iron Pipe, Centrifugally Cast, for Water; American Water Works Association; (ANSI/AWWA C151/A21.51).

G. AWWA C500 - Metal-Seated Gate Valves for Water Supply Service; American Water Works Association.

H. AWWA C504 - Rubber Seated Butterfly Valves; American Water Works Association.

I. AWWA C508 - Swing-Check Valves for Waterworks Service, 2 In. (50 mm) Through 24 In. (600 mm) NPS; American Water Works Association; (ANSI/AWWA C508/C508a).

J. AWWA C509 - Resilient-Seated Gate Valves for Water Supply Service; American Water

1. AWWA C500, iron body, bronze trim, non-rising stem with square nut, single wedge, mechanical joint or flanged ends as indicated, and cast iron valve box.
2. AWWA C509, iron body, bronze trim, non-rising stem with square nut, single wedge, resilient seat, mechanical joint or flanged ends as indicated, and cast iron valve box.
3. AWWA C515, ductile iron, bronze trim, non-rising stem with square operating nut, single ductile iron wedge, mechanical joint or flanged ends as indicated, and cast iron valve box.
4. Product: Mueller Gate Valves or Resilient Seat Gate Valves, or American Flow Control Series 2500 Resilient Seat Gate Valves; with appropriate type Pacific States Cast Iron Valve Box.

D. Ball Valves Up To 2 Inches:

1. Brass body, Teflon coated brass ball, rubber seats and stem seals, Tee stem pre-drilled for control rod, compression inlet end, compression outlet, with control rod, valve key, and extension box.

E. Swing Check Valves From 2 Inches to 24 Inches:

1. AWWA C508, iron body, bronze trim, 45 degree swing disc, renewable disc and seat, flanged ends.
2. Product: Mueller Swing-Type Check Valve.

F. Butterfly Valves ~~From 2 Inches to 24 Inches~~12" and larger:

1. AWWA C504, iron body, bronze disc, resilient replacement seat, mechanical joint or flanged ends as indicated, manual worm gear operator, and cast iron valve box where required.
2. Underground manual operators shall be totally enclosed, factory grease packed and sealed, bronze worm gear operators with self-locking gearing; stops shall be provided to prevent over travel of valve disc.
3. Valve operator shall be geared to close valves slowly. Number of turns to close valve from full open position shall be: 32 turns for 10-inch and smaller valves, 52 turns for 12-inch thru 16-inch valves, and 76 turns for 18-inch thru 24-inch valves. Closing times for larger valves must first be accepted by the City Engineer.
4. Product: Mueller "Lineseal III" Butterfly Valve with appropriate type Pacific States Cast Iron Valve Box.

G. Corporation Stops: shall be type for connecting to copper or polyethylene pipe; Mueller No. H-15000, for up to 2-inch service line.

H. Air Release Valves: shall be combination air release valves; APCO Combination Air Release Valves, of size indicated on the drawings.

I. Blow-Off Hydrant: shall be Non-Freezing Blow-Off Assembly.

2.4 SECONDARY WATER CONNECTIONS

A. Secondary water connections shall be constructed as indicated on the drawings.

B. Connections shall include meter boxes, meters, valve boxes, stop & water valves, and all appurtenant items, as indicated on the drawings.

SECTION 02586

BACKFLOW PREVENTER STATION

PART 1 GENERAL

1.1 SECTION INCLUDES

A. Backflow preventer stations, complete, including:

1. Backflow preventer valves.
2. Pipe, fittings, valves, and appurtenant items.

B. Station testing.

1.2 RELATED SECTIONS

A. Section 02112 - Trenching for Pipe Work: Excavating, pipe bedding, backfilling and compacting.

B. Section 02115 - Excavation: Excavating for structures and appurtenant items.

C. Section 02116 - Fill and Backfill: Pipe bedding and excavation backfilling.

D. Section 03300 - Cast-in-Place Concrete: Concrete for structures and thrust blocks.

1.3 REFERENCES

A. ASTM A 53 - Standard Specification for Pipe, Steel, Black and Hot-Dipped, Zinc-Coated, Welded and Seamless.

B. ASTM A 234 - Standard Specification for Piping Fittings of Wrought Carbon Steel and Alloy Steel for Moderate and High Temperature Service.

C. AWWA C104/A21.4 - Cement-Mortar Lining for Ductile-Iron Pipe and Fittings for Water; American Water Works Association; (ANSI/AWWA C104/A21.4).

D. AWWA C105/A21.5 - Polyethylene Encasement for Ductile-Iron Pipe Systems; American Water Works Association; (ANSI/AWWA C105/A21.5).

E. AWWA C111/A21.11 - Rubber-Gasket Joints for Ductile-Iron Pressure Pipe and Fittings; American Water Works Association; (ANSI/AWWA C111/A21.11).

F. AWWA C151/A21.51 - Ductile-Iron Pipe, Centrifugally Cast, for Water; American Water Works Association; (ANSI/AWWA C151/A21.51).

G. AWWA C500 - Metal-Seated Gate Valves for Water Supply Service; American Water Works Association.

H. AWWA C504 - Rubber Seated Butterfly Valves; American Water Works Association.

I. AWWA C508 - Swing-Check Valves for Waterworks Service, 2 In. (50 mm) Through 24 In. (600 mm) NPS; American Water Works Association; (ANSI/AWWA C508/C508a).

1. AWWA C508, iron body, bronze trim, 45 degree swing disc, renewable disc and seat, flanged ends.
2. Product: Mueller Swing-Type Check Valve.

F. Butterfly Valves From 2 Inches to 24 Inches:

1. AWWA C504, iron body, bronze disc, resilient replacement seat, mechanical joint or flanged ends as indicated, manual worm gear operator, and cast iron valve box where required.
2. Underground manual operators shall be totally enclosed, factory grease packed and sealed, bronze worm gear operators with self-locking gearing; stops shall be provided to prevent over travel of valve disc.
3. Valve operator shall be geared to close valves slowly. Number of turns to close valve from full open position shall be: 32 turns for 10-inch and smaller valves, 52 turns for 12-inch thru 16-inch valves, and 76 turns for 18-inch thru 24-inch valves. Closing times for larger valves must first be accepted by the City Engineer.
4. Product: Mueller "Lineseal III" Butterfly Valve with appropriate type Pacific States Cast Iron Valve Box.

G. Corporation Stops: shall be type for connecting to copper or polyethylene pipe; Mueller No. H- 15000, for up to 2-inch service line.

H. Air Release Valves: shall be combination air release valves; APCO Combination Air Release Valves, of size indicated on the drawings.

2.3 BACKFLOW PREVENTER

A. The backflow preventer shall be a reduced pressure type valve.

1. The backflow preventer shall be bronze for 6-inch and smaller valves, and epoxy coated ductile iron for 8-inch and larger valves.
2. The backflow preventer shall consist of two independently acting, spring-loaded check valves with a differential pressure relief valve located between the check valves.
3. The backflow preventer shall include inlet and outlet shutoff valves; and four test cocks, three on the backflow preventer valve bodies and one on the inlet shutoff valve.

B. The backflow preventers shall be of the appropriate size and type, as manufactured by Febco or ~~Conbraco~~Watts.

2.4 MISCELLANEOUS METAL WORK

A. Miscellaneous metal work shall be provided as indicated on the drawings, as required to complete the Station.

2.5 PAINTING

A. All exposed pipe, valves, fittings, and metal work for the station shall be painted.

1. Painting shall consist of either:
   a. 4 coats of alkyd paint, Painting System II (Steel Structural Painting Council - Specification No. 2);

SECTION 02724

AUTOMATIC SPRINKLING SYSTEM

PART 1 GENERAL

1.1 SECTION INCLUDES

A. Complete automatic sprinkling system, including:

1. Pipe and fittings.
2. Valves, valve boxes, and appurtenant items.
3. Automatic controller, control valves, valve boxes, wires and appurtenant items.
4. Sprinkler heads and appurtenant items.
5. Connections to water main lines.

B. System design and testing.

1.2 RELATED SECTIONS

A. Section 02112 - Trenching for Pipe Work: Excavating, pipe bedding, backfilling and compacting.

B. Section 02115 - Excavation: Excavating for structures and appurtenant items.

C. Section 02116 - Fill and Backfill: Pipe bedding and excavation backfilling.

D. Section 02586 - Backflow Preventer Station.

E. Section 03300 - Cast-in-Place Concrete: Concrete for structures and thrust blocks.

1.3 REFERENCES

A. ASTM A 53 - Standard Specification for Pipe, Steel, Black and Hot-Dipped, Zinc-Coated, Welded and Seamless.

B. ASTM A 234 - Standard Specification for Piping Fittings of Wrought Carbon Steel and Alloy Steel for Moderate and High Temperature Service.

C. ASTM D 1785 - Standard Specification for Poly Vinyl Chloride (PVC) Plastic Pipe, Schedules 40, 80, and 120.

D. ASTM D 2239 - Standard Specification for Polyethylene (PE) Plastic Pipe (SIDR-PR) Based on Controlled Inside Diameter.

E. ASTM D 2241 - Standard Specification for Poly Vinyl Chloride (PVC) Pressure-Rated Pipe (SDR Series).

F. ASTM D 2447 - Standard Specification for Polyethylene (PE) Plastic Pipe, Schedules 40 and 80, Based on Outside Diameter.

G. ASTM D 2466 - Standard Specification for Poly Vinyl Chloride (PVC) Plastic Pipe Fittings, Schedules 40.

1.4 SUBMITTALS

A. See Section 01300 - Administrative Requirements, for submittal procedures.

B. Product Data: Provide data on pipe materials, pipe fittings, valves, controllers, sprinkler heads, and accessories.

C. Manufacturer's Certificate: Certify that products meet or exceed specified requirements.

D. Project Record Documents: Record actual locations of pipe lines, valves, controllers, sprinkler heads, connections, thrust restraints, and invert elevations. Identify and describe unexpected variations to subsoil conditions or discovery of uncharted utilities.

1.5 SYSTEM DESIGN

A. The sprinkling system shall be designed to provide adequate coverage to all areas to be watered.

B. Project drawings of the system shall be submitted to the City Engineer, showing design and general layout of pipe distribution system and sprinkler heads required to provide complete coverage and uniform distribution.

1. Drawings shall indicate pipe sizes, control valves, quick-coupling valves, automatic controller, control wiring, electrical service line, connections to water mains, backflow preventers, filters, and all appurtenant items.
2. Pipe system for spray heads shall have minimum pipe size of 3/4-inch; rotor pop-up sprinklers shall have minimum pipe size of 3/4-inch; and impact rotor pop-up or rotors above I-40 shall have minimum pipe size of 1-inch.
3. Quick-coupling valves shall be placed in the system where indicated on the drawings.
4. Drawings shall show system design pressures and PVC pipe classifications (either Schedule 40 or Schedule 80). A pipe size over 4” shall utilize gasketed joints.

C. Design a pipe distribution system to provide sufficient water to each of the heads. Spray Heads and Rotator Heads shall be on separate zones.

D. The Contractor may modify the layout of heads to better fit project conditions with notification and City approval; providing that complete coverage and uniform distribution is maintained.

1.6 QUALITY ASSURANCE

A. Perform Work in accordance with City's requirements as described herein.

B. A third party audit by a certified irrigation auditor verifying the distribution uniformity (DU) of the system is 70% for the rotors and 50% for spray heads. Testing results to be submitted prior to start of warranty period for new development in accordance with the City’s land development code.

1.7 DELIVERY, STORAGE, AND HANDLING

A. Deliver and store valves, controllers, heads, and appurtenant items in shipping containers with labeling in place.

2.3 SPRINKLING SYSTEM DISTRIBUTION AND LATERAL PIPE

A. PVC Pipe: ASTM D 1785, Schedule 40 or 80, as required.

1. Fittings: ASTM D 2466, Schedule 40 or 80, as required.
2. Joints: Cemented with Primer and solvent weld, using I.P.S. Brand, purple primer and grey solvent weld or approved equal. Red Hot Blue not permitted.
3. Schedule 80 pipe shall be used between stop & waste valves and master valves; and Schedule 40 pipe shall be used downstream from master valves.

B. Polyethylene Pipe: ASTM D 3035, for 160 psi pressure rating:

1. Fittings: AWWA C901, molded or fabricated.
2. Joints: Compression.

C. The minimum pipe size for distribution and lateral pipes to be 3/4-inch.

2.4 VALVES

A. Valves: Manufacturer's name and pressure rating marked on valve body.

B. Gate Valves Up To 3 Inches:

1. Brass or Bronze body, non-rising stem, inside screw, single wedge or disc, IPS ends, and handwheel.
2. Product: Powell U.S. Bronze Gate Valves.
3. Substitutions: See Section 01600 - Product Requirements.

C. Gate Valves 3 Inches and Over:

1. AWWA C500, iron body, bronze trim, non-rising stem with square nut, single wedge, mechanical joint or flanged ends as indicated, and cast iron valve box.
2. AWWA C509, iron body, bronze trim, non-rising stem with square nut, single wedge, resilient seat, mechanical joint or flanged ends as indicated, and cast iron valve box.
3. AWWA C515, ductile iron, bronze trim, non-rising stem with square operating nut, single ductile iron wedge, mechanical joint or flanged ends as indicated, and cast iron valve box.
4. Product: Mueller Gate Valves or Resilient Seat Gate Valves, or American Flow Control Series 2500 Resilient Seat Gate Valves; with appropriate type Pacific States Cast Iron Valve Box.

D. Ball Valves Up To 2 Inches:

1. Brass body, teflon coated brass ball, rubber seats and stem seals, Tee stem pre-drilled for control rod, compression inlet end, compression outlet, with control rod, valve key, and extension box.
2. Treat the Ball Valve and Handle to prevent moisture from metal causing corrosion.

E. Swing Check Valves from 2 Inches to 24 Inches:

1. AWWA C508, iron body, bronze trim, 45 degree swing disc, renewable disc and seat, flanged ends.
2. Product: Mueller Swing-Type Check Valve.

F. Butterfly Valves from 2 Inches to 24 Inches:

1. AWWA C504, iron body, bronze disc, resilient replacement seat, mechanical joint or flanged ends as indicated, manual worm gear operator, and cast iron valve box where required.
2. Underground manual operators shall be totally enclosed, factory grease packed and sealed, bronze worm gear operators with self-locking gearing; stops shall be provided to prevent over travel of valve disc.
3. Valve operator shall be geared to close valves slowly. Number of turns to close valve from full open position shall be: 32 turns for 10-inch and smaller valves, 52 turns for 12-inch thru 16-inch valves, and 76 turns for 18-inch thru 24-inch valves. Closing times for larger valves must first be accepted by the City Engineer.
4. Product: Mueller "Lineseal III" Butterfly Valve with appropriate type Pacific States Cast Iron Valve Box.

G. Corporation Stops: shall be type for connecting to copper or polyethylene pipe; Mueller No. H- 15000 for up to 2-inch service line.

H. Air Release Valves: shall be combination air release valves; APCO Combination Air Release Valves, or of size indicated on the drawings.

2.5 SPRINKLER HEADS

A. Part Circle Rotor Pop-Up Sprinklers.

1. Part circle rotor pop-up sprinklers shall be a single nozzle gear drive type, capable of covering the design radius at the site pressure with a discharge rate as recommended by the manufacturer; and shall have an infinitely adjustable arc of coverage from 40° to 360°. Spacing design shall be based on a 10-20% reduction of manufacturer recommendation.
2. Sprinkler case shall be constructed of rugged ABS plastic. The internal assembly shall include water-lubricated gear drive, pressure-activated wiper seal, SAM check device and heavy duty screen. The rotation of the sprinkler shall be accomplished by a gear drive.
3. The sprinkler nozzle shall have an outlet trajectory of 25° from the horizontal, with adjustment screw.
4. The sprinkler shall have a heavy-duty stainless steel retract spring to ensure positive pop-down. Pop-up height shall be not less than 6 inches; and the inlet shall be one-inch (FNPT).
5. The sprinkler shall be constructed so that all internal parts, including inlet screen, are accessible through the top of the sprinkler case without disturbing the soil around the case. The sprinkler shall have a rubber cover and vandal resistant cover screws.
6. Sprinklers shall be Part Circle Rotor Pop-up Sprinklers, of the appropriate size and type, as manufactured by Rain Bird Sprinkling Mfg. Corporation, Hunter Industries.

B. Full Circle Rotor Pop-Up Sprinklers.

1. Full circle rotor pop-up sprinklers shall be a single nozzle gear drive type, except for Hunter I-40 Opposing Nozzles, capable of covering the design radius at the site pressure with a discharge rate as recommended by the manufacturer.
2. Full circle sprinklers shall have the same construction as the part circle sprinklers described above.
3. Sprinklers shall be Full Circle Rotor Pop-up Sprinklers, of the appropriate size and type, as manufactured by Rain Bird Sprinkling Mfg. Corporation or Hunter Industries.

C. Full/Part Circle Rotor Pop-Up Sprinklers.

1. Rotor pop-up sprinklers shall have full or part circle capabilities in one unit; and shall be a single nozzle, water lubricated, turbine drive type with internal impact speed reduction, capable of covering the design radius at the site pressure with a discharge rate as recommended by the manufacturer.
2. Part circle sprinkler shall have an infinitely adjustable arc of coverage from 25° to 350°. The sprinkler shall not reverse direction during continuous operation in the full circle mode. Arc adjustment shall not require any tools.
3. The sprinkler case shall be constructed of rugged ABS plastic. The sprinkler shall include a stainless steel locking set-screw at cap threads to provide vandal resistance and a "Seal-A-Matic" (SAM) device built onto the inlet screen shall hold back 8 feet of elevation change to prevent puddling. The sprinkler shall have a non-strippable drive mechanism and shall permit manual rotation of the pop-up stem; and shall have a pressure-activated, multi-function, soft elastomer wiper seal that positively seals against the nozzle flange to keep debris out of the rotor and to clean debris from the pop-up stem as it retracts. The sprinkler range nozzle shall have an outlet trajectory of 23° from the horizontal. The sprinkler shall have a screen attached to the drive housing to filter inlet water and prevent the nozzle from clogging.
4. Sprinklers shall have a heavy-duty stainless steel retract spring to ensure positive pop-down. Pop- up height shall be not less than 5 5/8-inch; and the bottom inlet shall be 3/4-inch (FNPT).
5. Sprinklers shall be constructed so that all internal parts, including inlet screen, are accessible through the top of the sprinkler case without disturbing the soil around the case. The sprinkler shall have a rubber cover and vandal resistant cover screws.
6. Sprinklers shall be Full/Part Circle Pop-up Rotor Sprinklers, of the appropriate size and type, as manufactured by Rain Bird Sprinkling Mfg. Corporation, Hunter Industries.

D. Sprinkler Types and Spacing.

1. Large Area Rotors: Hunter I-40 at ~~50~~ 45 foot maximum spacing.
2. Medium Area Rotors: Hunter I-20 at ~~35~~ 30 foot maximum spacing.
3. Spray Heads: Rainbird # 1806 for turf areas; # 1812 for shrub beds.
   a. East to west park strips: provide 120 percent coverage; 12 foot spacing typical, or 15' Nozzels.
   b. North to south park strips: provide 100 percent coverage; 15 foot spacing typical.
   c. Built in check valves required if elevation changes from one head to next head.
   d. No Adjustable Arc Nozzles, Fixed Arc Nozzles only.
   e. No MP Rotator Nozzles.
   ~~e.~~ f. Bottom inlet only

4. Drip Systems: Hunter PCN Nozzles, series bubbler nozzles placed adjacent to plants higher in grade to allow flow to root zones of the plant.
    a. Compatible with Pro Spray bodies or 1800 heads.
    b. No fixed risers for bubblers.
    c. Pop-Ups/spray head bodies with PCN bubbler nozzles.~~s with spray heads~~
5. Type of landscape areas will determine flow requirements.
    a. P.R.V., if needed, use an individual pressure regulating device, such as an accuset.

2.6 ELECTRIC CONTROL VALVES

A. Electric remote control valves shall be normally closed 24 VAC, 60 cycle, solenoid actuated globe pattern design capable of having a flow rate as required with a pressure loss not to exceed 1.5 psi. The valve pressure rating shall not be less than 200 psi.

B. Valve body and bonnet shall be constructed of heavy-duty glass-filled UV resistant nylon and have stainless steel studs and flange nuts; diaphragm shall be of nylon reinforced nitrile rubber.

C. Valve shall have both internal and external manual open/close control, for manually opening and closing the valve without electrically energizing the solenoid. The valve's internal bleed shall prevent flooding of the valve box.

D. Valves shall house a fully-encapsulated, one-piece solenoid. The solenoid shall have a captured plunger with a removable retainer for easy servicing, and a leverage handle for easy turning. The 24 VAC, 60 Hz solenoid shall open with 19.6 VAC minimum at 200 psi. At 24 VAC, average inrush current shall not exceed 0.41 amps.

E. Valves shall have a brass flow control stem for accurate manual regulation and/or shut off of outlet flow. The valve must open or close in less than one minute at 200 psi, and less than 30 seconds at 20 psi.

F. Valves shall have a self-cleaning stainless steel screen designed for use in dirty water applications.

G. Valve construction shall be such as to provide for all internal parts to be removable from the top of the valve without disturbing the valve installation.

H. Control valves shall be Electric Remote Control Plastic Scrubber Valves, of the appropriate size and type, as manufactured by Rain Bird Sprinkling Mfg. Corporation, Hunter ICV Control Valves with Filter Sentry.

2.7 QUICK-COUPLING VALVES

A. Quick-coupling valves shall be a 1" minimum one piece type; constructed on heavy cast brass. The cover shall be a durable, self-closing, and locking rubber cover. The valves shall be opened and closed by a brass key of the same manufacturer, having an appropriate outlet. The valve throat shall have a keyway with detent positions for regulating flow.

B. Quick-coupling valves shall be Model 3-RC, as manufactured by Rain Bird Sprinkling Mfg. Corp

2.8 CONTROL WIRE

A. Control wire shall be UF No. 14 gauge or larger; conforming to the requirement of Section 05123. For two wire systems, shall use Maxi-cable 14-2 paired 14 awg double jacketed wire. Control wire to be placed in ¾-1" conduit with sweep elbows into each valve box. For multiple wire pats, each path shall~~to~~ be colored differently. Polypipe is acceptable for two wire conduit.

2.9 SPRINKLING SYSTEM CONTROLLER

A. Sprinkling system controller shall be capable of fully automatic or manual operation of the system.

B. The controller shall operate on a 17 VAC, plus or minus 10%, power input; and be capable of operating four 24 VAC electric remote control valves per station. The controller shall have a reset circuit breaker to protect it from power overload.

C. The controller shall be constructed such that all internal parts are accessible through the controller door without disturbing the cabinet installation.

D. The controller shall be a WeatherTRAK ETPro3-~~0~~CH2o-~~0~~2W two-wire controller, of the appropriate size and type, and CWM enclosure (cold rolled steel coated wall mount). Other enclosure options include: SWM (Stainless Wall Mount), SPT (Heavy Duty Stainless pedestal), CWM-CPED (Light Duty Coated Pedestal).

~~D.~~E. The decoders shall be WeatherTRAK H2O-2, installed with each solenoid valve.

~~E.~~F. The enclosure for the controller shall be a combined 120/240 volt commercial meter socket with enclosure, as required.

1. The enclosure unit shall have a compact, double door, front and back design; to provide viewing and programming convenience.
   a. Construction shall be 100 percent stainless steel; finish shall be brushed stainless steel.
   b. The unit shall be weather and vandal resistant, NEMA TYPE 3R rated, with three-point locking system; and shall be UL listed.
   c. The unit shall have a 10-year limited warranty.
2. Meter section:
   a. UL listed, E.U.S.E.R.C. 308 accepted commercial meter socket, 100 amp rated, with test block bypass provision.
   b. Hinged viewing window to provide convenient access for metering agency.
   c. Shall include 100 amp load center with 8 positions.
   ~~c.~~d. Surge/line protection shall be WeatherTRAK WT2W-LSP. Line surge protection required for every five valves or 500 ft along the two-wire path.
3. The enclosures shall be Strong Box Metered Stainless Steel Combination Enclosure, Model SB- 24SS / 120/240 V, as required and as manufactured by V.I.T. Products, Inc.

2.10 MISCELLANEOUS ITEMS

A. Miscellaneous appurtenant items shall be provided as indicated on the drawings or as required to complete the sprinkler system.

2.11 PIPE BEDDING AND BACKFILL MATERIALS

A. Bedding: As specified in Sections 02112 and 02116.

B. Backfill: As specified in Sections 02112 and 02116.

2.12 ACCESSORIES

A. Service Clamps: shall be bronze, double-strap type; Mueller No. H-16134, for up to 2 inch service lines.

B. Concrete for Thrust Restraints: Concrete type specified in Section 03300.

C. Manhole and Cover: Refer to Section 02340.

PART 3 EXECUTION

3.1 GENERAL

A. The Contractor shall furnish all labor, materials and equipment as required to construct the complete automatic, underground sprinkling system, as described herein and as shown on the design drawings, as indicated on the submittal drawings; and shall furnish and install all supplementary and miscellaneous items, appurtenances, and devices incidental to or necessary for a workable and complete sprinkling system installation.

B. All material shall be installed according to the manufacturer's written instructions and recommendations.

C. The Contractor shall test the entire sprinkling system to assure proper operation prior to final inspection with City representation for systems check.

3.2 EXAMINATION

A. Verify that design drawings conform to project conditions.

B. Verify that existing water main sizes and locations are as indicated on the drawings.

3.3 PREPARATION

A. Cut pipe ends square, ream pipe ends to full pipe diameter, remove burrs.

B. Remove scale and dirt on inside and outside before assembly.

C. Prepare pipe connections to equipment with flanges, mechanical joints or mechanical couplings.

3.4 TRENCHING

A. Trenching for the sprinkling system shall be done to ensure proper grades, slopes and alignment; and to provide minimum cover over main lines of 24-inches and 12-inches over laterals.

B. See Section 02112 and Sections 02115 and 02116 for additional requirements.

C. Hand trim excavation for accurate placement of pipe to elevations indicated.

D. Form and place concrete for pipe thrust restraints at each change of pipe direction. Place concrete to permit full access to pipe and pipe accessories. Provide required area of thrust restraint bearing on subsoil as indicated on the drawings.

E. Backfill around sides and to top of pipe zone with pipe bedding material, tamp in place and compact to required density.

F. Backfill trench from top of pipe zone to top of trench with trench backfill material, tamp in place and compact to required density.

3.5 INSTALLATION - PIPE

A. Group piping with other piping work whenever practical, per City Standard LS-11.

B. Establish elevations of buried piping to ensure not less than 2 feet of cover over main lines and 12 inches over laterals; or as indicated on the drawings.

C. Install pipe to indicated elevation to within tolerance of one inch.

D. Install ductile iron piping and fittings to AWWA C600.

E. Install PVC pressure pipe and fittings to ASTM D2774.

F. Install pipe lines to line and grade indicated.

G. Install pipe to allow for expansion and contraction without stressing pipe or joints.

H. Slope water pipe and position drains at low points.

I. Install trace wire above top of PVC and PE pipe; coordinate with Section 02112.

3.6 INSTALLATION - VALVES

A. Set valves on concrete block.

B. Center and plumb valve box over valve operating nut. Set box cover flush with finished grade.

3.7 INSTALLATION - CONTROL VALVES

A. Install control valves where and as shown on the submittal drawings.

1. Each control valve shall have threaded unions installed immediately upstream and downstream of all valves.
2. Each control valve shall have its own isolation valve, immediately upstream of the first union. No “Action” ~~union~~ manifolds allowed. ~~or “Action” union ball valves.~~
3. Install only one control valve per rectangular box. Valve box to be Carsen Jumbo size, or approved equal by the City.
4. Use of male adapters are prohibited.

B. Set valves on concrete block.

C. Center and plumb valve boxes and brace over valves. Set box cover flush, not level, with finished grade. All valve lids to have label of the assigned zone number.

3.8 INSTALLATION - QUICK-COUPLING VALVES

A. Quick-coupling valves shall be installed where and as shown on the submittal drawings.

B. Quick-coupling valves are to be installed in the system to provide the Owner access so that the system can be winterized by blowing out the system with compressed air; therefore, the valves shall be located as indicated on the drawings.

3.9 INSTALLATION - AUTOMATIC CONTROLLER

A. The controller and remote control valves shall be ~~of the same manufacturer~~compatible, having similar operational and adjustment features.

B. The controller shall have a weatherproof panel enclosure; with the controller mounted on a pedestal, where and as indicated on the drawings; in such a manner that all normal adjustments can be conveniently made by the operator.

C. The controller shall be properly grounded in accordance with local codes.

D. Control wire shall be installed from the controller to all control valves and other equipment as required for proper operation of the sprinkling system.

3.10 WIRE AND ELECTRICAL WORK

A. Electrical control and ground wire shall be suitable for sprinkler control cable of sizes indicated on the drawings and as recommended by the manufacturer or supplier.

B. Use Type "UF", 600 volt, stranded or solid copper, single conductor wire, with PVC insulation and bearing UL-approved for direct underground burial, for connecting the automatic remote control valves to the automatic controller.

1. Use wire with 4/64-inch insulation, minimum covering of ICC-100 compound for positive weatherproofing protection.
2. For wire sizes 14, 12, 10 and 8 use a single conductor solid copper wire; and for sizes 6 and 4 use stranded copper wire.
3. Control or "hot" wires shall be red and all common or "ground" wires shall be white.

C. Make all connections with UL acceptance 3M DBRY-6 type seal to make a waterproof connection.

D. ~~Bury wires underneath main line pipe when in the same trench as the pipe.~~Verify that all wire types and installation procedures conform to NEC and local codes.

3.11 INSTALLATION - SPRINKLER HEADS

A. Flush the sprinkler system thoroughly to remove all foreign materials prior to the installation of sprinkler heads.

B. Install rotor pop-up heads with a swing joint connection, as indicated on the drawings.

1. All swing joints shall consist of three 90 degree Schedule 40 PVC street ells and Schedule 80 nipples with a minimum length of 12 inches.
2. Size of swing joint pipe and fittings shall be as shown on the drawings.

SECTION 02726

LANDSCAPING

PART 1 GENERAL

1.1 SECTION INCLUDES

A. Preparation of subsoil.

B. Fertilizing.

C. Seeding

D. Maintenance.

1.2 RELATED SECTIONS

A. Section 02112 - Trenching: Preparation of subsoil and placement of topsoil in preparation for the work of this section.

B. Section 02100- Roadway and General Excavation: Slopes protection and topsoil placement.

1.3 REFERENCES

A. Standards of Official Seed Analysis of North America.

B. ANSI Z60.1, American Standard for Nursery Stock.

1.4 DEFINITIONS

A. Weeds: Includes Cheatgrass (Bromus Tectorum), Dandelion, Jimsonweed, Quackgrass, Horsetail, Morning Glory, Rush Grass, Mustard, Lambsquarter, Chickweed, Cress, Crabgrass, Canadian Thistle, Nutgrass, Poison Oak, Blackberry, Tansy Ragwort, Johnson Grass, Poison Ivy, Nut Sedge, Nimble Will, Bindweed, Bent Grass, Wild Garlic, Perennial Sorrel, and Phragmites.

1.5 SUBMITTALS

A. See appropriate sections of the Contract Documents for submittal procedures.

B. Certification: Submit certification of grass species and location of seed source.

C. Maintenance Data: Include maintenance instructions, cutting method and maximum height; types, application frequency and recommended coverage of fertilizer.

D. NOI permit and Erosion Control Plan per section 01700.

1.6 QUALITY ASSURANCE

A. Seeds.

1. Vendor: Company specializing in supplying seed with a minimum five years' experience, and certified by the State of Utah.

2. Installer Qualifications: Company accepted by the seed vendor.

B. Trees and Shrubs.

1. Vendor: Company specializing in growing and cultivating trees and shrubs with a minimum five years' experience, and certified by the State of Utah.
2. Installer Qualifications: Company specializing in installing and planting trees and accepted by tree supplier.

1.7 REGULATORY REQUIREMENTS

A. Comply with regulatory agencies for fertilizer and herbicide composition.

B. Provide certificate of compliance from authority having jurisdiction indicating acceptance of fertilizer and herbicide mixture.

1.8 MAINTENANCE AND SERVICE

A. Furnish service and maintenance of seeded or sodded areas prior to acceptance onto warranty as well as up to the end of warranty when applicable. Seeded areas shall have a 100 percent coverage of full, established growth, free of all weeds, prior to acceptance onto warranty.

PART 2 PRODUCTS

2.1 MATERIALS

A. Lawn Seed.

~~A.~~1. Seeded area is to be irrigated, maintained, and kept weed free by the contractor until the turf is fully established with a root depth of 4 inches before acceptance by the City and/or start of the ~~it enters~~ warranty period per the City's land development code.

~~1.~~2. Lawn Grass Mix. Lawn grass seed shall be fresh, clean, new crop seed; mechanically premixed to the specified proportions. Lawn grass seed shall be a blend of the following seeds: Kentucky Bluegrass, 80%, Rye Grass, 20%; planted at a rate of 3.0 pounds per 1000 square feet.

~~2.~~3. Standards. Grass seeds shall comply with "Standards of Official Seed Analysts of North America," published by the Association of Official Seed Analysts, most recent edition; for 85% purity, 80% germination and 1% (maximum) weed seed (68% PLS).

~~3.~~4. Delivery. Seed shall be delivered to the site in original unopened containers, bearing the dealer's guaranteed analysis and germination percentage and a certificate or stamp or release by a County agriculture commissioner.

~~4.~~5. Seed to be applied by hydraulic method shall be mixed with wood fiber mulch, fertilizer and polymer at 50 pounds per 100 square feet.

~~5.~~6. Fertilizer: Recommended for grass, with fifty percent of the elements derived from organic sources; of proportion necessary to eliminate any deficiencies of topsoil, as indicated by analysis.

~~6.~~7. Water: Clean, fresh and free of substances or matter which could inhibit vigorous growth of grass.

B. Trees: Shall be Grade A trees of the type acceptable to the City Engineer; with deciduous 2 ½" caliper, ornamental 1 ½" caliper, and evergreen 6' tall. Trees shall be grown in climatic

D. Lightly water to aid the dissipation of fertilizer.

3.4 PLANTING SEED

A. Seeding.

~~A.~~ Turf only. Seeded area is to be irrigated, maintained, and kept weed free by the contractor until the turf is fully established with a root depth of 4 inches prior to acceptance by the City and/or prior to start of the warranty period per the City's land development code.

1. Landscaped Areas. Landscaped areas shall be seeded with grass seed and sod, as required, as described herein.

B. Seeding shall not be performed when the wind velocity exceeds 5 miles per hour, or is determined detrimental to the uniform distribution of seed.

C. Till areas to be planted to a depth of not less than 4-inches prior to seeding.

D. Grade planting areas smooth, even surface with a loose, uniformly fine texture. Roll and rake and remove ridges and fill in depressions as required.

E. Moisten prepared seeding area by sprinkling to a depth of six inches before planting; the area shall be surface dry at the time of application. Do not create a muddy soil condition.

F. Seed shall be applied by hydraulic method with a hydro-seeder at the coverage rate recommended by the seed vendor. Seed may be applied by broadcast or drilled method at the recommended coverage by the seed vendor.

G. Seeded areas shall have a 100 percent coverage of full, established growth that is free of all weeds.

H. Rate of Application.

1. Lawn Grass seed mix shall be applied at rate of ~~3~~ 4 pounds per 1000 square feet.

I. All materials must be available for inspection prior to application.

J. Restore prepared areas to specified condition if eroded or otherwise disturbed after fine grading and prior to planting.

3.5 PLANTING TREES

A. Trees. Trees shall be planted where accepted by the City.

B. Trees shall be planted during normal planting season.

1. Excavate only for depth of root ball. The excavated area for tree planting shall be at least two times the diameter of the root ball, or as recommended by the supplier.
2. Place trees for final orientation review by the City Engineer prior to backfilling the root ball.
3. Installation of trees shall be done according Drawing No. LS-13; and as recommended by the supplier. Backfill material shall be acceptable to the supplier and inspected and accepted by the City Inspector.

1. General: Maintain trees prior to acceptance as well as through the warranty period when applicable. Supply additional top soil where areas have been affected by erosion or settlement.
2. Maintain tree health immediately after planting. Trim only dead or broken branches; remove clippings and dead branches from the site. Control diseases.
   ~~a. Prune dead and broken branches only during first year. For deciduous trees, remove branches less than 5 feet above grade during the second year.~~
3. Watering:
   a. After planting, keep ground continuously moist until healthy growth is established.
   b. Thereafter, deep root water trees two times per month during first year of establishment.
   c. Deep root watering is required for coniferous trees during winter months.
4. Weeding: Uproot and remove weeds completely. Do not allow growth and germination of weed seeds. Fill in large holes caused by weeding with top soil and rake smooth.
   a. Maintain weed free tree rings with 3-inch mulch depth. Tree rings to have 2 foot radius.
5. Protection: Protect trees against traffic by erecting temporary barriers and warning signs. Replant damaged trees.
6. Maintain wrappings, guys, turnbuckles, and stakes. Adjust turnbuckles to keep wire tight. Repair or replace accessories where required.

C. Aeration. Aerate turf areas a minimum of two times per year; in the spring and in the fall. Core aerate; leave cores and break up if needed.

D. Irrigation System.

1. Repair all breaks immediately.
2. Perform weekly inspections and make needed adjustments.
3. Make seasonal adjustments to controllers as needed.

E. Erosion and Settlement. Repair trench settling, ruts, and rivulets caused by mowing equipment, irrigation and/or precipitation immediately.

3.8 WARRANTY

A. All landscaping will be covered by a warranty for a period of one year.

B. Seeded Areas. At the end of the warranty period, seeded areas shall have a 100 percent coverage of full, established growth; free of all noxious weeds, as defined in this section's definitions.

1. At end of warranty period, replant areas showing root growth failure, bare or thin spots, and eroded or settled areas within 10-days of written notice. Plant with materials of like kind and size, planted in the next growing season, with a new warranty commencing on the date of planting. All corrective work will be at no additional cost to the Owner.

C. Trees. Warranty for trees shall include death, unhealthy conditions, or if trees die from poor planting practices. Replace any unsatisfactory or dead tree within 10-days of written notice. Provide replacement trees of same size and species, planted in the next growing season,

SECTION 02727

RESTORING NATIVE AREA

PART 1 GENERAL

1.1 SECTION INCLUDES

A. Preparation of subsoil.

B. Fertilizing.

C. Seeding

D. Maintenance.

1.2 RELATED SECTIONS

A. Section 02112 - Trenching: Preparation of subsoil and placement of topsoil in preparation for the work of this section.

1.3 REFERENCES

A. Standards of Official Seed Analysis of North America.

B. ANSI Z60.1, American Standard for Nursery Stock.

1.4 DEFINITIONS

A. Weeds: Includes Cheatgrass (Bromus Tectorum), Dandelion, Jimsonweed, Quackgrass, Horsetail, Morning Glory, Rush Grass, Mustard, Lambsquarter, Chickweed, Cress, Crabgrass, Canadian Thistle, Nutgrass, Poison Oak, Blackberry, Tansy Ragwort, Johnson Grass, Poison Ivy, Nut Sedge, Nimble Will, Bindweed, Bent Grass, Wild Garlic, Perennial Sorrel, and Phragmites.

1.5 SUBMITTALS

A. See appropriate sections of the Contract Documents for submittal procedures.

B. Certification: Submit certification of grass species and location of seed source.

C. Maintenance Data: Include maintenance instructions, cutting method and maximum height; types, application frequency, and recommended coverage of fertilizer.

1.6 QUALITY ASSURANCE

A. Seeds.

1. Vendor: Company specializing in supplying seed with a minimum five years' experience, and certified by the State of Utah.
2. Installer Qualifications: Company accepted by the seed vendor.

B. Trees and Shrubs.

1. Vendor: Company specializing in growing and cultivating trees and shrubs with a minimum five years' experience, and certified by the State of Utah.
2. Installer Qualifications: Company specializing in installing and planting trees and accepted by tree supplier.

1.7 REGULATORY REQUIREMENTS

A. Comply with regulatory agencies for fertilizer and herbicide composition.

B. Provide certificate of compliance from authority having jurisdiction indicating acceptance of fertilizer and herbicide mixture.

1.8 MAINTENANCE SERVICE

A. Furnish service and maintenance of seeded or sod areas up to the end of warranty.

PART 2 PRODUCTS

2.1 MATERIALS

A. ~~Restoring Native Grass Seed.~~BioNative Sod.

1. ~~Native Grass Mix. Native grass seed shall be fresh, clean, new crop seed; mechanically premixed to the specified proportions. Native grass seed shall be a blend of the following seeds:~~BioNative sod supplied from BioGrass Sod Farms, Inc. or equivalent sod comprised of Idaho Bentgrass seed, and Utah native wheat grass seed; Streambank Wheatgrass, Western Wheatgrass and Thickspike Wheatgrasss with 98% purity and grown in with NanoGro fertilizer for thicker density and establishment.

~~1.~~

~~TYPE 2: Grass Mix (Tall)~~		~~%~~	
~~Quick Guard (Sterile tricale hybrid)~~		~~21.74%~~	
~~Crested Wheatgrass (Agropyron cristatum)~~		~~15.21%~~	
~~Slender Wheatgrass (Agropyron trachcaulum)~~		~~19.57%~~	
~~Bluebunch Wheatgrass (Agropyron spicatum)~~		~~13.04%~~	
~~Intermediate Wheatgrass (Agropyron intermedium)~~		~~13.05%~~	
~~Green Needlegrass (Stipa virdula)~~		~~5.43%~~	
~~Western Wheatgrass (Agropyron smithii)~~		~~5.44%~~	
~~Sheep Fescue (Fesctuca Ovina)~~		~~3.48%~~	
~~Sandberg Bluegrass (Poa sandbergii)~~		~~2.61%~~	
~~Sand Dropseed (Sporobolus Crytandrus)~~		~~0.43%~~	
~~Totals~~		~~100.00%~~	

~~TYPE 3: Grass Mix (Short)~~	~~BROADCAST~~	~~%~~	
~~Blue Grama (Bouteloua gracilla)~~	~~4.0~~	~~30.77%~~	
~~Sheep fescue (festuca ovina)~~	~~5.0~~	~~38.46%~~	
~~Sandberg Bluegrass (Poa sandbergii)~~	~~4.0~~	~~30.77%~~	
~~Totals~~	~~13.0~~	~~100.00%~~	

~~2. Standards. Grass seeds shall comply with "Standards of Official Seed Analysts of North America," published by the Association of Official Seed Analysts, most recent edition; for 85% purity, 80% germination and 1% (maximum) weed seed (68% PLS).~~

~~3. Delivery. Seed shall be delivered to the site in original unopened containers, bearing the dealer's guaranteed analysis and germination percentage and a certificate or stamp or release by a County agriculture commissioner.~~

~~4. Seed to be applied by hydraulic method shall be mixed with wood fiber mulch, fertilizer and polymer at 50 pounds per 100 square feet.~~

PART 3 EXECUTION

3.1 EXAMINATION

A. Verify that prepared soil base is ready to receive the work of this section with no existing weeds.~~.~~

3.2 PREPARATION

A. Prepare sub-grade in accordance with Section 02116.

B. Place topsoil where required. Surface must be free of rock greater than 3 inches in diameter and free of trash and debris.

~~3.3 PLANTING SEED~~

~~A. Seeding.~~

~~1. Off-Site Restoration. All off-site work through areas that are covered with native grasses shall be reseeded with native grass seed, as required, as described herein.~~

~~B. Seeding shall not be performed when the wind velocity exceeds 5 miles per hour, or is determined detrimental to the uniform distribution of seed.~~

~~C. Till areas to be planted to a depth of not less than 4-inches prior to seeding.~~

~~D. Grade planting areas smooth, even surface with a loose, uniformly fine texture. Roll and rake and remove ridges and fill in depressions as required.~~

~~E. Moisten prepared seeding area by sprinkling to a depth of six inches before planting; the area shall be surface dry at the time of application. Do not create a muddy soil condition.~~

~~F. Seed shall be applied by hydraulic method with a hydro-seeder at the coverage rate recommended by the seed vendor. Seed may be applied by broadcast or drilled method at the recommended coverage by the seed vendor.~~

~~G. Rate of Application.~~

~~1. Native Grass seed mix shall be applied at a supplier acceptable rate to obtain 70% growth and acceptance at end of warranty period.~~

~~H. All materials must be available for inspection prior to application.~~

~~I. Restore prepared areas to specified condition if eroded or otherwise disturbed after fine grading and prior to planting.~~

~~3.4~~3.3 MAINTENANCE REQUIREMENTS FOR NATIVE AREA DURING WARRANTY PERIODS

A. Furnish service and maintenance of restored area until 70% coverage is established.

B. Area must be free of signs of erosion and evasive species.

C. Area must be kept free of litter and mowed and trimmed as required in the fall of each year.

D. Irrigation System ~~may~~ will be required in order to obtain 70% vegetative coverage.

E. Irrigation System

1. Repair all breaks immediately.
2. Perform weekly inspections and make needed adjustments.
3. Make seasonal adjustments to controllers as needed.

F. Erosion and Settlement. Repair trench settling, ruts, and rivulets caused by mowing equipment, irrigation and/or precipitation immediately.

~~3.5~~3.4 WARRANTY

A. All landscaping will be covered by a warranty for a period of one year.

B. Seeded Areas. At the end of the warranty period, seeded areas shall have a 70 percent coverage of full, established growth; free of all weeds.

1. At end of warranty period, replant areas showing root growth failure, bare or thin spots, and eroded or settled areas within 10-days of written notice. Plant with materials of like kind and size, planted in the next growing season, with a new warranty commencing on the date of planting. All corrective work will be at no additional cost to the Owner.

END OF SECTION

DIVISION 05

ELECTRICAL

5. Sheet Metal: Use sheet metal screws.
6. Wood Elements: Use wood screws.

PART 3 EXECUTION

3.1 INSTALLATION

A. Locate and install anchors, fasteners, and supports in accordance with NECA "Standard of Installation".

1. Do not fasten supports to pipes, ducts, mechanical equipment, or conduit.
2. Obtain permission from City Engineer before drilling or cutting structural members.

B. Rigidly weld support members or use hexagon-head bolts to present neat appearance with adequate strength and rigidity. Use spring lock washers under all nuts.

C. Install surface-mounted cabinets and panel boards with minimum of four anchors.

D. In wet and damp locations use steel channel supports to stand cabinets and panel boards 1 inch off wall. In corrosive environments such as wet wells, chlorine rooms, pools, etc. supporting means such as strut and conduit straps shall be made of 316 stainless steel, fiberglass, or equal. Steel structural supports shall have an anti-corrosion epoxy coating or equal.

E. Use sheet metal channel to bridge studs above and below cabinets and panel boards recessed in hollow partitions.

END OF SECTION

SECTION 05075

ELECTRICAL IDENTIFICATION

PART 1 GENERAL

1.1 SECTION INCLUDES

A. Nameplates and labels.

B. Wire and cable markers.

C. Conduit markers.

D. Field-painted identification of conduit.

1.2 RELATED SECTIONS

A. Section 04900 - Paints and Coatings.

1.3 REFERENCES

A. NFPA 70 - National Electrical Code; National Fire Protection Association.

1.4 SUBMITTALS

A. See Section 01300 - Administrative Requirements for submittals procedures.

B. Product Data: Provide catalog data for nameplates, labels, and markers.

C. Manufacturer's Instructions: Indicate application conditions and limitations of use stipulated by product testing agency specified under Quality Assurance. Include instructions for storage, handling, protection, examination, preparation and installation of product.

1.5 QUALITY ASSURANCE

A. Conform to requirements of NFPA 70.

B. Products: Listed and classified by Underwriters Laboratories, Inc. as meeting their standards for the purpose specified and indicated.

PART 2 PRODUCTS

2.1 NAMEPLATES AND LABELS

A. Nameplates: Engraved three-layer laminated plastic, white letters on black background.

1. Arc Flash Risk Assessment Labeling: Durable printed moisture and sunlight resistant adhesive label containing the following information-

   a. A square box with black lettering on orange background containing the word ‘warning’ or red background containing the word ‘danger’ as appropriate
   b. Calculated available fault current
   c. System nominal voltage
   d. Equipment name

e. Name and circuit number of upstream source feeding equipment

f. Calculated level of arc flash PPE required

g. Approach boundary dimensions

~~A.~~h. Information shall be obtained from an incident energy analysis and the method of calculation and data to support the information for the label shall be furnished to, and accepted by the City Engineer prior to affixing the label.

B. Locations:

1. Each electrical distribution and control equipment enclosure.

C. Letter Size:

1. Use 1/8 inch letters for identifying individual equipment and loads.

D. Labels: Embossed adhesive tape, with 3/16 inch white letters on black background. Use only for identification of individual wall switches and receptacles, control device stations, and appurtenant items.

2.2 WIRE MARKERS

A. Description: tape type wire markers or heat shrink.

B. Locations: Each conductor at panel board gutters, pull boxes, outlet boxes, and junction boxes and each load connection.

C. Legend:

1. Power and Lighting Circuits: Branch circuit or feeder number indicated on drawings.
2. Control Circuits: Control wire number indicated on schematic and interconnection diagrams on drawings. 120/208-240 vault.

D. Phase ID: Black, red, blue, white, green, 120/208 - 240 volt and brown, orange, yellow, grey, green 277/480 volt. Insulated conductors sized AWG 6 and smaller shall have continuous colored outer insulation along its entire length. Conductors sized AWG 4 and larger shall be permitted to be field identified with at least 6 inches of phase tape neatly wrapped at all terminations, condulets, pull boxes, and similar.

2.3 CONDUIT MARKERS

A. Location: Furnish markers for each conduit longer than 6 feet.

B. Spacing: 20 feet on center.

2.4 UNDERGROUND WARNING TAPE

A. Description: 4 inch wide plastic tape, detectable type colored red with suitable warning legend describing buried electrical lines.

PART 3 EXECUTION

3.1 PREPARATION

A. Degrease and clean surfaces to receive nameplates and labels.

SECTION 05123

BUILDING WIRE AND CABLE

PART 1 GENERAL

1.1 SECTION INCLUDES

A. Wire and cable for 600 volts and less.

B. Wiring connectors and connections.

1.2 RELATED SECTIONS

A. Section 02112 - Trench Excavation.

B. Section 02115 - Excavation.

C. Section 02116 - Fill and Backfill: Bedding and backfilling.

D. Section 05075 - Electrical Identification.

1.3 REFERENCES

A. NECA (INST) - NECA Standard of Installation; National Electrical Contractors Association; latest edition.

B. NETA STD ATS - Acceptance Testing Specifications for Electrical Power Distribution Equipment and Systems; International Electrical Testing Association; latest edition.

C. NFPA 70 - National Electrical Code; National Fire Protection Association.

1.4 SUBMITTALS

A. See Section 01300 - Administrative Requirements, for submittal procedures.

B. Product Data: Provide for each wire and cable type.

C. Test Reports: Indicate procedures and values obtained.

D. Manufacturer's Installation Instructions: Indicate application conditions and limitations of use stipulated by product testing agency.

E. Project Record Documents: Record actual locations of components and circuits.

1.5 QUALITY ASSURANCE

A. Conform to requirements of NFPA 70.

B. Products: Listed and classified by Underwriters Laboratories Inc. as meeting their standards for the purpose specified and indicated.

PART 2 PRODUCTS

2.1 WIRING REQUIREMENTS

A. Concealed Dry Interior Locations: Use only building wire with Type THHN insulation in raceway.

B. Exposed Dry Interior Locations: Use only building wire with Type THHN insulation in raceway.

C. Wet or Damp Interior Locations: Use only building wire with Type XHHW.

D. Exterior Locations: Use only building wire with Type THWN insulation in raceway.

E. Underground Installations: Use only building wire with Type XHHW-2 insulation in raceway.

F. Use stranded copper conductor for feeders and branch circuits.

G. Use stranded copper conductors for control circuits.

H. Use copper conductor not smaller than 12 AWG for power and lighting circuits.

I. Use copper conductor not smaller than 16 AWG for control circuits.

J. Use 10 AWG conductors for 20 ampere, 120 volt branch circuits longer than 75 feet~~.~~ or calculated minimum size required by NFPA 70 for purposes of required voltage drop, whichever is greater.

K. Use 10 AWG conductors for 20 ampere, 277 volt branch circuits longer than 200 feet or calculated minimum size required by NFPA 70 for purposes of required voltage drop, whichever is greater.~~.~~

L. Conductor sizes are based on copper.

2.2 BUILDING WIRE

A. Description: Single conductor insulated wire.

B. Conductor: Copper.

C. Insulation Voltage Rating: 600 volts.

D. Insulation: NFPA 70, Type THHN.

2.3 WIRING CONNECTORS

A. Solderless Pressure Connectors:

B. Spring Wire Connectors:

C. Compression Connectors:

SECTION 05131

CONDUIT

PART 1 GENERAL

1.1 SECTION INCLUDES

A. Conduit, fittings and conduit bodies.

1.2 RELATED SECTIONS

A. Section 05060 - Grounding and Bonding.

B. Section 05070 - Hangers and Supports.

C. Section 05075 - Electrical Identification.

D. Section 05138 - Boxes.

1.3 REFERENCES

A. ANSI C80.1 - American National Standard Specification for Rigid Steel Conduit -- Zinc Coated; latest edition.

B. ANSI C80.3 - American National Standard Specification for Electrical Metallic Tubing -- Zinc Coated; latest edition.

C. NECA (INST) - NECA Standard of Installation; National Electrical Contractors Association; latest edition.

D. NEMA FB 1 - Fittings, Cast Metal Boxes, and Conduit Bodies for Conduit and Cable Assemblies; National Electrical Manufacturers Association; latest edition.

E. NEMA RN 1 - Polyvinyl Chloride (PVC) Externally Coated Galvanized Rigid Steel Conduit and Intermediate Metal Conduit; National Electrical Manufacturers Association; latest edition.

F. NEMA TC 2 - Electrical Plastic Tubing (EPT) and Conduit (EPC-40 and EPC-80); National Electrical Manufacturers Association; latest edition.

G. NEMA TC 3 - PVC Fittings for Use with Rigid PVC Conduit and Tubing; National Electrical Manufacturers Association; latest edition.

H. NFPA 70 - National Electrical Code; National Fire Protection Association.

1.4 SUBMITTALS

A. See Section 01300 - Administrative Requirements for submittals procedures.

B. Product Data: Provide for metallic conduit, flexible metal conduit, liquid tight flexible metal conduit, metallic tubing, nonmetallic conduit, flexible nonmetallic conduit, nonmetallic tubing, fittings, and conduit bodies.

C. Project Record Documents: Accurately record actual routing of conduits larger than 2 inches.

1.5 QUALITY ASSURANCE

A. Conform to requirements of NFPA 70.

B. Products: Listed and classified by Underwriters Laboratories, Inc. as meeting their standards for the purpose specified and indicated.

1.6 DELIVERY, STORAGE, AND HANDLING

A. Accept conduit on site. Inspect for damage.

B. Protect conduit from corrosion and entrance of debris by storing above grade. Provide appropriate covering.

C. Protect PVC conduit from sunlight.

PART 2 PRODUCTS

2.1 CONDUIT REQUIREMENTS

A. Conduit Size: Comply with NFPA 70.

1. Minimum Size: 3/4 inch unless otherwise specified.

B. Underground Installations:

1. More than Five Feet from Foundation Wall: Use schedule 40 non-metallic conduit or schedule 80 thickwall non-metallic conduit.
2. Within Five Feet from Foundation Wall: Use plastic coated GRC conduit or thickwall GRC rigid conduit with corrosion tape.
3. In or Under Slab on Grade: Use schedule 40 conduit or schedule 80 thickwall non-metallic conduit.
4. Minimum Size: 1 inch.

C. Outdoor Locations Above Grade: Use rigid steel conduit or electrical metallic tubing.

D. In Slab Above Grade:

1. Use rigid steel conduit.
2. Maximum Size Conduit in Slab: one inch; 3/4 inch for conduits crossing each other.

E. Wet and Damp Locations: GRC, RSC.

F. Dry Locations:

1. Concealed: Use rigid steel conduit or electrical metallic tubing.
2. Exposed: GRC or RSC.

G. Corrosive Locations such as wet wells, chlorine rooms, pools, etc.: PVC coated GRC or RMC

~~2.~~

2.2 METAL CONDUIT

A. Rigid Steel Conduit: ANSI C80.1.

B. Fittings and Conduit Bodies: NEMA FB 1; material to match conduit.

1. No Aluminum

C. Conduit must be threaded, no threadless fittings.~~thread/OSS fittings.~~

2.3 PVC COATED METAL CONDUIT

A. Description: NEMA RN 1; rigid steel conduit with external PVC coating, ~~20~~ 40 mil thick and 2 mil urethane interior lining and thread coating.

B. Fittings and Conduit Bodies: NEMA FB 1; steel fittings with external PVC coating to match conduit.

2.4 FLEXIBLE METAL CONDUIT

A. Description: Interlocked steel construction.

B. Fittings: NEMA FB 1.

2.5 LIQUIDTIGHT FLEXIBLE METAL CONDUIT

A. Description: Interlocked steel construction with PVC jacket.

B. Fittings: NEMA FB 1.

2.6 ELECTRICAL METALLIC TUBING (EMT)

A. Description: ANSI C80.3; galvanized tubing.

B. Fittings and Conduit Bodies: NEMA FB 1; steel or malleable iron compression type.

2.7 NONMETALLIC CONDUIT

A. Description: NEMA TC 2; Schedule 40 PVC and Schedule 80 PVC.

B. Fittings and Conduit Bodies: NEMA TC 3.

PART 3 EXECUTION

3.1 EXAMINATION

A. Verify that field measurements are as shown on drawings.

B. Verify routing and termination locations of conduit prior to rough-in.

C. Conduit routing is shown on drawings in approximate locations unless dimensioned. Route as required to complete wiring system.

SECTION 05132

CONDUIT: FIBER OPTIC/COMMUNICATION

PART 1 GENERAL

1.1 SECTION INCLUDES

A. Conduit for fiber optic and communications cables.

B. Detectable pull tape, conduit, and all materials, labor, workmanship, equipment, and incidental items required for a complete system of conduit.

1.2 RELATED SECTIONS

A. Section 02116: Fill and Backfill

1.3 REFERENCES

A. ASTM F 2160: Solid Wall High Density Polyethylene (HDPE) Conduit based on Controlled Outside Diameter (OD).

B. Underwriters Laboratories (UL)

1.4 DEFINITIONS Not Used

1.5 SUBMITTALS

A. Manufacturer's product data sheets and recommended installation instructions.

B. Manufacturer's warranties and parts lists

C. Conduit Mandrel Test Form prior to substantial completion.

PART 2 PRODUCTS

2.1 MATERIALS

A. Conduit and fittings for communication and fiber optic conduit.

1. High Density Polyethylene (HDPE) SDR11 rated complying with ASTM F 2160.
    a. HDPE conduit with smooth outer wall and ribbed or smooth interior wall.
    b. Fittings and couplers rated for a minimum of 130 psi.
    c. Mechanical type couplers when joining HDPE and PVC conduits.
2. Microduct
    a. HDPE microduct with an outside/inside diameter of 0.500/0.394 inch (12.7/10 mm) or 0.630/0.512 inch (16/13 mm) or 0.709/0.551 (18/14 mm), as shown.
    b. Microduct having a ribbed interior.
    c. Watertight couplers rated for a minimum of 200 psi.
    d. Microduct bundle within a single 0.100 inch thick polyethylene oversheath.
    e. Microduct bundles must contain a factory installed #14 AWG solid, insulated locate wire and a minimum of two rip cords for removal of oversheath.

B. Conduit Banks

1. New, prefabricated
2. ATMS Multi-duct Conduit Types
   a. 1D = four 1.25-inch conduits
   b. 2D = eight 1.25-inch conduits
   c. 4D = sixteen 1.25-inch conduits
3. Color-code each conduit or cell as follows:
   a. One, two, or three conduits gray
   b. 1D Bank 1 blue, orange, green and brown
   c. 2D Bank 1 blue, orange, green, and brown
      Bank 2 slate, white, red, and black
   d. 4D Bank 1 blue, orange, green, and brown
      Bank 2 slate, white, red, and black
      Bank 3 same as bank 1 with a contrasting stripe
      Bank 4 same as bank 2 with a contrasting stripe
4. Microduct types:
   a. Individual 0.500/0.394 inch (12.7/10 mm) or 0.630/0.512 inch (16/13 mm) microducts installed loosely within new or existing conduit.
   b. MD2, MD3, MD4 and MD7: microduct bundle containing two, three, four or seven 0.709/0.551 inch (18/14 mm) microducts respectively.
   c. Factory-assembled bundles for bundled applications.
5. Color-code microducts and oversheaths as follows:
   a. Individual microducts installed loosely within conduit or bundled within oversheath:
      1) blue
      2) orange
      3) green
      4) brown
      5) slate
      6) white
      7) red
      8) black
   b. Oversheaths:
      Bundle #1 blue
      Bundle #2 orange
      Bundle #3 green
      Bundle #4 brown

C. Detectable Pull Tape – flat profile, low stretch polyester, detectable, sequential footage marked, 1,200 lb tensile strength pull tape in each conduit.

D. Backfill

1. Refer to Section 02116.
2. Hand-mix grout

a. Minimum strength – 50 psi
b. Maximum strength – 150 psi
c. Slump – 5 inches to 10 inches

PART 3 EXECUTION

3.1 GENERAL

A. Maximum spacing between junction boxes and vaults

1. 1,000 ft for fiber optic cable on tangent surface street installations.
2. Reduce maximum spacing if horizontal or vertical deflection incurred during installation prevents the installation of cable within maximum pulling tension rating of the cable.
3. Notify City Public Improvements Inspector if utility avoidance requires junction box and conduit locations differing from requirements for deflection in this Section, article 3.2.

B. Minimum Cover of Conduit as per City Standards Details.

3.2 INSTALLATION

A. Prevent conduit from deflecting vertically or horizontally along its length by a ratio greater than 10:1, (no more than 4-inch deflection per 40 inch in length) when installing conduit that houses communication cable.

B. Prevent sum total of the vertical and horizontal conduit deflection or bend between any two junction boxes from exceeding 270 degrees when installing conduit.

C. Install conduit within 1 ft of existing parallel conduit run if the planned location of conduit is parallel to the existing traffic signal or ATMS conduit.

E. Install conduits that cross finished curbs and gutters, sidewalks, concrete flatwork, or textured or decorative surfaces by boring, jacking, or drilling. Replace any damaged concrete sections, joint to joint.

F. Proof all conduit before installation of cabling and detectable pull tape.

1. Use a mandrel at least 80 percent of the conduit diameter, at least twice as long as the conduit diameter, and composed of rigid material.
2. Schedule proofing with the City Public Improvement Inspector at least 1 working day in advance of performing the work.
3. Proof all conduit with a Department representative witness present.
4. Complete and submit a completed Conduit Mandrel Test Form for all ATMS conduit.
5. Proof microducts using proofing balls.
6. Proofing balls must maintain a minimum 80 percent fill ratio of inside diameter of the microduct being tested.
7. Proofing must occur after all junction boxes have been installed to final grade, including placement of flowable fill or hand-mix grout at junction box walls, and after all excavation in the immediate proximity of the conduit system has been completed.
    a. Re-proof any conduit segment where excavation has occurred near the conduits following initial proof testing.

G. Provide detectable pull tape in all conduits.

1. Install continuously between junction boxes.
2. Fasten securely to conduit plug and leave 6 ft of pull tape slack inside of the conduit.
3. Do not splice detectable pull tape in conduit.
4. Use flat profile, low stretch polyester, 1,200 lb tensile strength detectable pull tape that is sequential footage marked.
5. Verify that the pull tape is detectable throughout its entire length by performing a continuity test or equivalent verification.
6. Detectable pull tape not required in microducts.

H. Encase open trench conduit in 12 inches of sand bedding covered with backfill per City Standards.

I. Seal junction box wall around conduits using approved hand-mix grout.

J. Sleeves are acceptable under roadways.

1. Install and align per City Standard prior to placement of hard surfaces (concrete curb/gutter, asphalt pavement, etc.).
2. Coordinate with City Public Improvement Inspector prior to selection, use, and placement of sleeve.

K. Use HDPE conduit for underground application.

L. Warning Tape

1. Install orange warning tape with black legend “Caution - Buried Communication Cable,” in all trenches containing multi-duct conduit or conduit containing communication cables.
2. Not required when flowable fill is directly overlaid with asphalt pavement or PCCP.
3. Install red warning tape with black legend “Caution – Buried Electric”.
4. Not required when boring or plowing conduit.

M. Install a #14 AWG solid, insulated locate wire inside of new or existing conduit with individual microducts.

1. Verify that all locate wires are detectable throughout their entire length by performing a continuity test or equivalent verification.

3.3 TRENCH

A. Trench backfill per City Standards.

B. Sleeve foreign utilities that cross a trench so they are not encased in flowable fill.

C. Place all conduits in the same trench whenever possible.

D. Flowable Fill or Hand-mix Grout

1. Install flowable fill or approved hand-mix grout to the wall of junction box to seal conduit entry into junction box.
2. Clean excess flowable fill or hand-mix grout from the inside of the junction box.

E. Install all conduits so the flowable fill or sand backfill completely encases all exterior surfaces of the conduit.

1. Separate multi-duct conduits using a commercially available conduit spacer or approved equivalent.
2. Place spacers no more than 4 ft apart and not more than 2 ft from each coupler.

F. Anchor the conduit in trench at 16 ft intervals to maintain the required conduit depth during flowable fill placement.

G. Minimum separation between all conduits and the wall of the trench is 1½ inches.

3.4 BORE OR PLOW

A. Immediately contain, remove, and properly dispose of all excess drilling fluid.

3.5 USE OF EXISTING OR OCCUPIED CONDUIT

A. Maintain the physical condition and functional integrity of all cabling and wiring in existing or occupied conduit.

B. Cable or wire installation in an existing or occupied conduit.

1. Remove any existing fiber optic cable or copper wire.
2. Test the integrity and clean the conduit by successfully pulling a Department-approved mandrel through the conduit.
3. Re-pull existing and new fiber optic cable or copper wire together.
4. Perform all necessary splices and replace any impacted fiber cable and spider fan-out kits according to Section 13594.

C. Use existing conduit in-situ only if shown and as approved by the Engineer.

D. Intercept individual microducts from existing microduct bundle mid-span and reroute to new junction box location:

1. Type II-PC junction box
    a. Bury at existing microduct bundle depth.
    b. Notch the 24-inch box walls and install junction box over existing microduct bundle.
    c. Provide 12 inches of free draining granular backfill borrow underneath junction box.
    d. Encase all conduit in flowable fill or hand-mix grout where the conduit enters the junction box.
    e. Place locate ball or disk in junction box.
    f. Ground rod, and grout floor are not required.
2. Conduit and microduct bundle inside of buried Type II-PC junction box.

a. Install conduit from buried junction box to new junction box location for rerouting of individual microducts. Provide #14 AWG solid, insulated locate wire inside of new conduit between junction boxes.
b. Extend conduit and microduct oversheath 6 inches beyond inside wall of the junction box.
c. Expose microducts by removing no more than 20 inches of oversheath.
d. Identify and cut only the individual microducts to be rerouted.
e. Use approved couplers and extend microducts to new junction box using corresponding microduct color.
f. Splice all locate wires together using an approved waterproof connector.

1) Verify that the locate wire conductors are not exposed.

3. New junction box location

a. Install new junction box within 20 ft of buried junction box or within 20 ft of edge of roadway when existing microduct bundle is underneath roadway, to provide access to locate wire for mapping and locating purposes.

3.6 REPAIR OR RESTORATION

A. Restore all areas, including landscaping, concrete pavement, asphalt, finished curbs and gutters, box culverts, sewers, underground water mains, sprinkler systems, sidewalks, concrete flatwork, colored, textured, or decorative surfaces damaged during conduit and junction box installation to City Standards.

B. Coordinate with local utilities for utility repair.

C. Notify City Public Improvements Inspector of all necessary repairs.

D. Replace all damaged facilities in kind.

E. Buried microduct bundle coupling and repair:

1. Expose microducts by removing no more than 12 inches of oversheath beyond area to be coupled or repaired.

a. Trim microducts to length as necessary to eliminate all bends and deflection.

2. Use approved couplers.
3. Splice the locate wires together using an approved waterproof connector.

a. Verify that the locate wire conductors are not exposed.

4. Protect exposed microducts, couplers and locate wire using split duct.

a. Seal split duct joints and split duct ends around microduct bundle oversheath using approved waterproof sealing tape or other approved methods prior to backfill.
b. Do not use heat-shrink or cold-shrink protection methods.

END OF SECTION

SECTION 05133

POLYMER CONCRETE JUNCTION BOX

PART 1 GENERAL

1.1 SECTION INCLUDES

A. Polymer concrete junction boxes, ground rods, and maintenance markers. Includes Type I, Type II, and Type III Polymer-Concrete Junction Boxes.

1.2 RELATED SECTIONS

A. Section 02116: Fill and Backfill

B. Section 03300: Cast-In-Place Concrete

C. Section 05132: Conduit; Fiber Optic/Communication

1.3 REFERENCES

A. ASTM C 579: Compressive Strength of Chemical-Resistant Mortars, Grouts, Monolithic Surfacings, and Polymer Concretes

B. ASTM C 580: Flexural Strength and Modulus of Elasticity of Chemical-Resistant Mortars, Grouts, Monolithic Surfacings, and Polymer Concretes

C. American National Standards Institute (ANSI)

D. Society of Cable Telecommunications Engineers (SCTE) Standards

E. USDA Rural Utilities Service (RUS) Specifications

1.4 DEFINITIONS **Not Used**

1.5 SUBMITTALS **Not Used**

PART 2 PRODUCTS

2.1 FILL

A. 3/4” Free draining gravel – Refer to Section 02116.

B. Granular borrow – Refer to Section 02116.

C. Flowable fill – Refer to Section 02116.

D. Hand-mix grout

1. Minimum strength – 50 psi
2. Maximum strength – 150 psi
3. Slump – 5 inches to 10 inches

2.2 JUNCTION BOXES AND LIDS

A. Junction boxes – pre-cast polymer concrete. Refer to City Standard Drawings for dimensions of junction box types.

B. Furnish boxes, rings, and lids that meet all the requirements of ANSI/SCTE 77, including Tier 22 loading.

C. Use Type II-PC junction boxes unless approved or specified otherwise. Use split lids with Type III-PC junction boxes.

D. Use lids for all junction boxes specified by application.

1. Manufacture lids with the following marking in the logo area, in 1 inch cast in place recessed letters:
   a. "Fiber Optics" when the junction box contains only fiber optic cable or future use multi duct conduit.
   b. Traffic Signal, Street Lighting, Electrical, Communications and Landscaping may also use this type of description as an alternative to using attached name plates.
2. Manufacture lids with a recessed area to accommodate name plates used for all other Traffic Signal, Street Lighting, Electrical, Communications, and Landscaping applications.
   a. Attach name plates to each removable lid section as well as one to the inside wall of the junction box using adhesive and non-corroding screws. Use an adhesive that meets or exceeds the following criteria:
      1. Tensile Strength – 1200 psi
      2. Service temperature, cured – subzero to +140 F.
      3. Cure time – 24 hours
   b. Insert two non-corroding tamper resistant screws after adhesive is cured.

E. Lid Access Points – recessed reinforced steel pull slots rated for 3000 pounds to allow removal of cover with a hook or lever. Replace lid if damage occurs to the pulling point.

F. Lid Bolt Holes – self draining.

G. Bolts – Zinc plated recessed hex head coil bolts with washer.

2.3 UTILITY MARKER POST

A. Furnish and install Utility Marker Posts for each junction box location that is 'off-site' or installed in an undeveloped area. Refer to City Detail ST-27.

2.4 NOT USED

2.5 NOT USED

2.6 CONCRETE COLLAR

A. Class AA(AE) concrete – Refer to Section 03300.

2.7 EXPANSION JOINT MATERIAL

A. Preformed expansion joint filler. Refer to Standard Drawings and Section 03300.

2.8 LOCATE BALL OR DISK

A. Place a marker ball or disk in each junction box.

1. Color – orange
2. Requires no particular orientation when buried
3. Place in bottom of each box
4. Must produce a uniform, spherical RF field in all directions
5. Signal peak when directly over the ball
6. Meets RUS Specifications

PART 3 EXECUTION

3.1 BACKFILL

A. Place 12 inches of free draining gravel under junction boxes.

B. Compact granular borrow or approved native soil around the junction box collar. Match the top 6 inches to the composition, density, and elevation of the surrounding surface.

3.2 JUNCTION BOX AND EXTENSION

A. Install according to manufacturer's recommendations.

B. Precast junction boxes with precast conduit holes or drill holes to match conduit entry where required without damaging the box. Use grout to create a complete seal between conduit and the junction box wall. Finish grout smooth and flush with the interior wall.

1. Make drilled holes in junction box not more than ¼ inches larger than conduit diameter.
2. Seal conduit and microduct ends inside all junction boxes with at least 2 inch thick duct seal after cables are installed.
3. Seal vacant conduit and microducts with a manufactured conduit plug and attach detectable pull tape where applicable. Refer to Section 05132.

C. Level the top of junction box and grade with positive drainage away from the box.

D. Conduit in junction box

1. Do not install conduit within 2 inches of junction box corner.
2. Extend PVC conduit 2 inches, HDPE conduit 6 inches, microduct oversheath 6 inches and individual microducts 2 ft beyond the inside wall of the junction box.
3. Align conduit ends by color at each side of the box.
4. Enter conduit through the sides of the junction box and not from the bottom.
5. Place the conduit in the bottom half of the junction box wall at least 3 inches above the floor.

6. Install bushings on all conduits before cable installation according to Section 05132.
7. Refer to City Standard Drawings.

E. Remove concrete sidewalk or other surfaces that require removal by saw cutting.

1. Remove entire section of concrete, joint to joint. Refer to Section 03300.
2. Replace with in-kind materials to match the existing grade, texture, and color of concrete or other surface.

F. Install Engineer-approved ½ inch preformed expansion joint material around entire periphery of ring for junction boxes installed in paved surface.

G. Encase all conduit in approved hand-mix grout where the conduit enters the junction box.

H. Provide a cast-in-place 1 inch thick grout floor, with a 1 inch diameter drain at the low point, for all Type I, II, and III-Polymer Concrete Junction Boxes or provide a box with a prefabricated floor with a 1 inch drain hole. Use grout according to ASTM C 579 and ASTM C 580.

I. Do not stack boxes.

3.3 CONCRETE COLLAR

A. Refer to City Standard Drawings.

B. Concrete AA (AE) – Refer to Section 03300.

C. Install concrete collars around junction boxes in all locations except where junction boxes are in concrete paved surfaces.

3.4 NOT USED

3.5 NOT USED

3.6 RESTORATION

A. Restore all areas damaged during the installation of the junction boxes at no additional cost to the Department.

END OF SECTION

SECTION 05138

BOXES

PART 1 GENERAL

1.1 SECTION INCLUDES

A. Wall, ceiling, and floor outlet boxes.

B. Pull and junction boxes.

1.2 RELATED SECTIONS

A. Section 05139 - Cabinets and Enclosures.

B. Section 05140 - Wiring Devices: Wall plates in finished areas.

1.3 REFERENCES

A. NECA (INST) - NECA Standard of Installation; National Electrical Contractors Association; latest edition.

B. NEMA FB 1 - Fittings, Cast Metal Boxes, and Conduit Bodies for Conduit and Cable Assemblies; National Electrical Manufacturers Association; latest edition.

C. NEMA OS 1 - Sheet-Steel Outlet Boxes, Device Boxes, Covers and Box Supports; National Electrical Manufacturers Association; latest edition.

D. NEMA 250 - Enclosures for Electrical Equipment (1000 Volts Maximum); National Electrical Manufacturers Association; latest edition.

E. NFPA 70 - National Electrical Code; National Fire Protection Association.

1.4 SUBMITTALS

A. See Section 01300 - Administrative Requirements, for submittal procedures.

B. Project Record Documents: Record actual locations and mounting heights of outlet, pull, and junction boxes on project record documents.

1.5 QUALITY ASSURANCE

A. Conform to requirements of NFPA 70.

B. Products: Listed and classified by Underwriters Laboratories, Inc., as meeting their standards for the purpose specified and indicated.

PART 2 PRODUCTS

2.1 OUTLET BOXES

A. Sheet Metal Outlet Boxes: NEMA OS 1, galvanized steel.

1. Luminaire and Equipment Supporting Boxes: Rated for weight of equipment supported; include 1/2 inch male fixture studs where required.

B. Cast Boxes: NEMA FB 1, Type FD, Malleable Iron. Provide gasketed cover by box manufacturer. Provide threaded hubs.

C. Wall Plates for Finished Areas: As specified in Section 05140.

2.2 PULL AND JUNCTION BOXES

A. Sheet Metal Boxes: NEMA OS 1, galvanized steel.

B. Hinged Enclosures: As specified in Section 16139.

C. Surface Mounted Cast Metal Box: NEMA 250, Type 4; flat-flanged, surface mounted junction box:

1. Material: Galvanized cast iron.
2. Cover: Furnish with ground flange, neoprene gasket, and stainless steel cover and screws.

D. In-Ground Cast Metal Box: NEMA 250, Type 6, outside flanged, recessed cover box for flush mounting:

1. Material: Galvanized cast iron.
2. Cover: Smooth cover with neoprene gasket and stainless steel cover screws.
3. Cover Legend: "ELECTRIC".

~~3.~~E. Corrosive environments shall use NEMA type 4X or type 12 boxes of fiberglass or stainless steel construction.

PART 3 EXECUTION

3.1 EXAMINATION

A. Verify locations of floor boxes and outlets in offices and work areas prior to rough-in.

3.2 INSTALLATION

A. Install boxes in accordance with NECA "Standard of Installation."

B. Install in locations as shown on Drawings, and as required for splices, taps, wire pulling, equipment connections, and as required by NFPA 70.

C. Coordinate installation of outlet boxes for equipment connected under Section 05155.

D. Set wall mounted boxes at elevations to accommodate mounting heights specified in section for outlet device.

E. Electrical boxes are shown on Drawings in approximate locations unless dimensioned.

1. Adjust box locations up to 10 feet if required to accommodate intended purpose.

SECTION 05139

CABINETS AND ENCLOSURES

PART 1 GENERAL

1.1 SECTION INCLUDES

A. Hinged cover enclosures.

B. Cabinets.

C. Terminal blocks.

D. Accessories.

1.2 RELATED SECTIONS

A. Section 05070 - Hangers and Supports.

1.3 REFERENCES

A. NECA (INST) - NECA Standard of Installation; National Electrical Contractors Association; latest edition.

B. NEMA 250 - Enclosures for Electrical Equipment (1000 Volts Maximum); National Electrical Manufacturers Association; latest edition.

C. NEMA ICS 4 - Industrial Control and Systems: Terminal Blocks; National Electrical Manufacturers Association; latest edition.

D. NFPA 70 - National Electrical Code; National Fire Protection Association.

1.4 SUBMITTALS

A. See Section 01300 - Administrative Requirements, for submittal procedures.

B. Product Data: Provide manufacturer's standard data for enclosures and cabinets.

C. Manufacturer's Instructions: Indicate application conditions and limitations of use stipulated by product testing agency specified under Quality Assurance. Include instructions for storage, handling, protection, examination, preparation, and installation of product.

1.5 QUALITY ASSURANCE

A. Conform to requirements of NFPA 70.

B. Products: Listed and classified by Underwriters Laboratories, Inc. as meeting their standards for the purpose specified and indicated.

1.6 MAINTENANCE MATERIALS

A. Furnish two of each key.

PART 2 PRODUCTS

2.1 HINGED COVER ENCLOSURES

A. Construction: NEMA 250, Type 4 steel enclosure.

B. Covers: Continuous hinge, held closed by flush latch operable by screwdriver.

C. Provide interior metal back panel for mounting terminal blocks and electrical components; finish with white enamel.

D. Enclosure Finish: Manufacturer's standard enamel.

2.2 CABINETS

A. Boxes: Galvanized steel (NEMA 4).

B. Backpan: Provide metal back pan for mounting terminal blocks. Paint white enamel.

C. Fronts: Steel, flush type with concealed trim clamps, door with concealed hinge, and flush lock keyed to match branch circuit panelboard. Finish with gray baked enamel.

D. Provide metal barriers to form separate compartments wiring of different systems and voltages.

E. Provide concrete housekeeping pad 4" thick ~~accessory feet~~ for free-standing equipment.

2.3 TERMINAL BLOCKS

A. Terminal Blocks: NEMA ICS 4.

B. Power Terminals: Unit construction type with closed back and tubular pressure screw connectors, rated 600 volts.

C. Signal and Control Terminals: Modular construction type, suitable for channel mounting, with tubular pressure screw connectors, rated 600 volts.

D. Provide ground bus terminal block, with each connector bonded to enclosure.

2.4 ACCESSORIES

A. Plastic Raceway: Plastic channel with hinged or snap-on cover.

PART 3 EXECUTION

3.1 INSTALLATION

A. Install in accordance with NECA Standard of Installation.

B. Clearances in accordance to NFPA70E.

C. Install enclosures and boxes plumb. Anchor securely to wall and structural supports at each corner under the provisions of Section 05070.

D. Install cabinet fronts plumb.

E. In locations where splashing may occur due to water leaks, or locations that are otherwise considered damp or wet, cabinets should only be penetrated in bottom to reduce equipment damage caused by ingress of water. If conduits originate from above cabinet or enclosure, they should be routed beside cabinet and brought into bottom by use of wireway, liquidtite, or similar means.

~~D.~~F. In corrosive areas such as wet wells, chlorine rooms, pools, etc., enclosures and cabinets should be of NEMA type 4X or type 12 construction. If fiberglass is used, bond bushings

3.2 CLEANING

A. Clean electrical parts to remove conductive and harmful materials.

B. Remove dirt and debris from enclosure.

C. Clean finishes and repair damage.

END OF SECTION

SECTION 05140

WIRING DEVICES

PART 1 GENERAL

1.1 SECTION INCLUDES

A. Wall switches.

B. Receptacles.

C. Device plates and decorative box covers.

1.2 RELATED SECTIONS

A. Section 05138 - Boxes.

1.3 REFERENCES

A. NECA (INST) - NECA Standard of Installation; National Electrical Contractors Association; latest edition.

B. NEMA WD 1 - General Requirements for Wiring Devices; National Electrical Manufacturers Association; latest edition.

C. NEMA WD 6 - Wiring Device -- Dimensional Requirements; National Electrical Manufacturers Association; latest edition.

D. NFPA 70 - National Electrical Code; National Fire Protection Association.

1.4 SUBMITTALS

A. See Section 01300 - Administrative Requirements, for submittal procedures.

B. Product Data: Provide manufacturer's catalog information showing dimensions, colors, and configurations.

C. Manufacturer's Installation Instructions.

1.5 QUALITY ASSURANCE

A. Conform to requirements of NFPA 70.

B. Manufacturer Qualifications: Company specializing in manufacturing the products specified in this section with minimum three years documented experience.

C. Products: Listed and classified by Underwriters Laboratories, Inc. as meeting their standards for the purpose specified and indicated.

PART 2 PRODUCTS

2.1 WALL SWITCHES

A. Wall Switches: NEMA WD 1, Heavy Duty, AC only general-use snap switch.

E. Connect wiring device grounding terminal to outlet box with bonding jumper.

F. Install decorative plates on switch, receptacle, and blank outlets in finished areas. Include printed label denoting circuit number and panel of origin.

G. Connect wiring devices by wrapping conductor around screw terminal.

H. Use jumbo size plates for outlets installed in masonry walls.

I. Install galvanized steel plates on outlet boxes and junction boxes in unfinished areas, above accessible ceilings, on surface mounted outlets and label.

3.4 FIELD QUALITY CONTROL

A. Perform field inspection, testing, and adjusting in accordance with Section 01400.

B. Inspect each wiring device for defects.

C. Operate each wall switch with circuit energized and verify proper operation.

D. Verify that each receptacle device is energized.

E. Test each receptacle device for proper polarity. Indicate that voltage drops are within limits required by NFPA 70 by means of voltage drop load testing at each receptacle location and document tested values. Test documents shall be furnished to City Engineer or designee at final inspection.

F. Test each GFCI receptacle device for proper operation.

3.5 ADJUSTING

A. Adjust devices and wall plates to be flush and level.

3.6 CLEANING

A. Clean exposed surfaces to remove splatters and restore finish.

END OF SECTION

SECTION 05155

EQUIPMENT WIRING

PART 1 GENERAL

1.1 SECTION INCLUDES

A. Electrical connections to equipment.

1.2 RELATED SECTIONS

A. Section 05131 - Conduit.

B. Section 05123 - Building Wire and Cable.

C. Section 05138 - Boxes.

D. Section 05140 - Wiring Devices.

1.3 REFERENCES

A. NEMA WD 1 - General Requirements for Wiring Devices; National Electrical Manufacturers Association; latest edition.

B. NEMA WD 6 - Wiring Devices - Dimensional Requirements; National Electrical Manufacturers Association; latest edition.

C. NFPA 70 - National Electrical Code; National Fire Protection Association.

1.4 SUBMITTALS

A. See Section 01300 - Administrative Requirements, for submittal procedures.

B. Product Data: Provide wiring device manufacturer’s catalog information showing dimensions, configurations, and construction.

C. Manufacturer's Instructions: Indicate application conditions and limitations of use stipulated by product testing agency. Include instructions for storage, handling, protection, examination, preparation, and installation of product.

1.5 QUALITY ASSURANCE

A. Conform to requirements of NFPA 70.

B. Products: Listed and classified by Underwriters Laboratories, Inc. as meeting their standards for the purpose specified and indicated.

1.6 COORDINATION

A. Obtain and review shop drawings, product data, manufacturer's wiring diagrams, and manufacturer's instructions for equipment furnished under other sections.

B. Determine connection locations and requirements.

E. Provide cord and cap where field-supplied attachment plug is required.

F. Install suitable strain-relief clamps and fittings for cord connections at outlet boxes and equipment connection boxes.

G. Install disconnect switches, controllers, control stations, and control devices to complete equipment wiring requirements.

H. Install terminal block jumpers to complete equipment wiring requirements.

I. Install interconnecting conduit and wiring between devices and equipment to complete equipment wiring requirements.

~~I.~~J. Tighten electrical connections to manufacturer recommended torque values. For all busbars and wires 4AWG or larger, document applied torque values for each fastener and lug screw and apply a witness mark of anti-sabotage lacquer to each. Furnish torque value sheet to City Engineer or designee at final inspection.

END OF SECTION

SECTION 05423

ENCLOSED MOTOR CONTROLLERS

PART 1 GENERAL

1.1 SECTION INCLUDES

A. Manual motor controllers.

B. Magnetic motor controllers.

C. Automatic Controllers

D. Combination magnetic motor controllers and disconnects.

E. Soft Start

F. SPD – Surge Protection Device

1.2 RELATED SECTIONS

A. Section 05070 - Hangers and Supports.

B. Section 05075 - Electrical Identification: Engraved nameplates.

C. Section 05425-Variable Frequency Controller

D. Section 05491 - Fuses.

1.3 REFERENCES

A. NEMA ICS 7.1 - Safety Standards for Construction and Guide for Selection, Installation, and Operation of Adjustable Speed Drive Systems; National Electrical Manufacturers Association; latest edition.

B. NEMA ICS 7 - Industrial Control and Systems: Adjustable Speed Drives; National Electrical Manufacturers Association; latest edition.

C. NEMA 250 - Enclosures for Electrical Equipment (1000 Volts Maximum); National Electrical Manufacturers Association; latest edition.

D. NECA (INST) - NECA Standard of Installation; National Electrical Contractors Association; latest edition.

E. NEMA AB 1 - Molded Case Circuit Breakers and Molded Case Switches; National Electrical Manufacturers Association; latest edition.

F. NEMA ICS 2 - Industrial Control and Systems: Controllers, Contactors, and Overload Relays, Rated Not More Than 2000 Volts AC or 750 Volts DC; National Electrical Manufacturers Association; latest edition.

G. NEMA ICS 5 - Industrial Control and Systems: Control Circuit and Pilot Devices; National Electrical Manufacturers Association; latest edition.

H. NEMA ICS 6 - Industrial Control and Systems: Enclosures; National Electrical Manufacturers Association; latest edition.

I. NEMA KS 1 - Enclosed and Miscellaneous Distribution Equipment Switches (600 Volts Maximum); National Electrical Manufacturers Association; latest edition.

J. NETA STD ATS - Acceptance Testing Specifications for Electrical Power Distribution Equipment and Systems; International Electrical Testing Association; latest edition.

K. NFPA 70 - National Electrical Code; National Fire Protection Association.

1.4 SUBMITTALS

A. See Section 01300 - Administrative Requirements, for submittal procedures.

B. Product Data: Provide catalog sheets showing voltage, controller size, ratings and size of switching/overcurrent protective devices, short circuit ratings, dimensions, enclosure details.

C. Test Reports: Indicate field test and inspection procedures and test results.

D. Manufacturer's Instructions: Indicate application conditions and limitations of use stipulated by testing agency. Include instructions for storage, handling, protection, examination, preparation, and installation of product.

E. Maintenance Data: Replacement parts list for controllers.

1.5 QUALITY ASSURANCE

A. Conform to requirements of NFPA 70.

B. Manufacturer Qualifications: Company specializing in manufacturing the products specified in this section with minimum three years documented experience and with service facilities within 100 miles of Project.

C. Products: Listed and classified by Underwriters Laboratories, Inc. as meeting their standards for the purpose specified and indicated.

PART 2 PRODUCTS

2.1 MANUFACTURERS

A. Weg SSW07 series or equal

~~A.~~B. Substitutions: See Section 01600 - Product Requirements.

2.2 MANUAL CONTROLLERS

A. Manual Motor Controllers: NEMA ICS 2, AC general-purpose, Class A, manually operated, full-voltage controller with overload element, red pilot light, NO auxiliary contact, and push button operator.

B. Fractional Horsepower Manual Controllers: NEMA ICS 2, AC general-purpose, Class A, manually operated, full-voltage controller for fractional horsepower induction motors, with thermal overload unit, red pilot light, and key operator.

C. Motor Starting Switches: NEMA ICS 2, AC general-purpose Class A manually operated, full-voltage controller for fractional horsepower induction motors, without thermal overload unit, with red pilot light and key operator.

D. Enclosures: NEMA ICS 6, NEMA Type4.

2.3 AUTOMATIC CONTROLLERS

A. Magnetic Motor Controllers: NEMA ICS 2, AC general-purpose Class A magnetic controller for induction motors rated in horsepower, with motor circuit protector.

B. Reversing Controllers: Include electrical interlock and integral time delay transition between FORWARD and REVERSE rotation.

C. Two-Speed Controllers: Include integral time delay transition between FAST and SLOW speeds.

D. Coil Operating Voltage: 120 volts, 60 Hertz.

E. Overload Relays: NEMA ICS 2; bimetal.

F. Motor Circuit Protector: NEMA AB 1, circuit breakers with integral instantaneous magnetic trip in each pole. All controllers shall include a three phase motor protector; Motor Saver Model 777.

G. Enclosures: NEMA ICS 6, NEMA Type 4.

H. SPD – An appropriate Surge Protection Device necessary to limit transient overvoltage's of atmospheric origin and divert current waves to ground.

2.4 ACCESSORIES

A. Auxiliary Contacts: NEMA ICS 2, 2 normally open contacts in addition to seal-in contact.

B. Cover Mounted Pilot Devices: NEMA ICS 5, standard duty oil-tight type.

C. Pilot Device Contacts: NEMA ICS 5, Form Z, rated A150.

D. Pushbuttons: Unguarded type.

E. Indicating Lights: LED.

F. Selector Switches: Rotary type.

G. Relays: NEMA ICS 2.

H. Control Power Transformers: 120 volt secondary, primary as required, in each motor starter. Provide fused primary, secondary, and bond unfused leg of secondary to enclosure.

I. Remote HMI: Furnish and install remote human machine interface panel for RVSS on panel door near pushbuttons and switches.

~~H.~~

SECTION 05425

VARIABLE FREQUENCY CONTROLLERS

PART 1 GENERAL

1.1 SECTION INCLUDES

A. Variable frequency controllers.

1.2 RELATED SECTIONS

A. Section 05075 - Electrical Identification: Engraved nameplates.

B. Section 05491 - Fuses.

1.3 REFERENCES

A. NEMA ICS 7.1 - Safety Standards for Construction and Guide for Selection, Installation, and Operation of Adjustable Speed Drive Systems; National Electrical Manufacturers Association; latest edition.

B. NEMA ICS 7 - Industrial Control and Systems: Adjustable Speed Drives; National Electrical Manufacturers Association; latest edition.

C. NEMA 250 - Enclosures for Electrical Equipment (1000 Volts Maximum); National Electrical Manufacturers Association; latest edition.

D. NETA STD ATS - Acceptance Testing Specifications for Electrical Power Distribution Equipment and Systems; International Electrical Testing Association; latest edition.

E. NFPA 70 - National Electrical Code; National Fire Protection Association.

1.4 SUBMITTALS

A. See Section 01300 - Administrative Requirements, for submittal procedures.

B. Product Data: Provide catalog sheets showing voltage, controller size, ratings and size of switching and overcurrent protective devices, short circuit ratings, dimensions, and enclosure details.

C. Shop Drawings: Indicate front and side views of enclosures with overall dimensions and weights shown; conduit entrance locations and requirements; and nameplate legends.

D. Test Reports: Indicate field test and inspection procedures and test results.

E. Manufacturer's Instructions: Indicate application conditions and limitations of use stipulated by testing agency. Include instructions for storage, handling, protection, examination, preparation, and installation of product.

F. Manufacturer's Field Reports: Indicate start-up inspection findings.

G. Operation Data: NEMA ICS 7.1. Include instructions for starting and operating controllers, and describe operating limits that may result in hazardous or unsafe conditions.

H. Maintenance Data: NEMA ICS 7.1. Include routine preventive maintenance schedule.

1.5 QUALITY ASSURANCE

A. Conform to requirements of NFPA 70.

B. Manufacturer Qualifications: Company specializing in manufacturing the products specified in this section with minimum three years documented experience and with service facilities within 100 miles of Project.

C. Products: Listed and classified by Underwriters Laboratories, Inc. as meeting their standards for the purpose specified and indicated.

D. Conform to requirements of IEEE 519-1992.

1.6 DELIVERY, STORAGE, AND HANDLING

A. Store in a clean, dry space. Maintain factory wrapping or provide an additional heavy canvas or heavy plastic cover to protect units from dirt, water, construction debris, and traffic.

B. Handle in accordance with manufacturer's written instructions. Lift only with lugs provided for the purpose. Handle carefully to avoid damage to components, enclosure, and finish.

1.7 MAINTENANCE SERVICE

A. Provide service and maintenance of controller during the warranty period.

PART 2 PRODUCTS

2.1 MANUFACTURERS

A. Schneider Altivar 600 series or equal.

~~A.~~B. Substitutions: See Section 01600 - Product Requirements.

2.2 DESCRIPTION

A. Variable Frequency Controllers: Enclosed controllers suitable for operating the indicated loads, in conformance with requirements of NEMA ICS 7. Select unspecified features and options in accordance with NEMA ICS 3.1.

1. Employ microprocessor-based inverter logic isolated from power circuits.
2. Design for ability to operate controller with motor disconnected from output.
3. Harmonies Filter to meet IEEE 519 Levels

B. Enclosures: NEMA 250, Type 4, suitable for equipment application in places regularly open to the public.

C. Finish: Manufacturer's standard enamel.

2.3 OPERATING REQUIREMENTS

A. Displacement Power Factor: Between 1.0 and 0.95, lagging, over entire range of operating speed and load.

B. Operating Ambient: 0 degrees C to 40 degrees C.

C. Minimum Efficiency at Full Load: as per manufacturer's standard design.

D. Time to Stop: as per manufacturer's recommendations.

E. Volts Per Hertz Adjustment: Plus or minus 10 percent.

F. Current Limit Adjustment: 60 to 110 percent of rated.

G. Acceleration Rate Adjustment: 0.5 to 30 seconds.

H. Deceleration Rate Adjustment: 1 to 30 seconds.

I. Input Signal: 4 to 20 mA.

2.4 COMPONENTS

A. Display: Provide integral digital display to indicate output voltage, output frequency, and output current.

B. Status Indicators: Separate indicators for over-current, over-voltage, ground fault, over-temperature, and input power ON.

C. Furnish HAND-OFF-AUTOMATIC selector switch and manual speed control.

D. Include under-voltage release.

E. Control Power Source: If separate circuit is used, a separate indicating pilot light shall be equipped on door front to indicate if control power is present. Light shall be labeled 'control power', and shall list circuit and panel of origin. ~~Control Power Source: Separate Circuit.~~

F. Door Interlocks: Furnish mechanical means to prevent opening of equipment with power connected, or to disconnect power if door is opened; include means for defeating interlock by qualified persons.

G. Safety Interlocks: Furnish terminals for remote contact to inhibit starting under both manual and automatic mode.

H. Control Interlocks: Furnish terminals for remote contact to allow starting in automatic mode.

I. Manual Bypass: Furnish contactor, motor running overload protection, and short circuit protection for full voltage, non-reversing operation of the motor. Include isolation switch to allow maintenance of inverter during bypass operation.

~~J. Emergency Stop: Use dynamic brakes for emergency stop function.~~

~~K. Disconnecting Means: Include integral fused disconnect switch on the line side of each controller.~~

~~L.~~J. Wiring Terminations: Match conductor materials and sizes indicated.

2.5 SOURCE QUALITY CONTROL

A. Shop inspect and perform standard productions tests for each controller.

B. Make completed controller available for inspection at manufacturer's factory prior to packaging for shipment. Notify Owner at least 7 days before inspection is allowed.

C. Allow witnessing of factory inspections and tests at manufacturer's test facility. Notify Owner at least 7 days before inspections and tests are scheduled.

PART 3 EXECUTION

3.1 EXAMINATION

A. Verify that surface is suitable for controller installation.

B. Do not install controller until building environment can be maintained within the service conditions required by the manufacturer.

C. Verify that field measurements are as indicated on shop drawings.

3.2 INSTALLATION

A. Install in accordance with NEMA ICS 7.1 and manufacturer's instructions.

B. Tighten accessible connections and mechanical fasteners after placing controller.

C. Provide fuses in fusible switches; refer to Section 05491 for product requirements.

D. Select and install overload heater elements in motor controllers to match installed motor characteristics.

E. Provide engraved plastic nameplates; refer to Section 05075 for product requirements and location.

F. Neatly type label inside each motor controller door identifying motor served, nameplate horsepower, full load amperes, code letter, service factor, and voltage/phase rating. Place in clear plastic holder.

~~F.~~G. VFD shall be located in climate controlled conditions. If room heating and air conditioning are not present, cabinet heating (for humidity control) and air conditioning shall be provided.

3.3 FIELD QUALITY CONTROL

A. Perform field inspection and testing in accordance with Section 01400.

B. Inspect and test in accordance with NETA STD ATS, except Section 4.

C. Perform inspections and tests listed in NETA STD ATS, Section 7.16.2.

3.4 MANUFACTURER'S FIELD SERVICES

A. Provide the service of the manufacturer's field representative to prepare and start controllers.

3.5 ADJUSTING

A. Make final adjustments to installed controller to assure proper operation of load system. Obtain performance requirements from installer of driven loads.

SECTION 05443

PANELBOARDS

PART 1 GENERAL

1.1 SECTION INCLUDES

A. Distribution panel boards.

B. Branch circuit panel boards.

C. Load centers.

1.2 RELATED SECTIONS

A. Section 05075 - Electrical Identification.

1.3 REFERENCES

A. NECA (INST) - NECA Standard of Installation; National Electrical Contractors Association; latest edition.

B. NEMA AB 1 - Molded Case Circuit Breakers and Molded Case Switches; National Electrical Manufacturers Association; latest edition.

C. NEMA ICS 2 - Industrial Control and Systems: Controllers, Contactors, and Overload Relays, Rated Not More Than 2000 Volts AC or 750 Volts DC; National Electrical Manufacturers Association; latest edition.

D. NEMA KS 1 - Enclosed and Miscellaneous Distribution Equipment Switches (600 Volts Maximum); National Electrical Manufacturers Association; latest edition.

E. NEMA PB 1 - Panel boards; National Electrical Manufacturers Association; latest edition.

F. NEMA PB 1.1 - General Instructions for Proper Installation, Operation and Maintenance of Panel boards Rated 600 Volts or Less; National Electrical Manufacturers Association; latest edition.

G. NETA STD ATS - Acceptance Testing Specifications for Electrical Power Distribution Equipment and Systems; International Electrical Testing Association; latest edition.

H. NFPA 70 - National Electrical Code; National Fire Protection Association.

1.4 SUBMITTALS

A. See Section 01300 - Administrative Requirements, for submittal procedures.

B. Shop Drawings: Indicate outline and support point dimensions, voltage, main bus ampacity, integrated short circuit ampere rating, circuit breaker and fusible switch arrangement and sizes.

C. Manufacturer's Installation Instructions: Indicate application conditions and limitations of use stipulated by product testing agency. Include instructions for storage, handling, protection, examination, preparation, and installation of product.

PART 3 EXECUTION

3.1 INSTALLATION

A. Install panel boards in accordance with NEMA PB 1.1 and the NECA Standard of Installation.

B. Install panel boards plumb. Install recessed panel boards flush with wall finishes.

C. Height: 6 feet to top of panel board; install panel boards taller than 6 feet with bottom no more than 4 inches above floor.

D. Provide filler plates for unused spaces in panel boards.

E. Provide typed circuit directory for each branch circuit panel board. Revise directory to reflect circuiting changes required to balance phase loads. Circuit location shall describe area served in a uniquely identifiable manner such as “NE Hallway lighting” or “Mezzanine Receptacles” and shall not be ambiguous or repetitive descriptions such as “Lighting” or “Receptacle”.~~be uniquely and adequately descriptive.~~

F. Provide engraved plastic nameplates under the provisions of Section 05075.

G. Provide spare conduits out of each recessed panel board to an accessible location above ceiling. Identify each as SPARE.

H. Ground and bond panel board enclosure as required by NFPA70.

3.2 FIELD QUALITY CONTROL

A. Perform field inspection and testing in accordance with Section 01400.

B. Inspect and test in accordance with NETA STD ATS, except Section 4.

C. Perform inspections and tests listed in NETA STD ATS, Section 7.4 for switches, Section 7.5 for circuit breakers.

3.3 ADJUSTING

A. Measure steady state load currents at each panel board feeder; rearrange circuits in the panel board to balance the phase loads to within 20 percent of each other. Maintain proper phasing for multi-wire branch circuits.

END OF SECTION

SECTION 05510

INTERIOR LUMINAIRES

PART 1 GENERAL

1.1 SECTION INCLUDES

A. Interior luminaries for buildings to include:

1. Interior luminaires and accessories.
2. Ballasts.
3. Lamps.
4. Luminaire accessories.

1.2 REFERENCES

A. ANSI C78.379 - American National Standard for Electric Lamps -- Reflector Lamps -- Classification of Beam Patterns; latest edition.

~~B. ANSI C82.1 - American National Standard Specifications for Fluorescent Lamp Ballasts; latest edition.~~

~~C.~~B. NEMA WD 6 - Wiring Devices - Dimensional Requirements; National Electrical Manufacturers Association; latest edition.

~~D.~~C. NFPA 70 - National Electrical Code; National Fire Protection Association.

~~E.~~D. NFPA 101 - Code for Safety to Life from Fire in Buildings and Structures; National Fire Protection Association.

1.3 SUBMITTALS

A. See Section 01300 - Administrative Requirements, for submittal procedures.

B. Shop Drawings: Indicate dimensions and components for each luminaire that is not a standard product of the manufacturer.

C. Product Data: Provide dimensions, ratings, and performance data.

D. Manufacturer's Installation Instructions: Indicate application conditions and limitations of use stipulated by product testing agency specified under Quality Assurance. Include instructions for storage, handling, protection, examination, preparation, and installation of product.

E. Operation and Maintenance Data: Instructions for each product.

1.4 QUALITY ASSURANCE

A. Conform to requirements of NFPA 70 and NFPA 101.

B. Manufacturer Qualifications: Company specializing in manufacturing the products specified in this section with minimum three years documented experience.

C. Products: Listed and classified by Underwriters Laboratories, Inc. as meeting their standards for the purpose specified and indicated.

1.5 EXTRA MATERIALS

A. See Section 01600 - Product Requirements, for additional provisions.

B. Furnish one replacement lamps for each lamp type.

C. Furnish one of each ballast type.

PART 2 PRODUCTS

2.1 LUMINAIRES

A. Furnish products as indicated in Schedule included on the Drawings.

B. Substitutions: See Section 01600 - Product Requirements.

~~2.2 BALLASTS AND CONTROL UNITS~~

~~A. Fluorescent Ballasts: ANSI C82.1, high power factor type electronic ballast, suitable for lamps specified.~~

~~1. Voltage: 120 volts.~~

~~2. Certify fluorescent ballast design and construction by Certified Ballast Manufacturers, Inc.~~

~~2.3~~2.2 LAMPS

A. Lamp Types: As specified for each luminaire.

PART 3 EXECUTION

3.1 INSTALLATION

A. Install suspended luminaires using pendants supported from swivel hangers. Provide pendant length required to suspend luminaire at indicated height.

B. Install surface mounted luminaires plumb and adjust to align with building lines and with each other. Secure to prevent movement.

C. Install wall mounted luminaires at height as indicated on Drawings.

D. Install accessories furnished with each luminaire.

E. Connect luminaires to branch circuit outlets provided under Section 05138 using flexible conduit.

F. Make wiring connections to branch circuit using building wire with insulation suitable for temperature conditions within luminaire.

G. Bond products and metal accessories to branch circuit equipment grounding conductor.

H. Install specified lamps in each emergency lighting unit.

SECTION 05520

EXTERIOR LUMINAIRES

PART 1 GENERAL

1.1 SECTION INCLUDES

A. Exterior luminaires for buildings, such as pump houses, to include:

1. Exterior luminaires and accessories.
2. Ballasts.
3. Lamps.
4. Luminaire accessories.

1.2 REFERENCES

A. ANSI C78.379 - American National Standard for Electric Lamps -- Reflector Lamps -- Classification of Beam Patterns; latest edition.

~~B. ANSI C82.1 - American National Standard Specifications for Fluorescent Lamp Ballasts; latest edition.~~

~~C.~~B. ANSI C82.4 - American National Standard for Ballasts for High-Intensity-Discharge and Low Pressure Sodium Lamps (Multiple-Supply Type); latest edition.

~~D.~~C. NFPA 70 - National Electrical Code; National Fire Protection Association.

1.3 SUBMITTALS

A. See Section 01300 - Administrative Requirements, for submittal procedures.

B. Shop Drawings: Indicate dimensions and components for each luminaire which is not a standard product of the manufacturer.

C. Product Data: Provide dimensions, ratings, and performance data.

D. Manufacturer's Installation Instructions: Indicate application conditions and limitations of use stipulated by product testing agency. Include instructions for storage, handling, protection, examination, preparation, installation, and starting of product.

E. Maintenance Data: For each luminaire.

1.4 QUALITY ASSURANCE

A. Conform to requirements of NFPA 70.

B. Manufacturer Qualifications: Company specializing in manufacturing the products specified in this section with minimum three years documented experience.

C. Electrical Components: Listed and classified by Underwriters Laboratories, Inc. as meeting their standards for the purpose specified and indicated.

1.5 EXTRA MATERIALS

A. See Section 01600 - Product Requirements, for additional provisions.

B. Furnish one of each type and wattage lamp installed.

PART 2 PRODUCTS

2.1 LUMINAIRES

A. Furnish products as indicated in Schedule included on the Drawings.

B. Substitutions: See Section 01600 - Product Requirements.

2.2 BALLASTS

~~A. Fluorescent Ballasts: ANSI C82.1, high power factor type electronic ballast, suitable for lamps specified.~~

~~1. Provide low-temperature ballast suitable for lamps specified.~~

~~2. Voltage: 120 volts.~~

~~3. Certify fluorescent ballast design and construction by Certified Ballast Manufacturers, Inc.~~

~~4. Substitutions: See Section 01600 - Product Requirements.~~

~~B. High Intensity Discharge (HID) Pulse Start Ballasts: ANSI C82.4, mercury vapor lamp ballast, suitable for lamp specified.~~

~~1. Voltage: 120 volts.~~

~~C.~~A. LED

1. Voltage: 120 volts.

2.3 LAMPS

A. Lamp Types: As specified for each luminaire.

PART 3 EXECUTION

3.1 INSTALLATION

A. Install luminaires as indicated on the drawings.

B. Install surface mounted luminaires plumb and adjust to align with building lines and with each other. Secure to prevent movement.

C. Install accessories furnished with each luminaire.

D. Connect luminaires to branch circuit outlets provided under Section 05138.

E. Make wiring connections to branch circuit using building wire with insulation suitable for temperature conditions within luminaire.

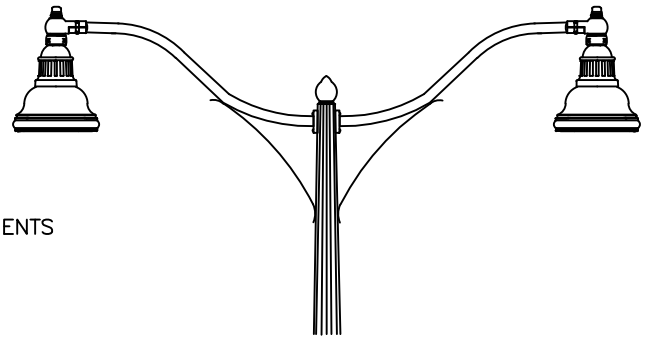

SEE GENERAL NOTES FOR ADDITIONAL REQUIREMENTS

SHOWN WITH DOUBLE FIXTURE

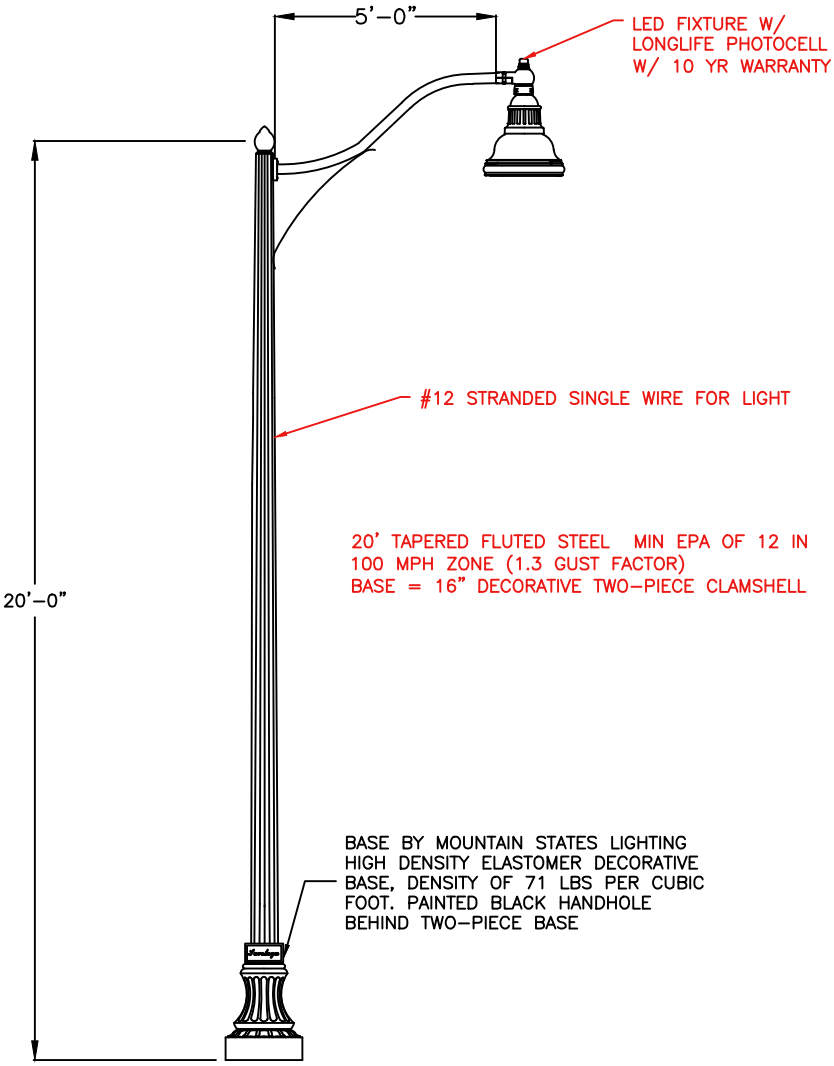

4 BOLTS AT 90 DEGREES 3/4" DIA x 18" LONG x 3" HOOK BOLTS TO HAVE A 3.5" PROJECTION OUT OF THE CONCRETE. BOLTS TO GE GALVANIZED

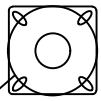

ANCHOR BASE DETAIL 12" BOLT CIRCLE 7/8" x 1" HOLES TO ACCOMMODATE UP TO 3/4" DIA BOLT

ANCHOR BASE

FINISH: BLACK

20' COLLECTOR STREET LIGHT

DATE:	AUGUST 2017
DRAWING NAME:	LP-2A
DRAWN BY:	ETL
CHECKED:	
APPROVED:	

REVISIONS

REVISION	DATE	BY	COMMENTS
1	08-31-17	RM	ADDED CALLOUTS AND NOTES

SARATOGA SPRINGS CITY

1307 N. COMMERCE DR.
#200, SARATOGA SPRINGS,
UT 84045
PHONE: 801-766-9793
FAX: 801-766-9794

STANDARD DETAILS

STREET LIGHTS

LP-2A

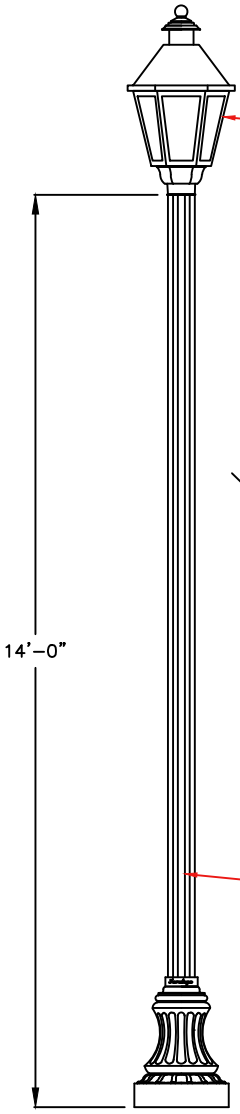

LED FIXTURE W/
LONGLIFE PHOTOCELL
W/ 10 YR WARRANTY

POLE SPECIFICATIONS:

POLE HEIGHT: 14' EXTRUDED ALUMINUM TOTAL
POLE: 5" O.D. THICKNESS: .250"
EPA: MIN 20 IN 80 MPH ZONE (1.3 GUST FACTOR)
BASE = 16" DECORATIVE TWO–PIECE CLAMSHELL

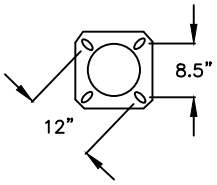

ANCHOR BASE DETAIL
12" BOLT CIRCLE
ANCHOR BOLTS: 3/4" x 18"
4 BOLTS AT 90° $\frac{3}{4}$" DIA. X 18" LONG X 3" HOOK BOLTS TO HAVE A 3 $\frac{1}{2}$" PROJECTION OUT OF THE CONCRETE. BOLTS TO BE GE GALVANIZED.

#12 STRANDED SINGLE
WIRE FOR LIGHT

FINISH;
BLACK

14' LOCAL STREET LIGHT

DATE: AUGUST 2017	
DRAWING NAME: LP-1A	
DRAWN BY: ETL	
CHECKED:	APPROVED:

REVISIONS

REVISION	DATE	BY	COMMENTS
1	08-31-17	RM	ADDED CALLOUTS AND EDITED/ADDED NOTES

SARATOGA SPRINGS CITY

1307 N. COMMERCE DR.
#200, SARATOGA SPRINGS,
UT 84045
PHONE: 801-766-9793
FAX: 801-766-9794

STANDARD DETAILS

STREET LIGHTS

LP-1A

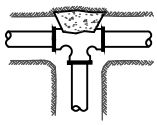

TEE

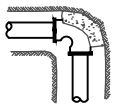

90° ELBOW

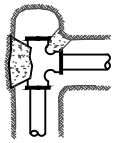

TEE WITH CAP

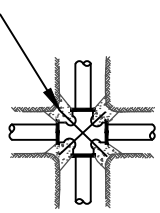

CROSS

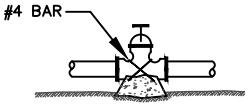

VALVE

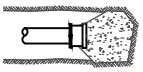

CAP OR PLUG

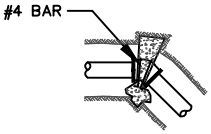

ELBOW

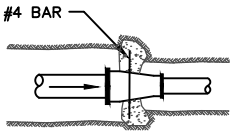

REDUCER

SAFE BEARING LOADS

SOIL TYPE	SAFE BEARING LOAD (lb/ft²)
SAND	1000
SAND & GRAVEL	1500
SAND & GRAVEL CEMENTED WITH CLAY	2000
SHALE	5000

SAFE BEARING LOAD FORMULA

THRUST BLOCK AREA AGAINST TRENCH WALL (SQUARE FEET) = THRUST ON FITTING / SAFE BEARING LOAD OF SOIL

NOTES:

1. REINFORCING BARS REQUIRED FOR HANGING THRUST BLOCKS AND SHALL BE EPOXY COATED.

2. RESIDENT PROJECT ENGINEER WILL CALCULATE QUANTITIES OF CONCRETE REQ'D AND SPECIFY PLACEMENT METHODS & REQUIREMENTS; WHICH SHALL BE APPROVED BY CITY ENGINEER.

3. CONCRETE SHALL BE 4000 PSI MIN.

4. POUR CONCRETE AGAINST UNDISTURBED SOIL.

THRUST ON FITTINGS

POUNDS @ 1 POUND PER SQUARE INCH OF WATER PRESSURE*

PIPE SIZE	TEES/ PLUGS	90° BENDS	45° BENDS	22.5° BENDS
4"	18.5	26.1	14.2	7.2
6"	38	53.7	29.1	14.7
8"	65.8	93	50.4	25.5
10"	107.5	152	82.4	41.7
12"	153.1	216.4	117.2	59.4
14"	215.5	304.7	164.9	84
16"	281.5	398.1	215.4	109.8
18"	356.3	503.8	272.6	139
20"	439.8	622	336.6	171.6
24"	633.3	895.6	484.7	247.1

*MULTIPLY THRUST BY MAXIMUM WATER PRESSURE

*PIPE SIZES LARGER THAN 24" SHALL BE THRUST BLOCKED AS PER ENGINEER RECOMMENDATION

THRUST BLOCK AREA AGAINST TRENCH WALL (SQUARE FEET)

ASSUMING SAND AND MAX PRESSURE OF 150 PSI
SIZE MAY BE REDUCED WITH AN ENGINEERED SUBMITTAL AND AS APPROVED BY THE CITY ENGINEER

PIPE SIZE	TEES/ PLUGS	90° BENDS	45° BENDS	22.5° BENDS
4"	2.8	3.9	2.1	1.1
6"	5.7	8.1	4.4	2.2
8"	9.9	14.0	7.6	3.8
10"	16.1	22.8	12.4	6.3
12"	23.0	32.5	17.6	8.9
14"	32.3	45.7	24.7	12.6
16"	42.2	59.7	32.3	16.5
18"	53.4	75.6	40.9	20.9
20"	66.0	93.3	50.5	25.7
24"	95.0	134.3	72.7	37.1

CONCRETE THRUST BLOCKS

DATE: AUGUST 2017

DRAWING NAME: DW-2

DRAWN BY: ETL

CHECKED: APPROVED:

REVISIONS

REVISION	DATE	BY	COMMENTS

SARATOGA SPRINGS CITY

1307 N. COMMERCE DR. #200, SARATOGA SPRINGS, UT 84045
PHONE: 801-766-9793
FAX: 801-766-9794

STANDARD DETAILS

DRINKING WATER

DW-2

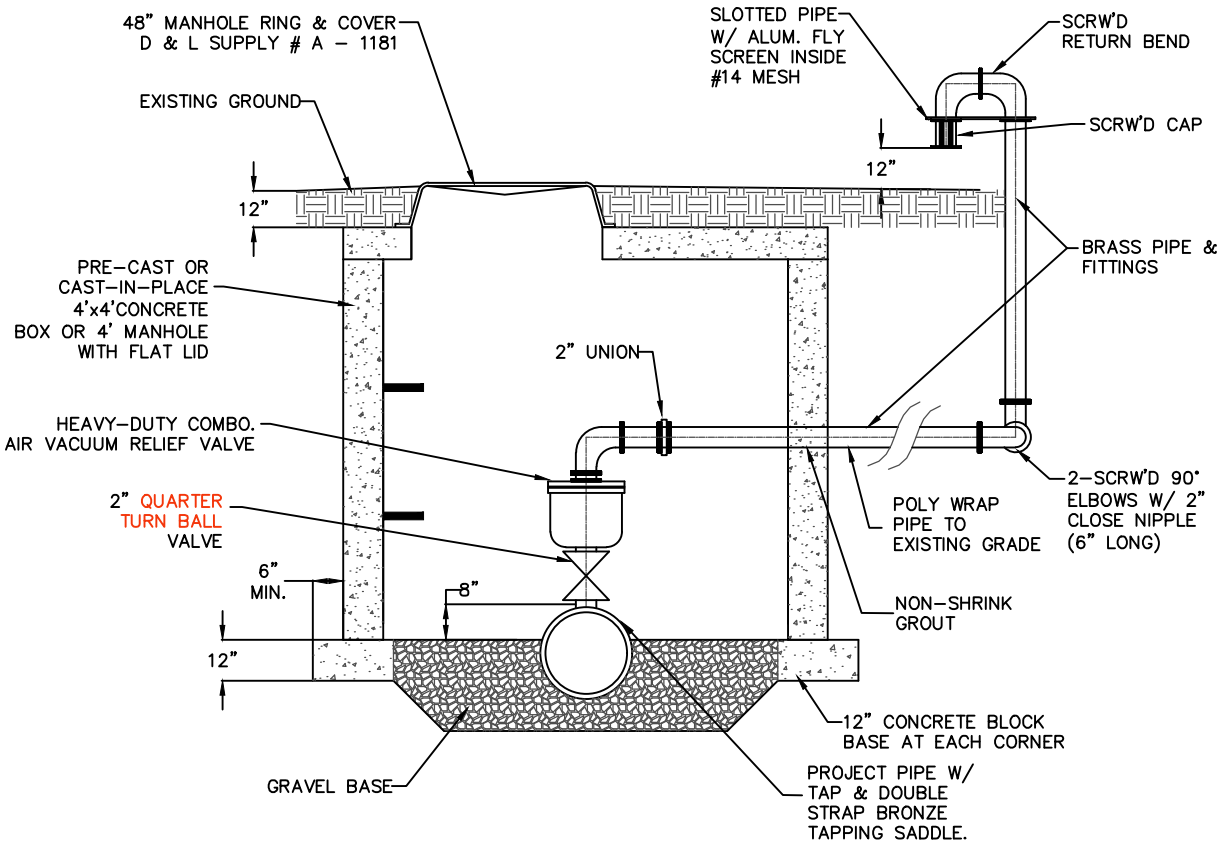

NOTE:

1. SIZE OF AIR–VACUUM RELIEF VALVE & PIPING SHALL BE AS DETERMINED BY PROJECT ENGINEER; AND APPROVED BY CITY ENGINEER.
2. LOCATE RISER IN LANDSCAPED AREA BEHIND CURB & GUTTER OR APPROX. 2 FT. FROM R/W LINE, AS DIRECTED BY CITY ENGINEER.
3. PROVIDE BOLLARDS OR OTHER PROTECTION FOR RISER IF AND AS DIRECTED BY CITY INSPECTOR.

AIR VACUUM RELIEF VALVE

DATE: AUGUST 2017

DRAWING NAME: DW-12

DRAWN BY: ETL

CHECKED: APPROVED:

REVISIONS

REVISION	DATE	BY	COMMENTS
1	08-31-17	RM	EDITED NOTE

SARATOGA SPRINGS CITY

1307 N. COMMERCE DR.
#200, SARATOGA SPRINGS,
UT 84045
PHONE: 801-766-9793
FAX: 801-766-9794

STANDARD DETAILS

DRINKING WATER

DW-12

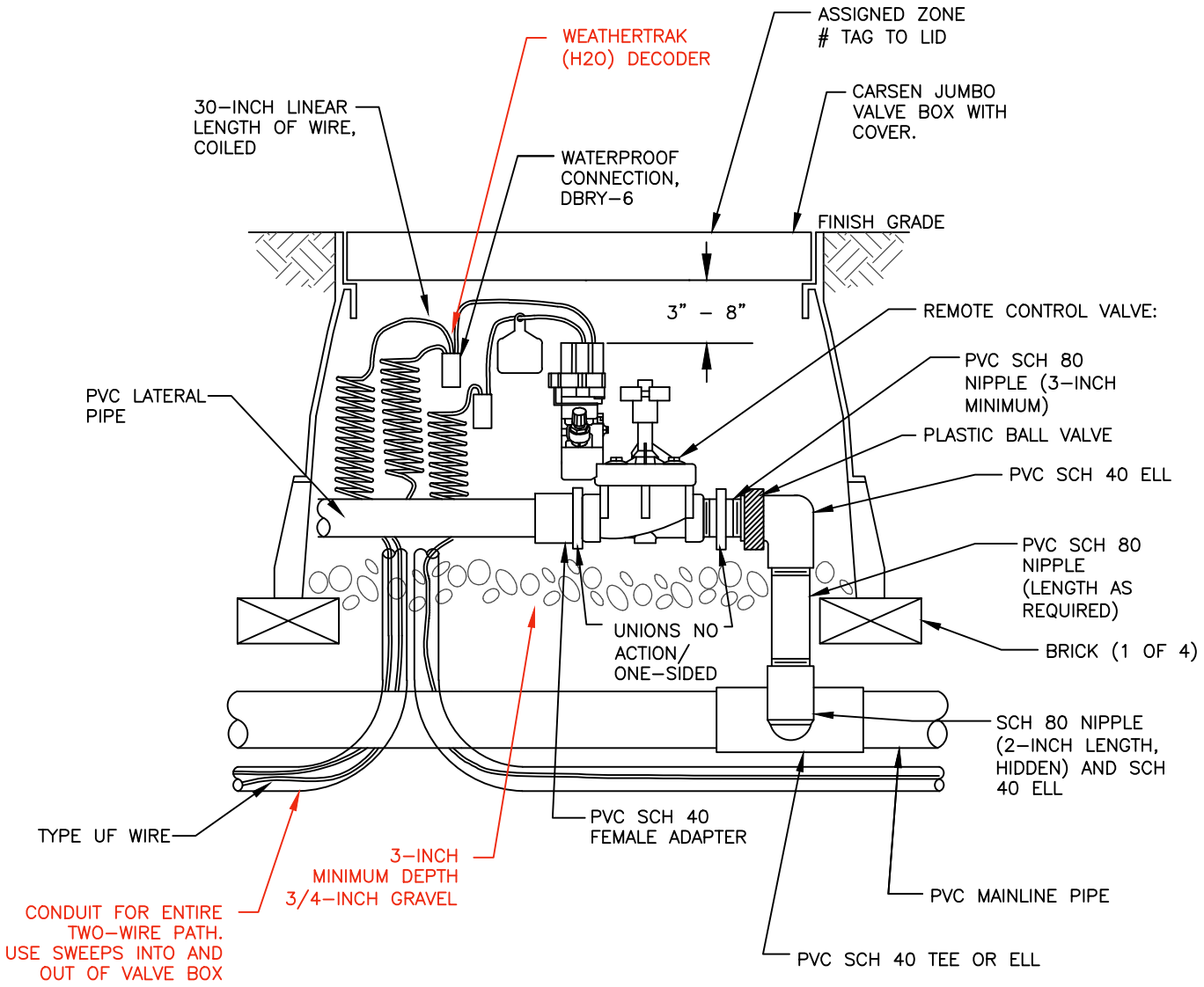

NOTES:

1. NO MALE ADAPTORS.
2. 1 VALVE PER BOX.
3. PLACE 3 FEET OF EXTRA WIRE IN EVERY VALVE BOX FOR EASIER SERVICING

SPRINKLER SYSTEM REMOTE CONTROL VALVE

DATE: AUGUST 2017

DRAWING NAME: LS-3

DRAWN BY: ETL

CHECKED: APPROVED:

REVISIONS

REVISION	DATE	BY	COMMENTS
1	08-31-17	RM	EDITED NOTES AND CALLOUTS

SARATOGA SPRINGS CITY

1307 N. COMMERCE DR. #200, SARATOGA SPRINGS, UT 84045
PHONE: 801-766-9793
FAX: 801-766-9794

STANDARD DETAILS

LANDSCAPING

LS-3

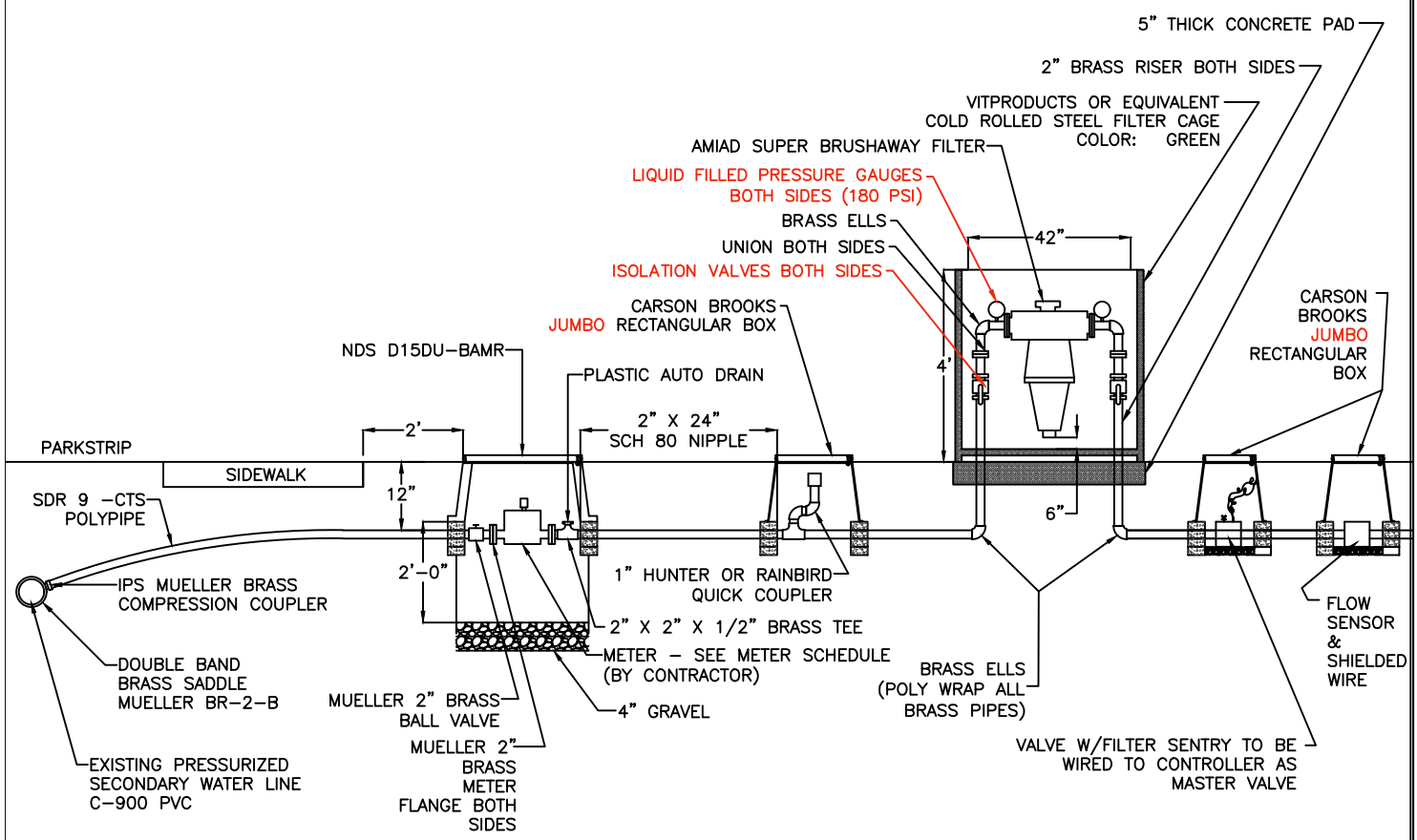

PUBLIC PARKS & OPEN SPACE SECONDARY WATER CONNECTION (2" & SMALLER P.O.C.)

NOTES:

1. MINIMUM SURFACE RESTORATION SHALL BE 3" BITUMINOUS OVER 8" ROADBASE COMPACTED TO 95%. AT MAJOR STREETS, CITY ENGINEER WILL PROVIDE PAVEMENT DESIGN.

2. SERVICES MAY BE TUNNELED OR JETTED UNDER CURB AND GUTTER, DRIVEWAYS, OR SIDEWALKS. OTHER STRUCTURES SHALL BE OPEN CUT WITH SURFACE RESTORATION AT THE ENGINEERS DIRECTION.

3. IF TAPPING SADDLES ARE USED, METHOD OF SAWING/DRILLING TAP HOLES, TYPE OF SADDLE, PROCEDURES MUST BE APPROVED BY THE ENGINEER PRIOR TO INSTALLATION.

4. ALL PIPE AND FITTINGS UPSTREAM OF FILTER TO BE SCH 80 UNLESS SPECIFIED AS BRASS.

5. SCH 40 PIE AND FITTINGS ALLOWED DOWNSTREAM OF FILTER.

6. NO MALE ADAPTERS.

7. 18" BURY TO TOP OF PIPE.

8. CONTRACTOR SHALL BE RESPONSIBLE FOR MEETING ALL OF THE REQUIREMENTS ESTABLISHED FOR SAFE TRENCHING. (SEE OSHA REQUIREMENTS)

9. ALL CONSTRUCTION SHALL MEET CURRENT SARATOGA SPRINGS CITY STANDARDS, SPECIFICATIONS, & ORDINANCES.

10. STAINLESS STEEL LINER INSERTS WILL BE REQUIRED INSIDE OF TUBING AT COMPRESSION FITTINGS.

11. ALL FITTINGS SHALL BE COMPATIBLE WITH SERVICE SIZE.

12. SEE STANDARD FOR PRESSURIZED IRRIGATION SERVICE BOX, 2" PRESSURIZED IRRIGATION SERVICE, AND 4" PRESSURIZED IRRIGATION SERVICE.

13. SERVICE LATERAL SHALL SLOPE TOWARDS PRESSURIZED IRRIGATION MAIN.

14. SPRINKLER SLEEVE SHALL NOT BE IN LINE WITH ANY UTILITY BOXES.

15. SEE SERVICE DETAILS FOR BOX DESCRIPTIONS & TYPES

16. ALL PIPES TO BE BURIED WITH 14 GAUGE STRANDED THHN TRACE WIRE AND MARKING TAPE.

CONNECTION FOR PUBLIC PARKS & OPEN SPACE

DATE: AUGUST 2017

DRAWING NAME: PI-4

DRAWN BY: ETL

CHECKED: APPROVED:

REVISIONS

REVISION	DATE	BY	COMMENTS

SARATOGA SPRINGS CITY

1307 N. COMMERCE DR.
#200, SARATOGA SPRINGS,
UT 84045
PHONE: 801-766-9793
FAX: 801-766-9794

STANDARD DETAILS

PRESSURIZED IRR

PI-4

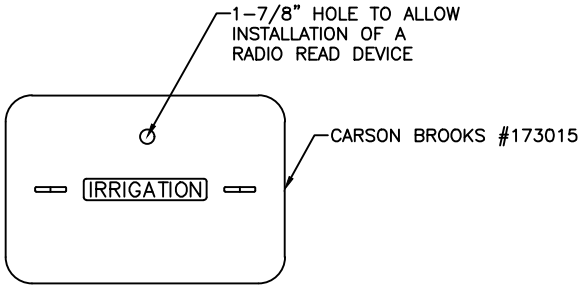

IRRIGATION BOX

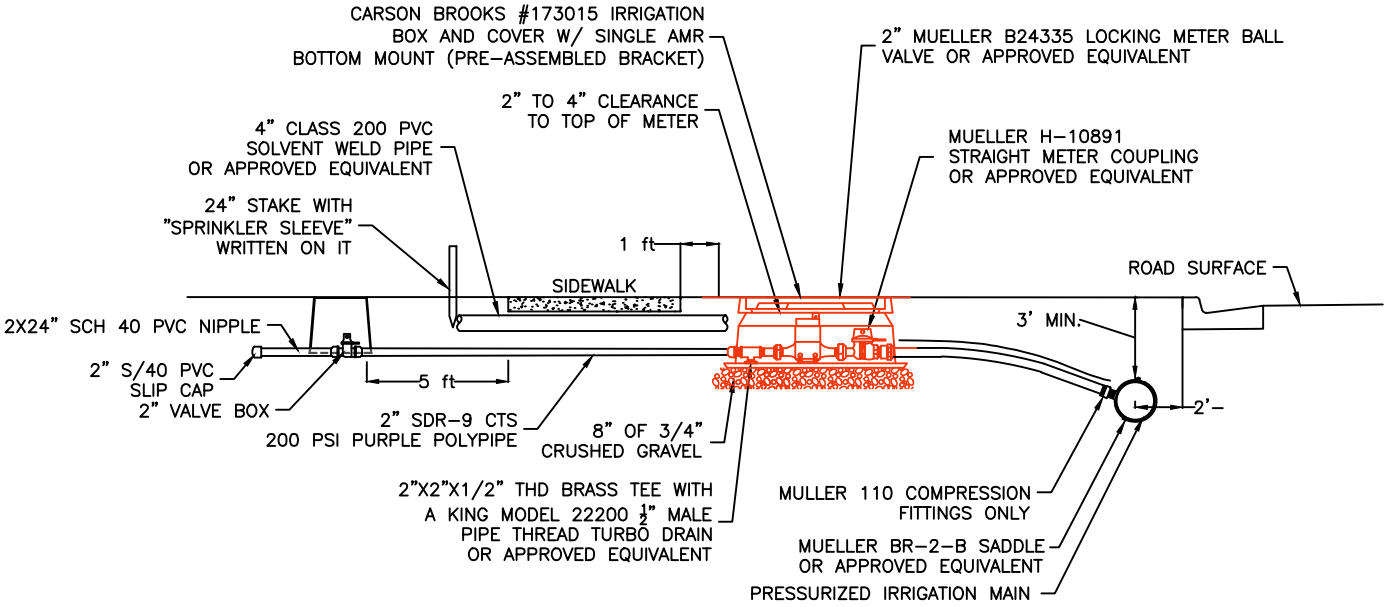

SECTION

NOTES:

1. ADJUST ALL APPURTENCES TO AN EQUIVALENT $1\frac{1}{2}$" SIZE FOR $1\frac{1}{2}$" SERVICES.

2. SPRINKLER SLEEVE SHALL NOT BE IN LINE WITH ANY UTILITY BOXES.

3. ALL PIPES SHALL BE BURIED WITH 14 GAUGE STRANDED THHN TRACE WIRE AND MAGNETIC MARKING TAPE.

2" SERVICE LATERAL

DATE: AUGUST 2017

DRAWING NAME: PI-6

DRAWN BY: ETL

CHECKED: APPROVED:

REVISIONS

REVISION	DATE	BY	COMMENTS
1	08-31-17	RM	EDITED CALLOUTS

SARATOGA SPRINGS CITY

1307 N. COMMERCE DR. #200, SARATOGA SPRINGS, UT 84045
PHONE: 801-766-9793
FAX: 801-766-9794

STANDARD DETAILS

PRESSURIZED IRR

PI-6

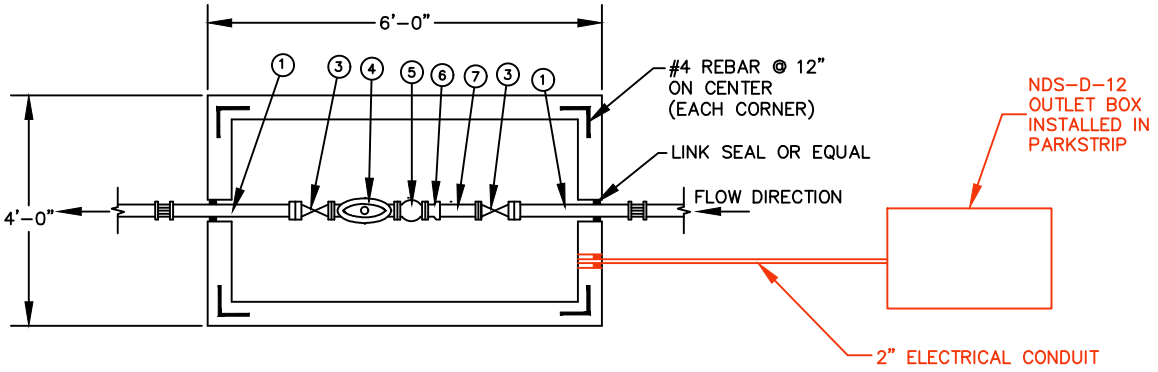

PLAN VIEW

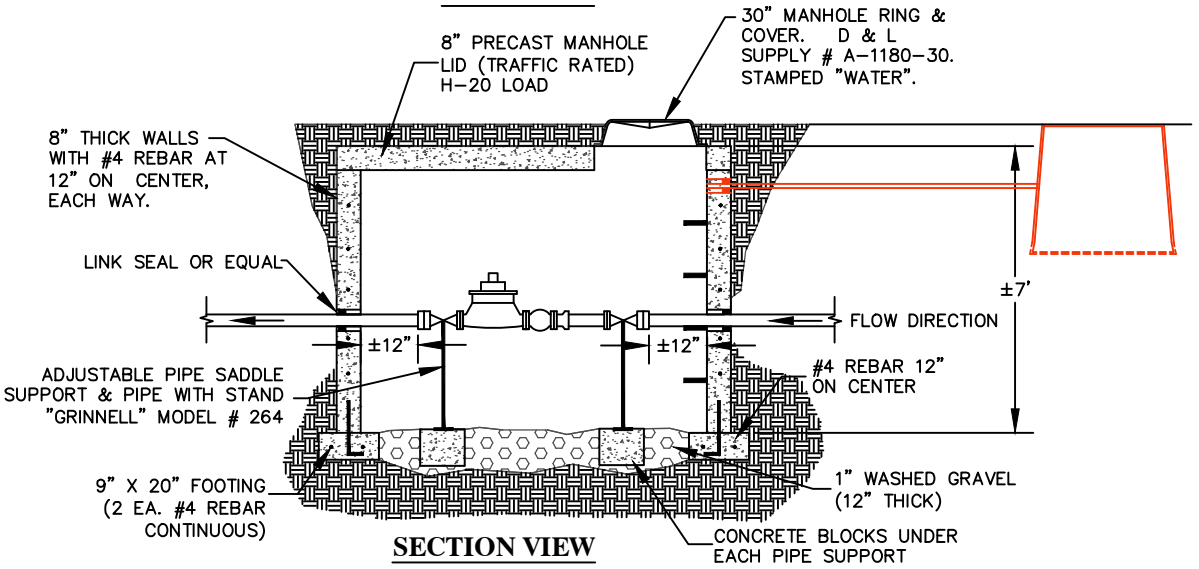

SECTION VIEW

NOTES:

1. INSPECTION: METER BOX AND SERVICE LINE SHALL BE INSPECTED BY CITY PRIOR TO BACKFILLING.

2. BACKFILL: INSTALL BACKFILL IN LIFTS NOT EXCEEDING 8" AFTER COMPACTION. COMPACT EACH LIFT TO AN AVERAGE DRY DENSITY OF 97% WITH NO DENSITY TEST RESULT LESS THAN 92%.

3. ALL 4" INTERIOR FITTINGS TO BE FLANGED.

4. WATER METERS SHALL BE PROVIDED BY CONTRACTOR.

5. PLACEMENT: ALL METERS ARE TO BE INSTALLED IN THE PARK STRIP OR WITHIN 7 FEET OF THE PROPERTY LINE (STREET SIDE) AND MUST BE PLACED NEAR MIDPOINT OF THE LOT AND MUST NOT BE LOCATED IN A DRIVEWAY, OR IN A SIDEWALK.

6. CONTRACTOR SHALL SUPPLY ALL MATERIALS AND LABOR.

7. ALL PIPES SHALL BE BURIED WITH 14 GUAGE STRANDED THHN TRACE WIRE AND MARKING TAPE.

4" PIPE SCHEDULE

#	QTY	DESCRIPTION
1	1	FLxPE D.I. SPOOL LENGTH = ±48"
3	1	4" FLxFL GATE VALVE (MUELLER)*
4	1	4" FLxFL METER
5	1	FLANGED METER STRAINER
6	1	4" FLANGED COUPLING ADAPTER
7	1	FLxPE D.I. SPOOL (LENGTH AS NEEDED)

* GATE VALVE SHALL BE FURNISHED WITH A HANDWHEEL.

4 INCH METER VAULT

DATE: AUGUST 2017

DRAWING NAME: PI-7

DRAWN BY: ETL

CHECKED:

APPROVED:

REVISIONS

REVISION	DATE	BY	COMMENTS

SARATOGA SPRINGS CITY

1307 N. COMMERCE DR.
#200, SARATOGA SPRINGS,
UT 84045
PHONE: 801-766-9793
FAX: 801-766-9794

STANDARD DETAILS

PRESSURIZED IRR

PI-7

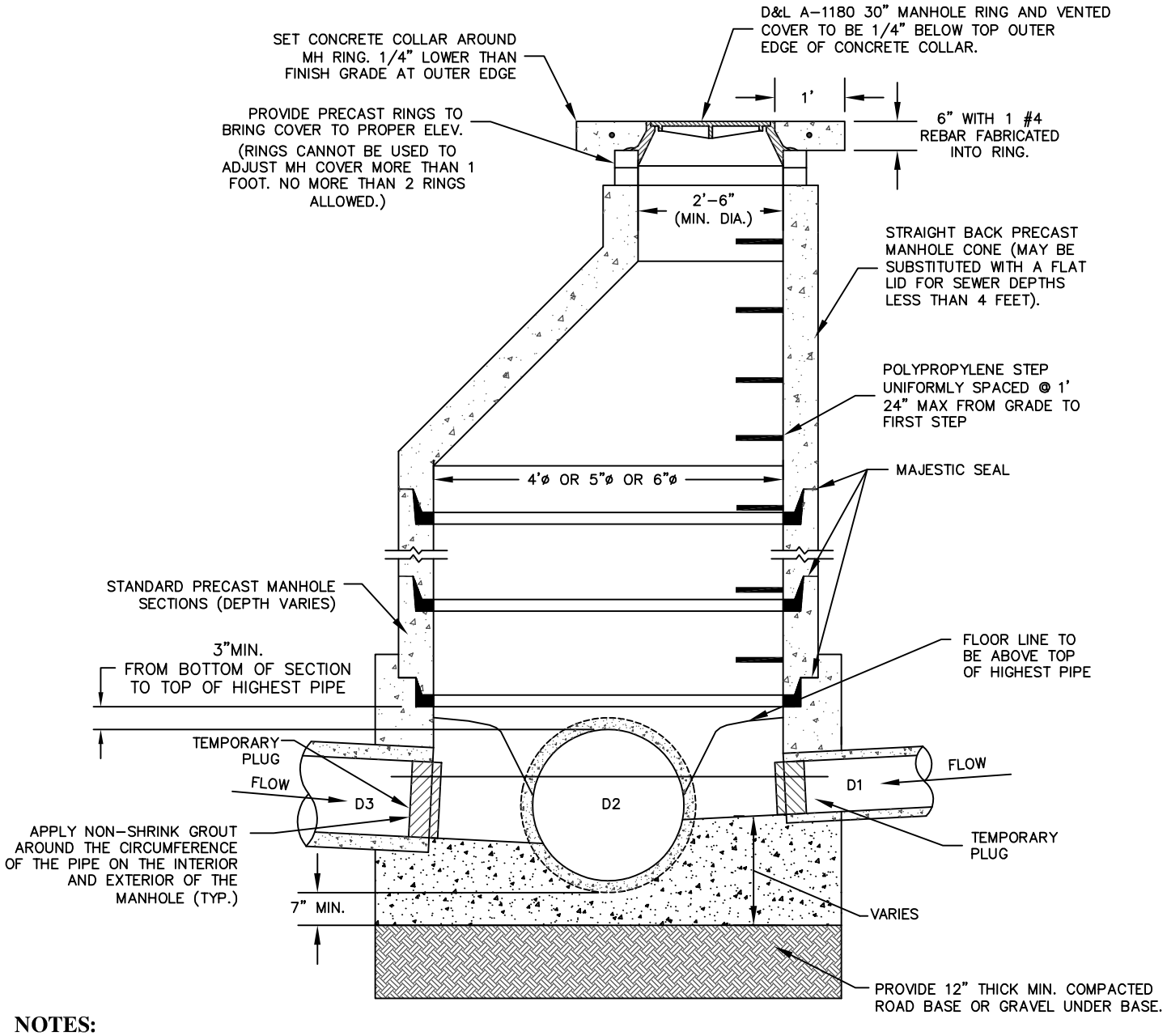

NOTES:

1. PRE-CAST BASES ARE REQUIRED. POURED-IN-PLACE BASES ARE ALLOWED ONLY ON EXISTING SEWER. SEE SS-2A FOR CAST IN PLACE BASE
2. AFTER ALL GRADING AROUND MANHOLE HAS BEEN COMPLETED AND FINAL SURFACING IS IN PLACE REMOVE TEMPORARY PLUGS, DEBRIS AND PLYWOOD FROM INSIDE OF MANHOLES.
3. MANHOLES DEEPER THAN 20 FEET SHALL HAVE AN 18" THICK CONCRETE BASE.
4. CONE AND WALL SECTIONS SHALL CONFORM WITH ASTM C-478 STANDARD.
5. ALL MANHOLES TO BE HS-20 RATED.
6. MANHOLES OUTSIDE OF ROW SHALL HAVE SOLID LOCKING LIDS.
7. FLAT CAST RINGS ARE NOT PERMITTED.
8. LID SHALL BE VENTED AND MARKED SS SEWER.
9. MANHOLES WITH SOLID LIDS MUST BE EPOXY LINED.
10. MANHOLES ARE NOT ALLOWED WITHIN SIDEWALKS, GUTTERS, WATERWAYS, OR OTHER PEDESTRIAN PATHWAYS.

PRE-CAST SANITARY SEWER MANHOLE

DATE: 2/21/2020

DRAWING NAME: SS-2

DRAWN BY: ETL

CHECKED: APPROVED:

REVISIONS

REVISION	DATE	BY	COMMENTS
1	6/25/15	JW	MAKING PRE-CAST AND CAST IN PLACE DTLS
2	8/31/17	RM	EDITED CALLOUTS AND NOTES. REMOVED COLLARS AND GROUT RINGS.

SARATOGA SPRINGS CITY

1307 N. COMMERCE DR. #200, SARATOGA SPRINGS, UT 84045
PHONE: 801-766-9793
FAX: 801-766-9794

STANDARD DETAILS

SANITARY SEWER

SS-2

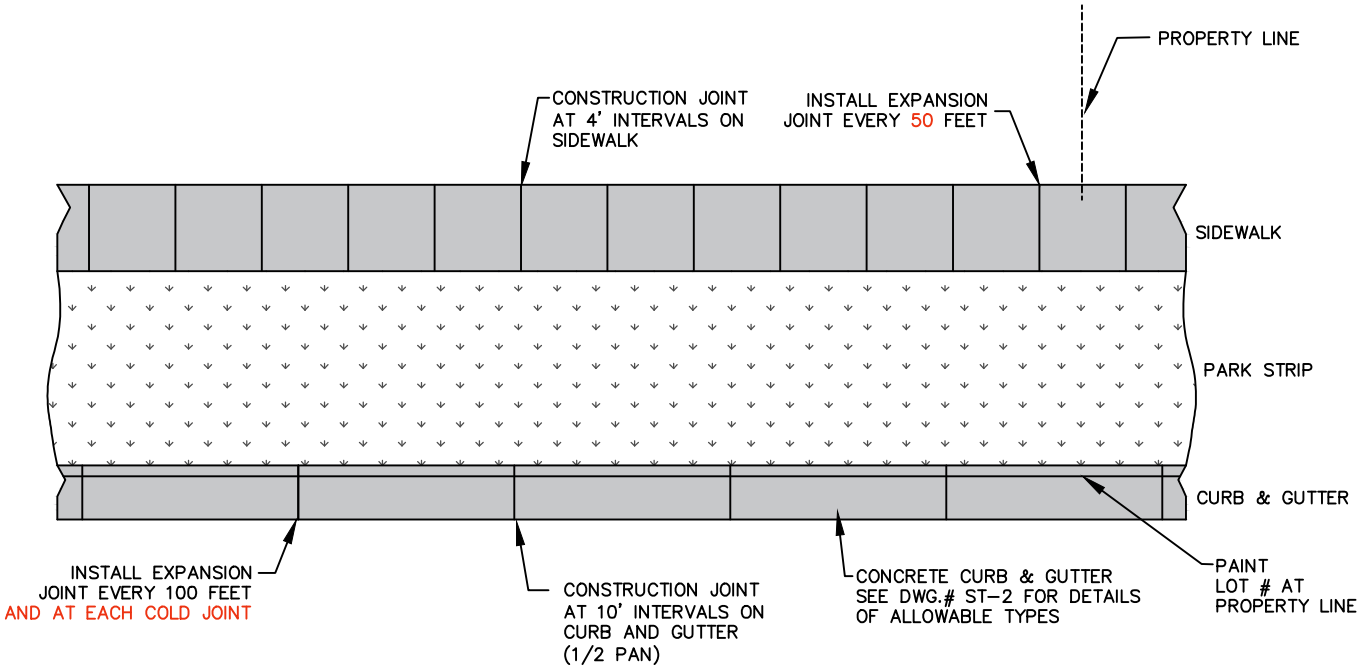

PLAN VIEW

NOTES:

1. A MINIMUM 6" DEPTH OF ROADBASE MATERIAL SHALL BE PLACED TO GRADE AND COMPACTED TO 95% OF MAXIMUM DRY DENSITY UNDER DRIVEWAY, WATERWAY, AND CURB & GUTTER PRIOR TO PLACEMENT OF CONCRETE.

2. A MINIMUM 6" DEPTH OF ROADBASE MATERIAL SHALL BE PLACED TO GRADE AND COMPACTED TO 95% OF MAXIMUM DRY DENSITY UNDER SIDEWALK AT ALL OTHER LOCATIONS PRIOR TO PLACEMENT OF CONCRETE.

3. WHERE CONSTRUCTION IS ADJACENT TO STATE HIGHWAY FRONTAGE, STATE HIGHWAY DEPARTMENT REQUIREMENTS SHALL GOVERN.

4. CONCRETE SHALL BE 3/4 INCH MAXIMUM AGGREGATE, 6.3 BAGS PER YARD OF TYPE 2 CEMENT WITH A MINIMUM COMMPRESSIVE STRENGTH OF 4,000 PSI AT 28 DAYS.

5. EXPANSION JOINTS FOR CURB & GUTTER ARE TO BE SPACED NO MORE THAN 100 FT. AND SIDEWALKS SHALL BE SPACED NO MORE THAN EVERY 50 FT. EXPANSION JOINTS SHALL BE CONSTRUCTED BY PLACING AN APPROVED MATERIAL, (TYPICALLY BITUMINOUS IMPREGNATED FIBERBOARD), THE FULL DEPTH OF THE CONCRETE. EXPANSION MATERIAL SHALL BE SET 1/2" BELOW THE FINISH LEVEL OF THE SIDEWALK.

6. CONSTRUCTION JOINT IS MADE BY SCORING THE CONCRETE WITH 1/2" RADIUS EDGING TOOL OR OTHER METHOD APPROVED BY ENGINEER.

7. SLOPE SIDEWALK TO ROADWAY AT 1.5% GRADE (2% MAX).

8. LOCATE ALL INLET GRATES 2' MINIMUM AWAY FROM THE PEDESTRIAN CROSSWALK, WITH ALL DRAINAGE INTERCEPTED BEFORE IT GETS TO THE CROSSWALK AREA.

9. THE SIDEWALK SHALL BE A MIN. 5" THICK CONCRETE.

10. IN ROCKY SUB-GRADES 18" OF BOTTOM OF TRENCH TO BOTTOM OF PIPE. MIN. OF 2' OF OUTSIDE DIAMETER.

11. INSTALL MAGNETIC DETECTOR TAPE WITH A MIN. OF 14 GAUGE COATED TRACER WIRE FOR ALL PVC OR OTHER PIPE.

12. PAINT LOT NUMBERS AT PROPERTY LINES.

13. SEWER LATERAL LOCATIONS TO BE MARKED ON TOP OF CURB WITH AN S.

14. CULINARY WATER LATERAL LOCATIONS TO BE MARKED ON TOP OF CURB WITH A W.

15. SECONDARY WATER LATERAL LOCATIONS TO BE MARKED ON TOP OF CURB WITH AN I.

16. WATER VALVE LOCATIONS TO BE MARKED ON TOP OF CURB WITH A V.

SIDEWALK, CURB & GUTTER STANDARDS

DATE:	AUGUST 2017
DRAWING NAME:	ST-1
DRAWN BY:	ETL
CHECKED:	
APPROVED:	

REVISIONS

REVISION	DATE	BY	COMMENTS

SARATOGA SPRINGS CITY

1307 N. COMMERCE DR.
#200, SARATOGA SPRINGS,
UT 84045
PHONE: 801-766-9793
FAX: 801-766-9794

STANDARD DETAILS

STREET STANDARDS

ST-1

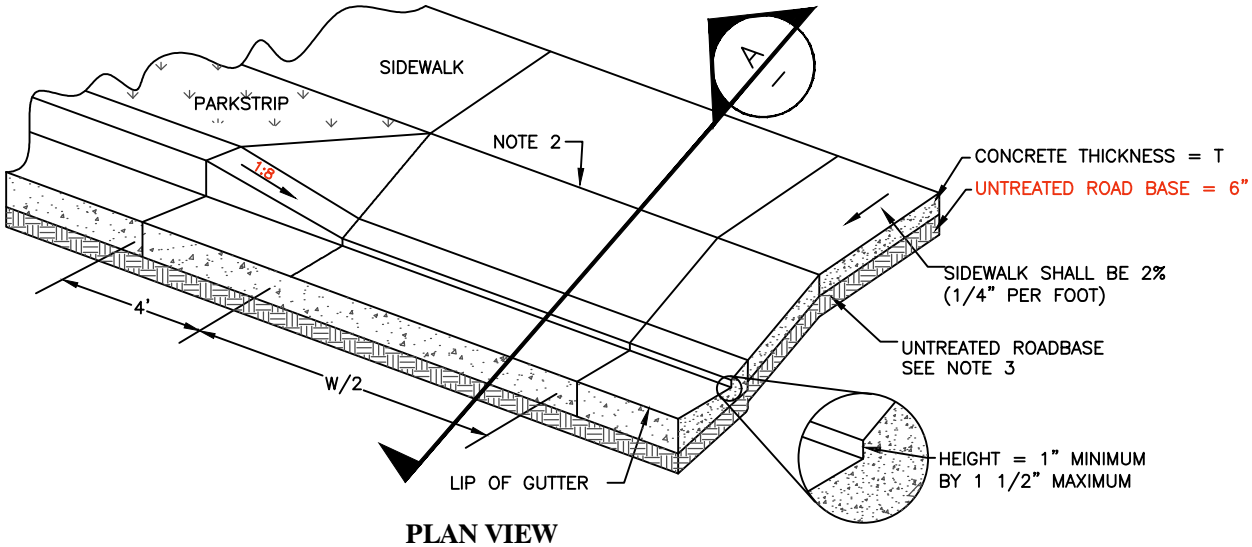

PLAN VIEW

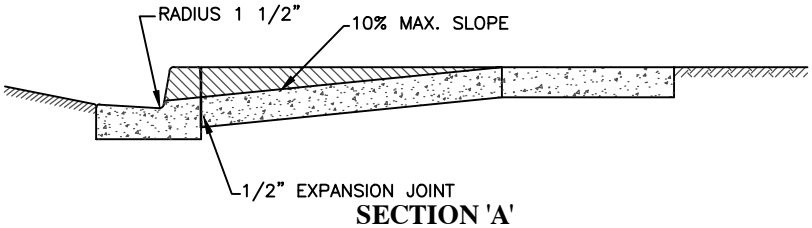

SECTION 'A'

NOTES:

1. EDGE CONCRETE WITH 1/2" RADIUS EDGING TOOL.

2. PLACE 1/2" EXPANSION JOINT BETWEEN DRIVEWAY APRON AND CURB AND IN THE DRIVEWAY CENTERLINE IF "W" IS GREATER THAN 20'. FILLER MATERIAL SHALL BE FULL DEPTH OF CONCRETE PLUS 1", WITH TOP SET FLUSH WITH TOP OF CONCRETE.

3. USE UNTREATED ROADBASE UNDER CURB, GUTTER AND SIDEWALK. COMPACT TO 95% OF THE MAXIMUM DRY DENISTY.

4. ALL CONCRETE SLABS WITH A LENGTH/WIDTH RATIO GREATER THAN 2:1 SHALL HAVE CONTRACTION JOINTS INSTALLED AS REQUIRED TO STAY WITHIN 2:1 RATIO.

5. BACK EDGE OF SIDEWALK TO BE SET AT AN ELEVATION 1.5% HIGHER THAN THE TOP BACK OF CURB (2.5%).

6. SIDEWALK TO BE A MINIMUM OF 5 FEET WIDE UNLESS OTHERWISE SPECIFIED.

7. MATERIALS, CONSTRUCTION, AND WORKMANSHIP SHALL BE IN ACCORDANCE WITH CITY'S STANDARD SPECIFICATIONS.

DRIVE APPROACH DIMENSIONS

DIMENSION	LEGNTH ACCORDING TO ZONE
W	12'–0" MIN. RESIDENTIAL ZONES 30'–0" MAX. RESIDENTIAL ZONES
T	0'–5" RESIDENTIAL ZONES

SLOPE TABLE

DIMENSION	ZONE
A 12% MAX.	RESIDENTIAL ZONE
B 13% MAX.	RESIDENTIAL ZONE
C 15% MAX.	RESIDENTIAL ZONE

SINGLE FAMILY RESIDENTIAL DRIVE APPROACH

DATE: AUGUST 2017

DRAWING NAME: ST-4A

DRAWN BY: ETL

CHECKED: APPROVED:

REVISIONS

REVISION	DATE	BY	COMMENTS
1	08-31-17	RM	ADDED NEW MIN. AND MAX. LENGTHS FOR DIMENSION W

SARATOGA SPRINGS CITY

1307 N. COMMERCE DR.
#200, SARATOGA SPRINGS,
UT 84045
PHONE: 801-766-9793
FAX: 801-766-9794

STANDARD DETAILS

STREET STANDARDS

ST-4A

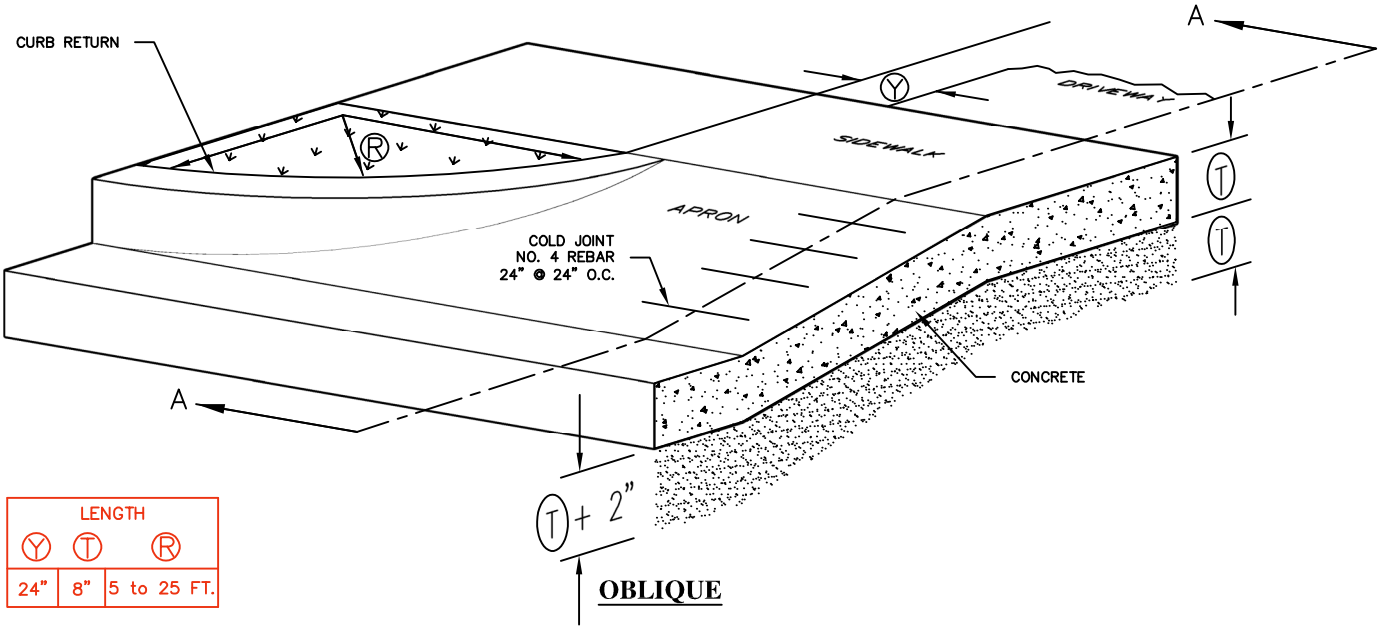

LENGTH		
Y	T	R
24"	8"	5 to 25 FT.

OBLIQUE

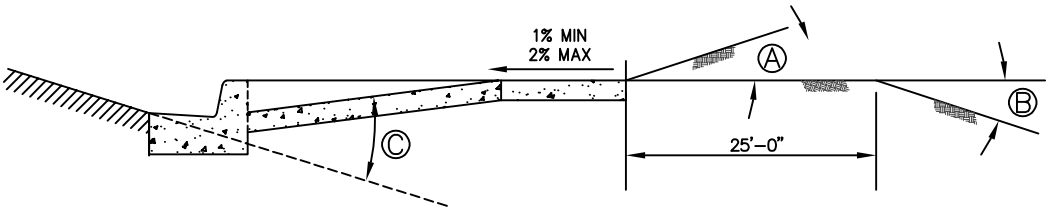

BREAK OVER ANGLE (MAXIMUM)		
A	B	C
6%	8%	10%

SECTION A-A - APPROACH REQUIRING SERVICE TRUCK ACCESS

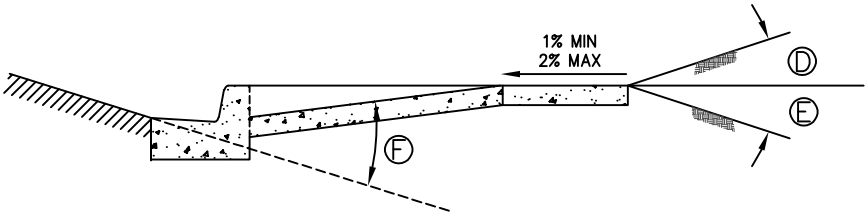

SLOPE		
D	E	F
6%	8%	10%

SECTION A-A - TYPICAL DRIVEWAY APPROACH

NOTES

1. EDGE CONCRETE WITH 1/2" RADIUS EDGING TOOL.
2. PLACE 1/2" EXPANSION JOINT BETWEEN DRIVEWAY APRON AND CURB AND IN THE DRIVEWAY CENTERLINE IF "W" IS GREATER THAN 20'. FILLER MATERIAL SHALL BE FULL DEPTH OF CONCRETE PLUS 1", WITH TOP SET FLUSH WITH TOP OF CONCRETE.
3. USE UNTREATED ROADBASE UNDER CURB, GUTTER AND SIDEWALK. COMPACT TO 95% OF THE MAXIMUM DRY DENISTY.
4. ALL CONCRETE SLABS WITH A LENGTH/WIDTH RATIO GREATER THAN 2:1 SHALL HAVE CONTRACTION JOINTS INSTALLED AS REQUIRED TO STAY WITHIN 2:1 RATIO.
5. BACK EDGE OF SIDEWALK TO BE SET AT AN ELEVATION 1.5% HIGHER THAN THE TOP BACK OF CURB (2% MAX).
6. SIDEWALK TO BE A MINIMUM OF 5 FEET WIDE UNLESS OTHERWISE SPECIFIED.
7. MATERIALS, CONSTRUCTION, AND WORKMANSHIP SHALL BE IN ACCORDANCE WITH CITY'S STANDARD SPECIFICATIONS.

COMMERCIAL DRIVE APPROACH

DATE: AUGUST 2017

DRAWING NAME: ST-4B

DRAWN BY: RFM

CHECKED: APPROVED:

REVISIONS

REVISION	DATE	BY	COMMENTS
1	03-12-19	JRP	ADDED SECTION VIEWS AND TABLES

SARATOGA SPRINGS CITY

1307 N. COMMERCE DR.
#200, SARATOGA SPRINGS,
UT 84045
PHONE: 801-766-9793
FAX: 801-766-9794

STANDARD DETAILS

STREET STANDARDS

ST-4B

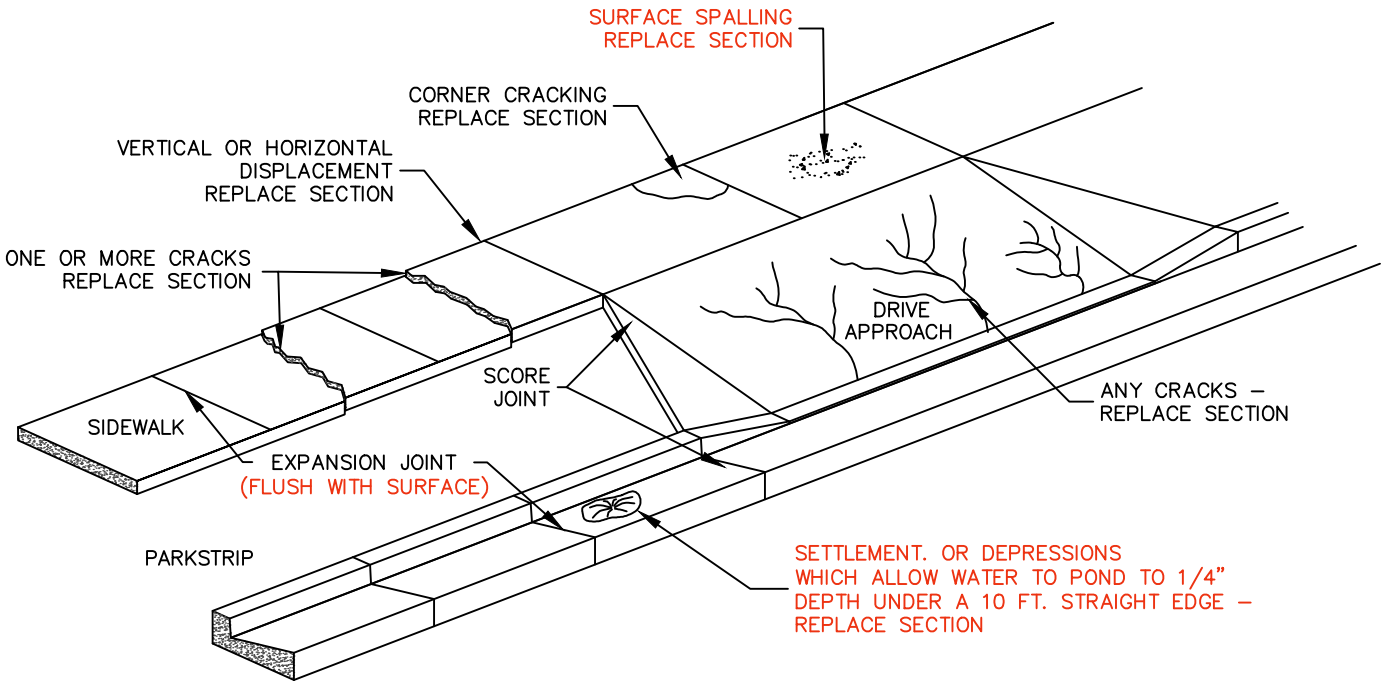

NOTES:

REPLACEMENT IS REQUIRED IF ANY COMPONENT HAS ONE OR MORE OF THE CONDITIONS NOTED ABOVE. OTHERWISE REPAIR SECTION UNDER THE DIRECTION OF THE CITY ENGINEER.

DEFECTIVE CONCRETE REPLACEMENT CRITERIA

DATE:	AUGUST 2017
DRAWING NAME:	ST-6
DRAWN BY:	ETL
CHECKED:	
APPROVED:	

REVISIONS

REVISION	DATE	BY	COMMENTS

SARATOGA SPRINGS CITY

1307 N. COMMERCE DR.
#200, SARATOGA SPRINGS,
UT 84045
PHONE: 801-766-9793
FAX: 801-766-9794

STANDARD DETAILS

STREET STANDARDS

ST-6

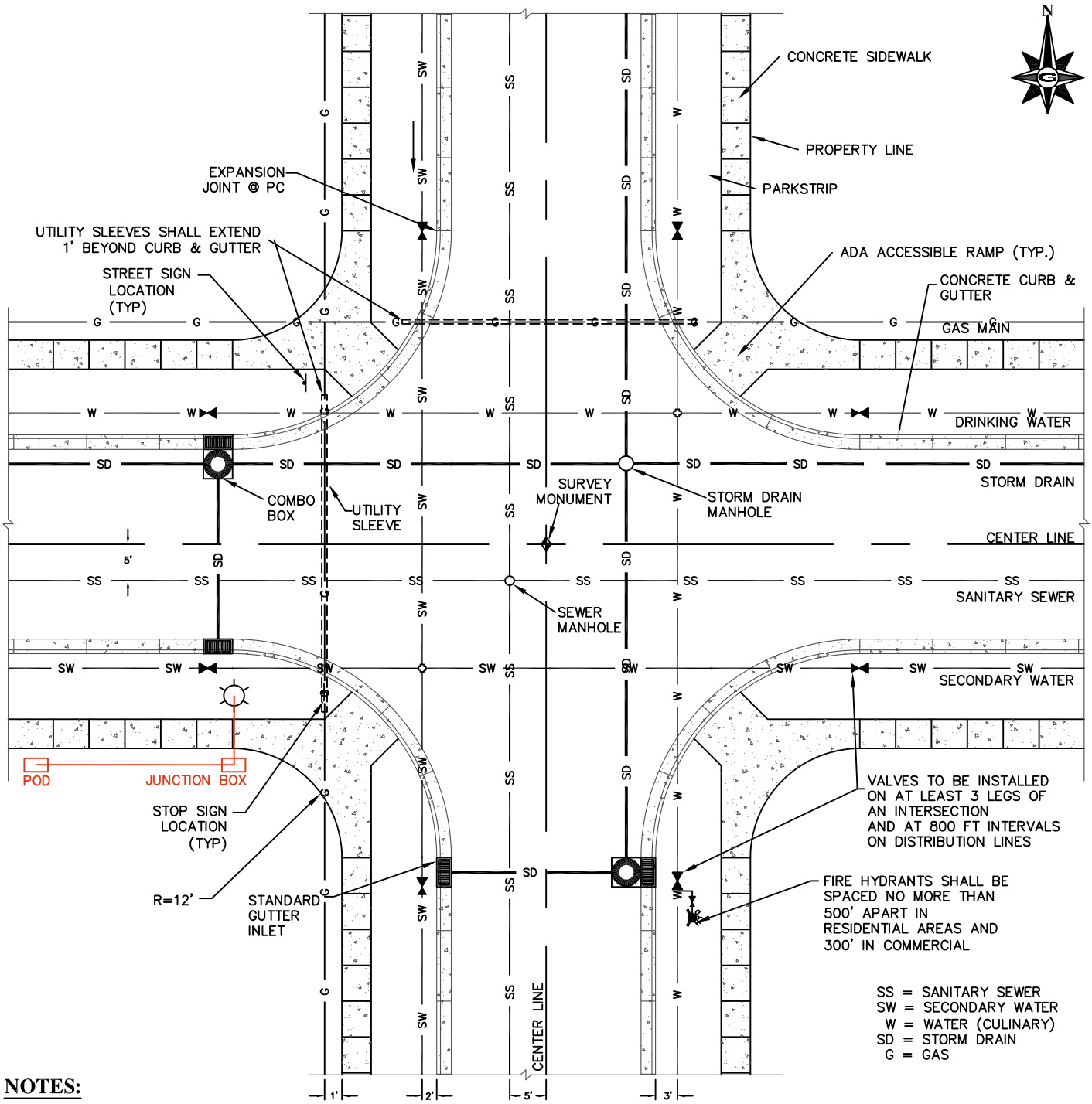

NOTES:

1. LAND DRAINS ARE UNACCEPTABLE UNLESS EXPLICITLY ALLOWED BY CITY ENGINEER. WHEN ALLOWED, PIPES SHALL NOT BE PERFORATED OR DESIGNED TO ACCEPT WATER WITHIN THE STREET RIGHT-OF-WAY.

2. CURB RADIUS ON LOCAL AND COLLECTOR RIGHT-OF-WAYS SHALL BE 25', ON MINOR ARTERIALS IT SHALL BE 35', AND ON MAJOR AND PRINCIPAL ARTERIALS SHALL BE 40' AS MEASURED FROM FACE OF CURB.

3. CHECK ALL CITY STANDARDS FOR UTILITY LOCATIONS.

4. STREET LIGHTS ARE TO BE CENTERED IN PARK STRIPS.

5. STREET LIGHTS ARE TO BE PLACED AT INTERSECTIONS AND EVERY 300 FEET, ALTERNATING SIDES OF STREET.

6. MANHOLES SHALL BE LOCATED A MINIMUM OF 7' FROM EDGE OF GUTTER WHEN ROAD CURVATURE REQUIRES DEVIATION FROM THE ABOVE STANDARD.

STANDARD INTERSECTION & UTILITIES

DATE:	AUGUST 2017
DRAWING NAME:	ST-7
DRAWN BY:	ETL
CHECKED:	APPROVED:

REVISIONS

REV	DATE	BY	COMMENTS

SARATOGA SPRINGS CITY

1307 N. COMMERCE DR.
#200, SARATOGA SPRINGS, UT 84045
PHONE: 801-766-9793
FAX: 8017669794

STANDARD DETAILS

STREET STANDARDS

ST-7

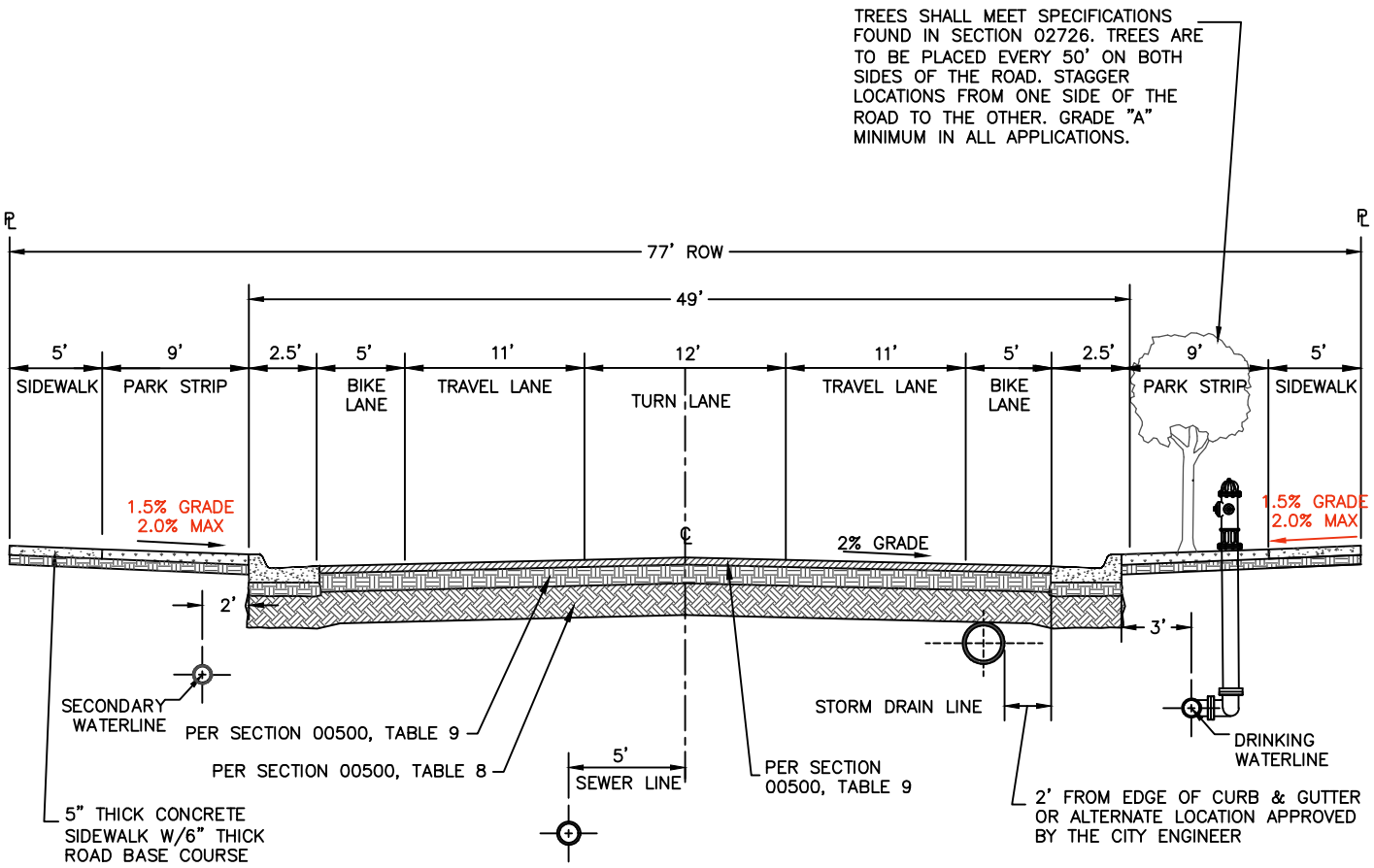

NOTES:

1. MAXIMUM DIFFERENCE IN ELEVATION BETWEEN CURB ON OPPOSITE SIDES OF STREET SHALL NOT EXCEED 1'–0"
2. PROVIDE A MINIMUM 6" THICKNESS OF 3/4" OR 1" CRUSHED GRAVEL BASE COURSE UNDER SIDEWALKS, DRIVEWAY APPROACHES, AND CURB & GUTTER.
3. INSTALL TYPE 2 SLURRY SEAL.
4. HOUSES ARE DISCOURAGED FROM FRONTING ON THESE STREETS.

COLLECTOR
77' RIGHT OF WAY

DATE:	AUGUST 2017
DRAWING NAME:	ST-9
DRAWN BY:	ETL
CHECKED:	APPROVED:

REVISIONS

REVISION	DATE	BY	COMMENTS
1	08-31-17	RM	ADDED REFERENCES TO SPECIFICATIONS, DELETED UNNECESSARY NOTES.

SARATOGA SPRINGS CITY

1307 N. COMMERCE DR.
#200, SARATOGA SPRINGS,
UT 84045
PHONE: 801-766-9793
FAX: 801-766-9794

STANDARD DETAILS

STREET STANDARDS

ST-9A

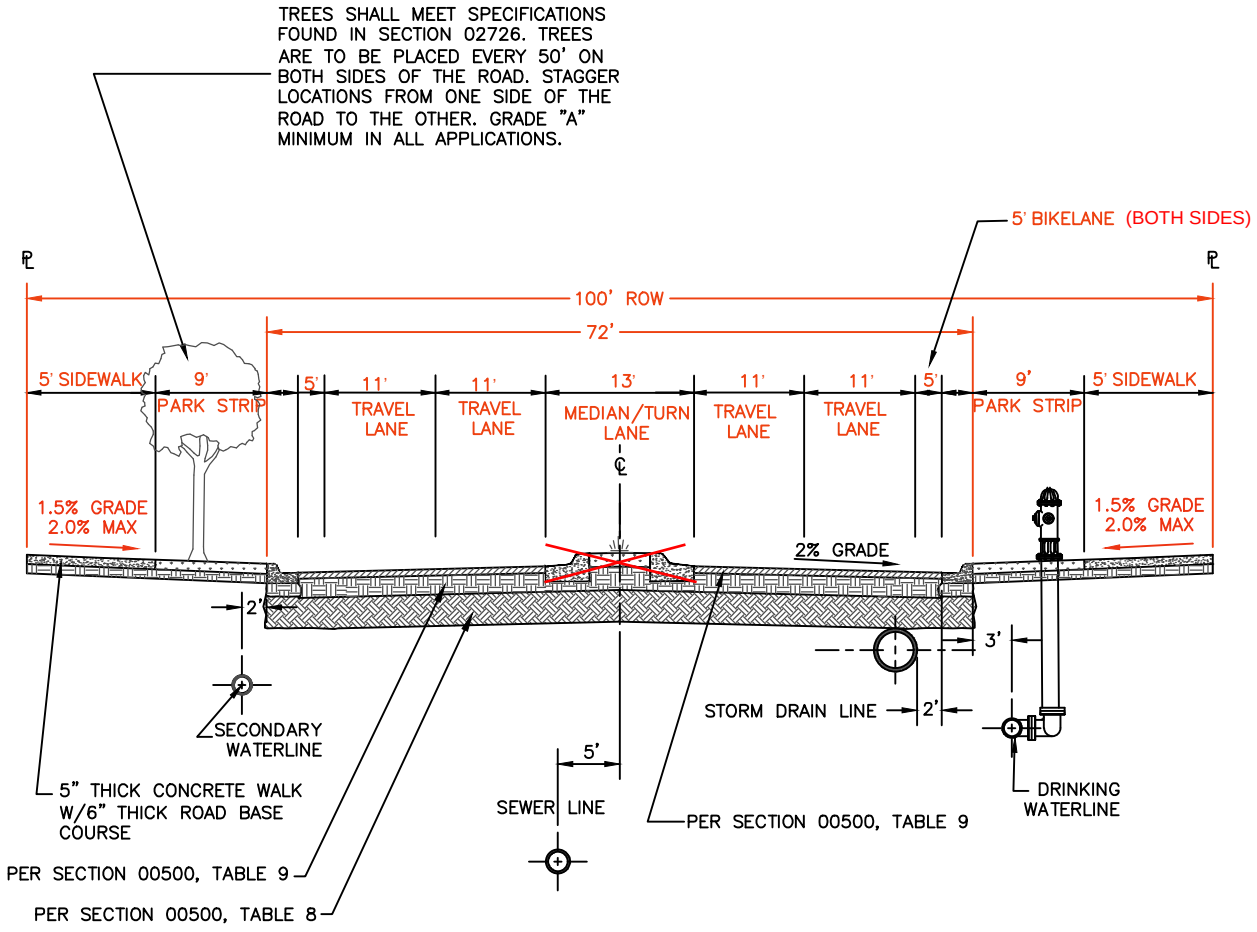

NOTES:

1. MAXIMUM DIFFERENCE IN ELEVATION BETWEEN CURB ON OPPOSITE SIDES OF STREET SHALL NOT EXCEED 1'-0"
2. PROVIDE A MINIMUM 6" THICKNESS OF 3/4" OR 1" CRUSHED GRAVEL BASE COURSE UNDER SIDEWALKS, DRIVEWAY APPROACHES, AND CURB & GUTTER.
3. INSTALL TYPE 2 SLURRY SEAL.
4. COMMERCIAL OR INDUSTRIAL DRIVEWAYS CAN ENTER THIS ROADWAY, BUT ARE TO BE MINIMIZED.
5. HOUSES ARE NOT PERMITTED TO FRONT ON THESE STREETS.
6. PAVEMENT SECTION SHALL BE ADEQUATE FOR CONSTRUCTION TRAFFIC OR AN ALTERNATE ROUTE SHALL BE PROVIDED.
7. MEDIAN SHALL HAVE PLOWABLE END SECTIONS

MINOR ARTERIAL
95' RIGHT-OF-WAY

DATE: AUGUST 2017

DRAWING NAME: ST-10

DRAWN BY: ETL

CHECKED: APPROVED:

REVISIONS

REVISION	DATE	BY	COMMENTS
1	08-31-17	RM	EDITED DIMENSIONS, ADDED REFERENCES TO SPECIFICATIONS, DELETED UNNECESSARY NOTES

SARATOGA SPRINGS CITY

1307 N. COMMERCE DR. #200, SARATOGA SPRINGS, UT 84045
PHONE: 801-766-9793
FAX: 801-766-9794

STANDARD DETAILS

STREET STANDARDS

ST-10

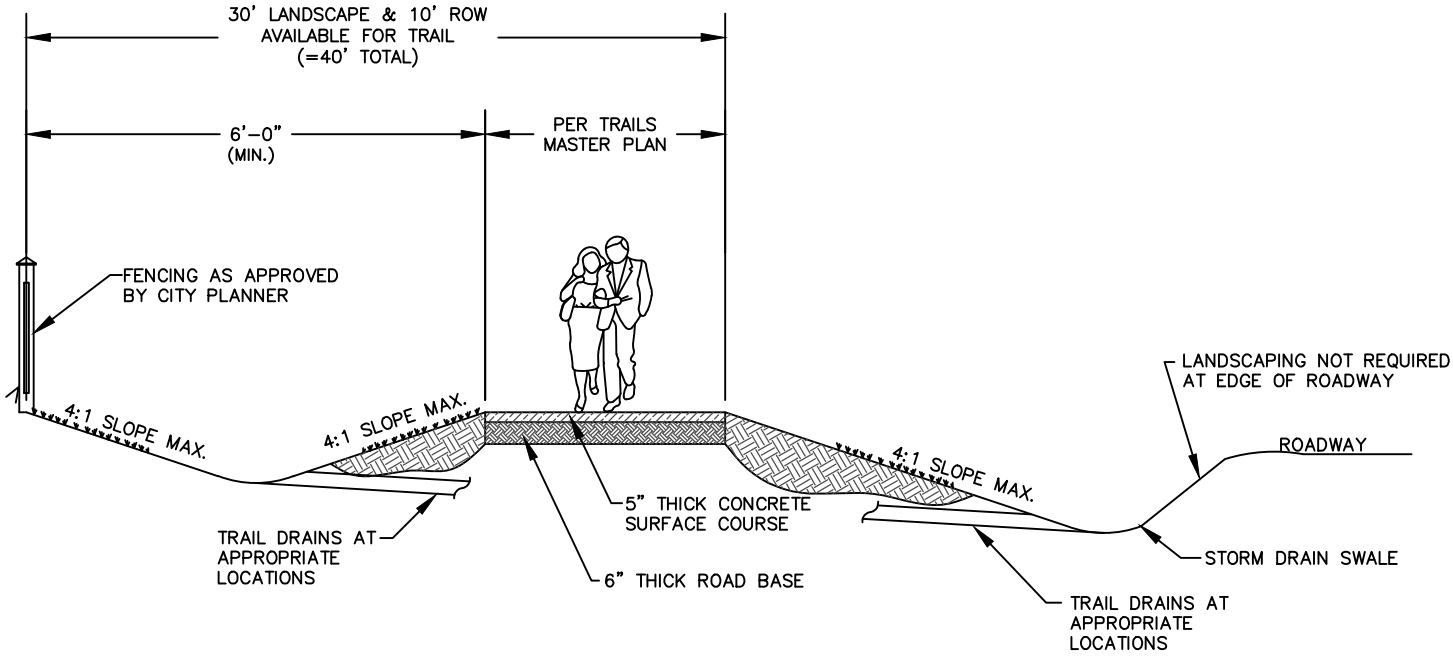

NOTES:

1. CONSTRUCTION JOINTS @ 8' INTERVALS EXPANSION JOINTS @ 40' INTERVALS
2. TRAIL TO BE CONSTRUCTED WITH A 1.5% CROSS SLOPE AND 2% MAX

TRAIL STANDARDS FOR INTERIM ROADS

DATE:	AUGUST 2017
DRAWING NAME:	ST-15B
DRAWN BY:	ETL
CHECKED:	
APPROVED:	

REVISIONS

REVISION	DATE	BY	COMMENTS

SARATOGA SPRINGS CITY

1307 N. COMMERCE DR.
#200, SARATOGA SPRINGS,
UT 84045
PHONE: 801-766-9793
FAX: 801-766-9794

STANDARD DETAILS

STREET STANDARDS

ST-15B

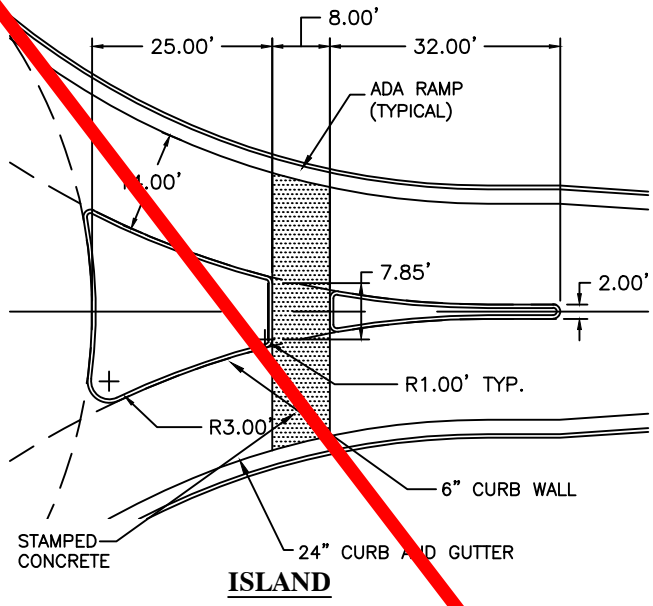

ISLAND

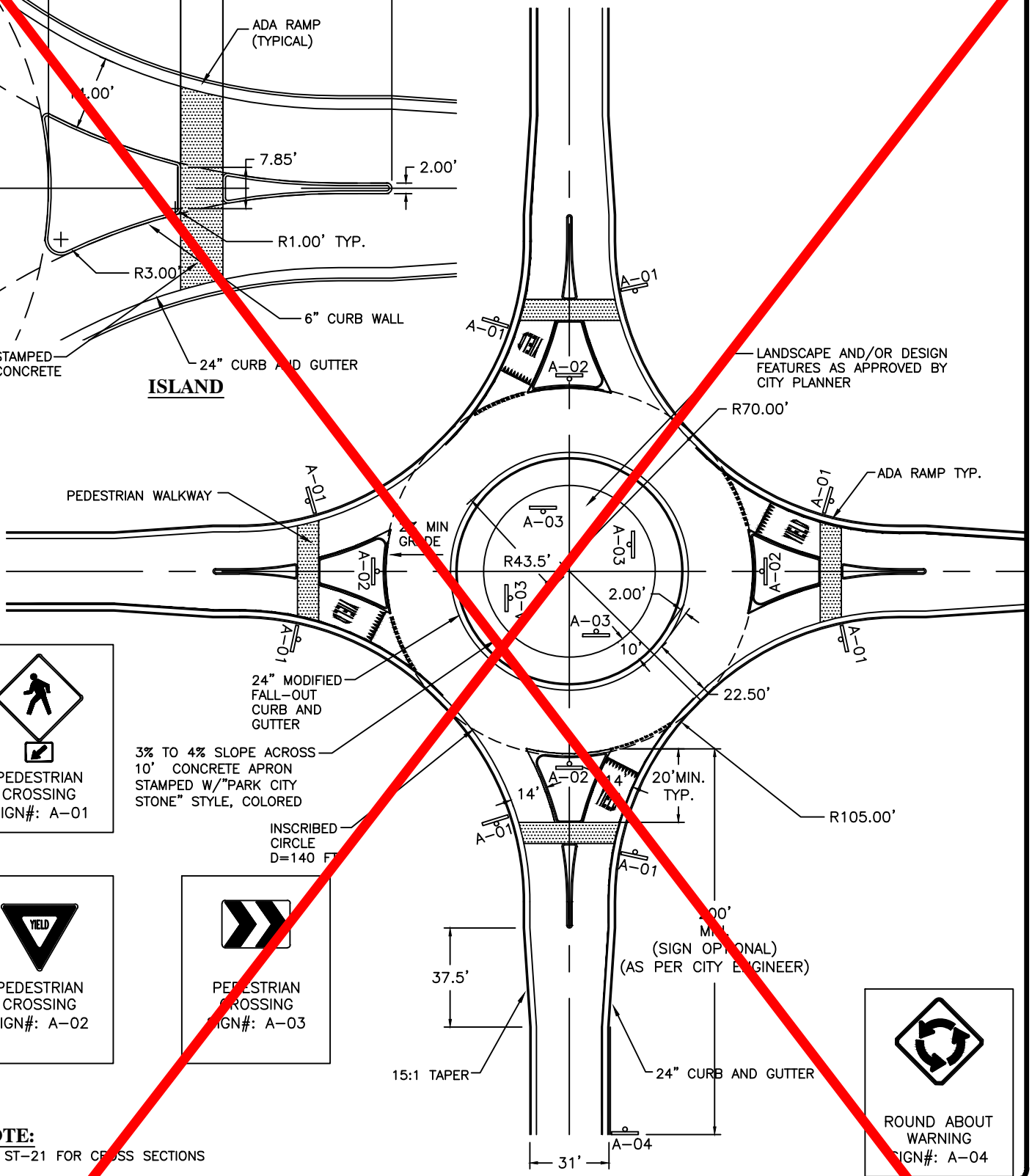

NOTE:
SEE ST-21 FOR CROSS SECTIONS

ROUND-ABOUT LOCAL 59' RIGHT-OF-WAY

DATE:	AUGUST 2017
DRAWING NAME:	ST-17
DRAWN BY:	ETL
CHECKED:	APPROVED:

REVISIONS

REV	DATE	BY	COMMENTS
1	08-31-17	RM	EDITED DIMENSIONS, NOTES, AND CALLOUTS

SARATOGA SPRINGS CITY

1307 N. COMMERCE DR.
#200, SARATOGA SPRINGS,
UT 84045
PHONE: 801-766-9793
FAX: 8017669794

STANDARD DETAILS

STREET STANDARDS

ST-17

This is a new standard drawing proposed for consideration.

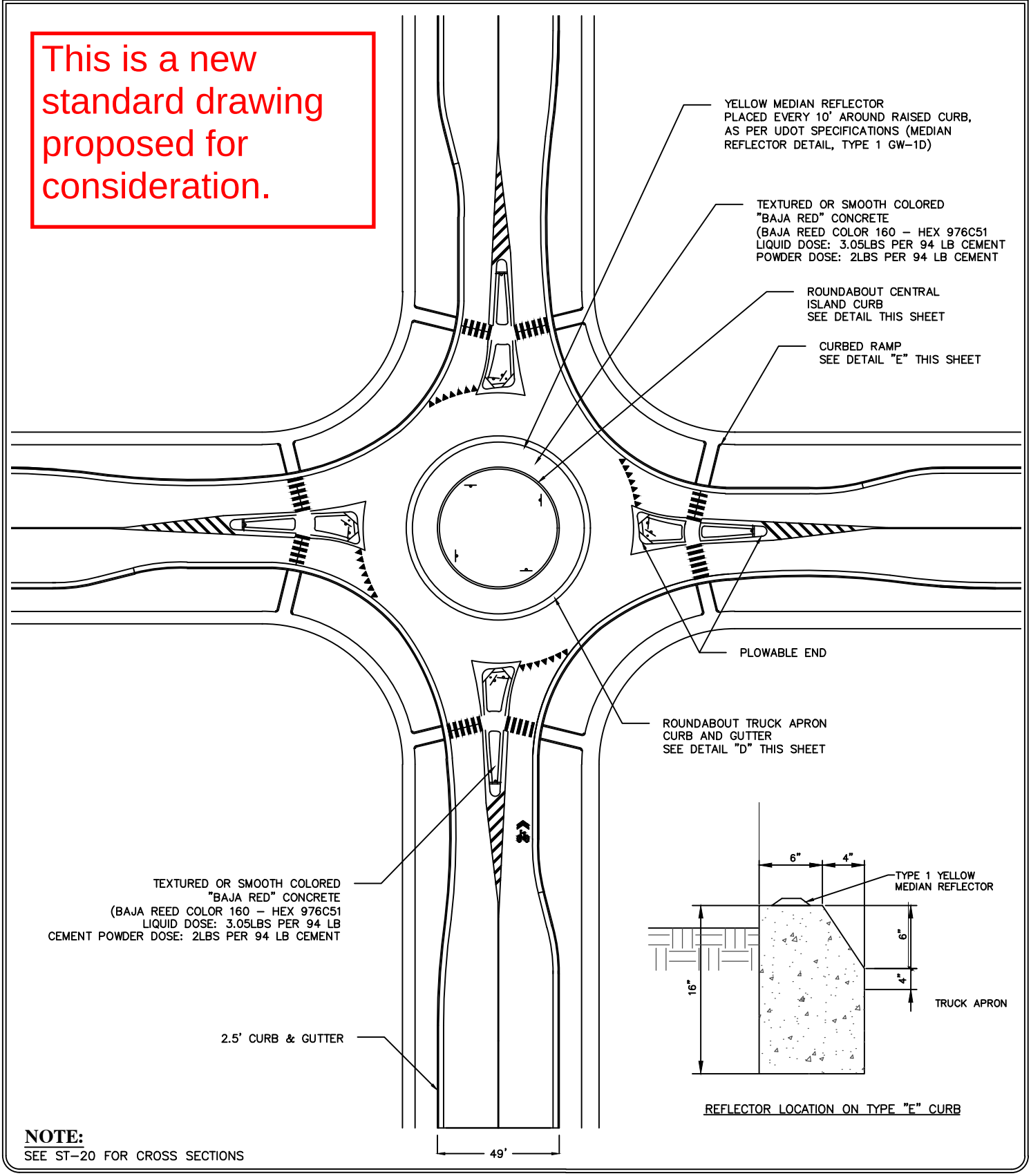

NOTE:
SEE ST-20 FOR CROSS SECTIONS

ROUND-ABOUT COLLECTOR 77' RIGHT-OF-WAY

DATE: AUGUST 2017

DRAWING NAME: ST-18

DRAWN BY: ETL

CHECKED: APPROVED:

REVISIONS

REVISION	DATE	BY	COMMENTS
1	08-31-17	RM	EDITED NOTES AND CALLOUTS

SARATOGA SPRINGS CITY

1307 N. COMMERCE DR.
#200, SARATOGA SPRINGS,
UT 84045
PHONE: 801-766-9793
FAX: 801-766-9794

STANDARD DETAILS

STREET STANDARDS

ST-18

NOTE:
SEE S-20 FOR CROSS SECTIONS

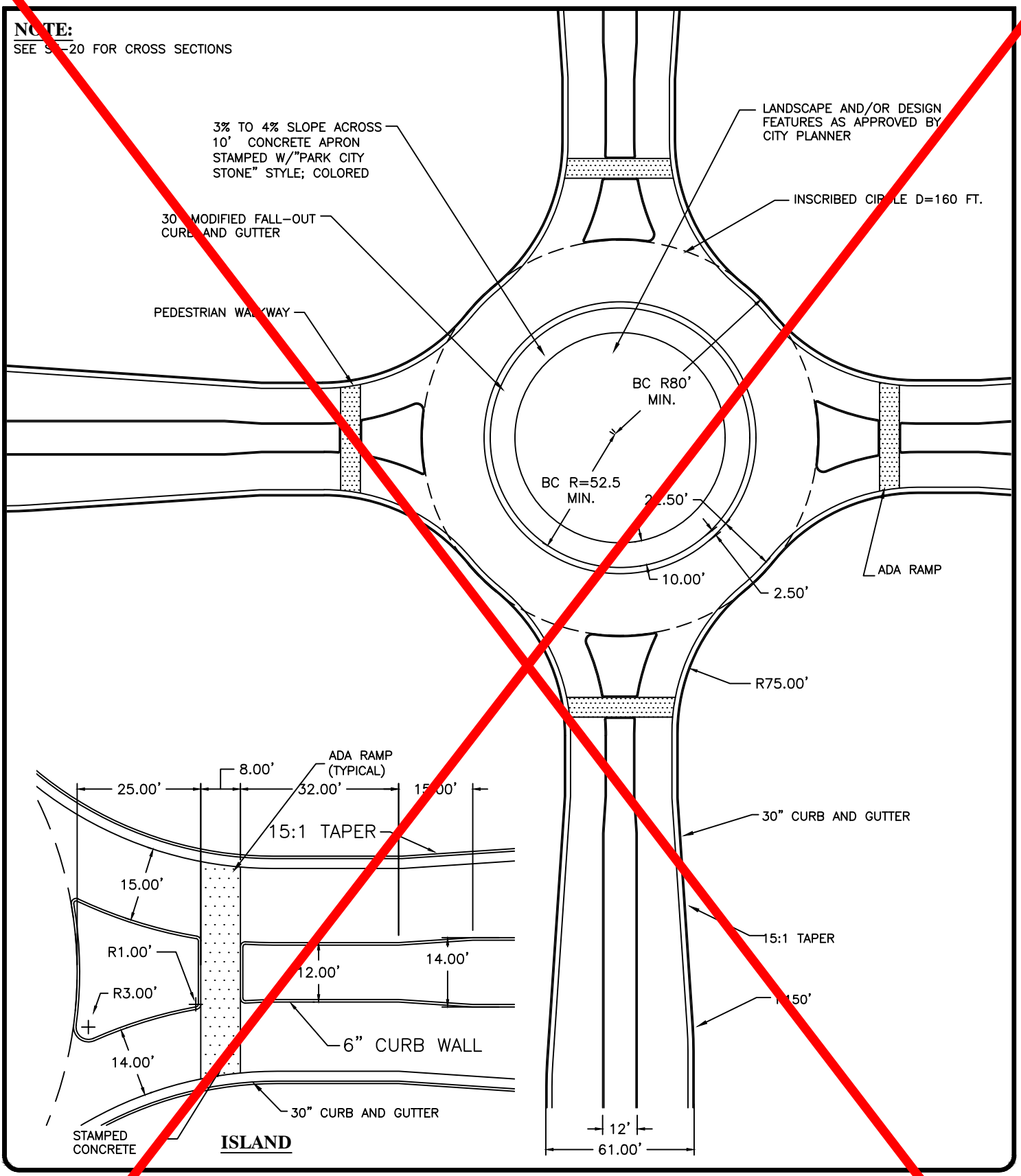

ROUND-ABOUT
95' MINOR ARTERIAL
RIGHT- OF - WAY

DATE:	APRIL 2018
DRAWING NAME:	ST-19
DRAWN BY:	ETL
CHECKED:	APPROVED:

REVISIONS

REV	DATE	BY	COMMENTS
1	08-31-17	RM	EDITED NOTES AND CALLOUTS

SARATOGA SPRINGS CITY

1307 N. COMMERCE DR.
#200, SARATOGA SPRINGS, UT 84045
PHONE: 801-766-9793
FAX: 8017669794

STANDARD DETAILS

STREET STANDARDS

ST-19

NOTE:
SEE ST-21 FOR CROSS SECTIONS

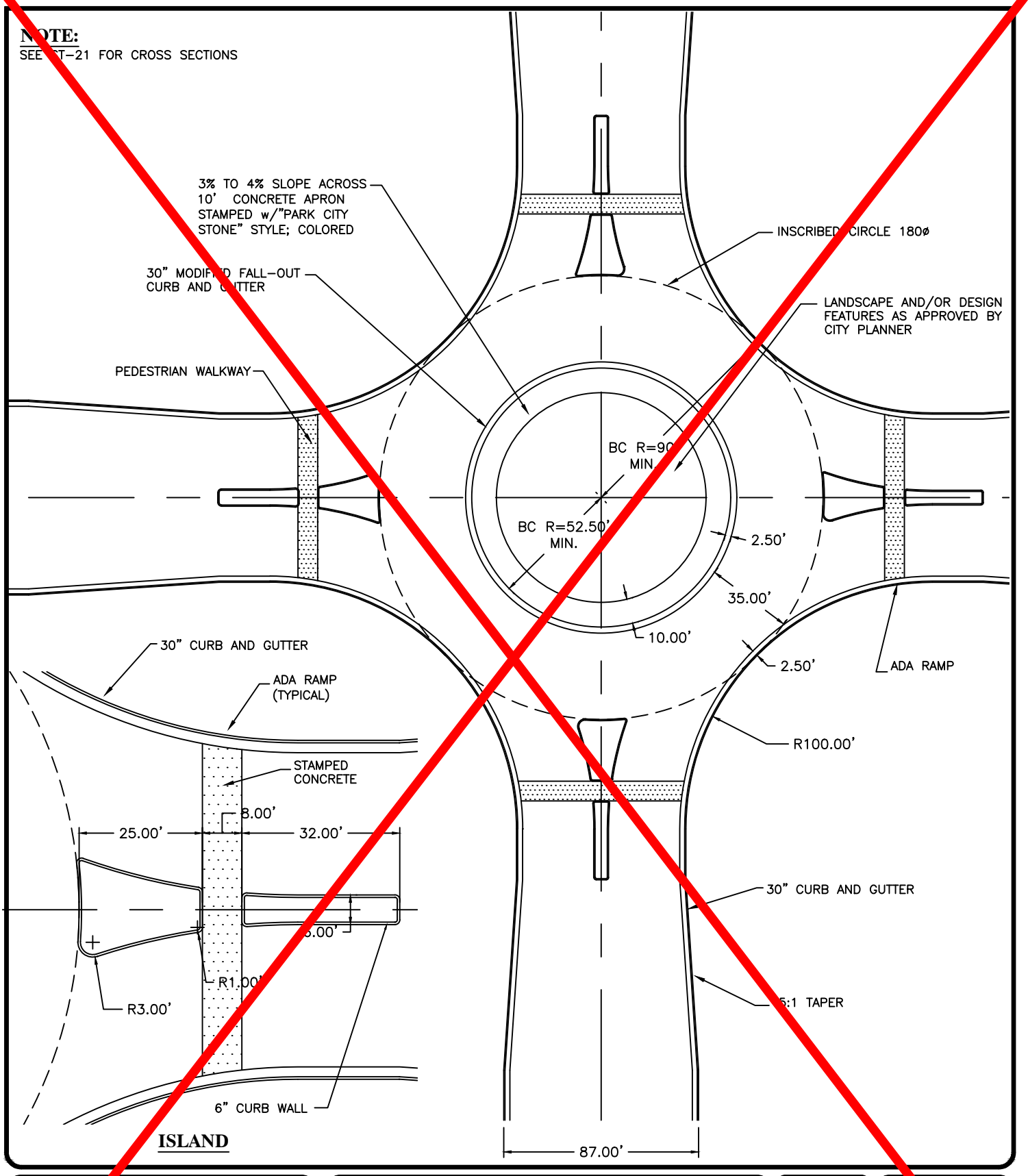

ISLAND

ROUND-ABOUT MAJOR ARTERIAL 180' RIGHT-OF-WAY

DATE:	APRIL 2018
DRAWING NAME:	ST-20
DRAWN BY:	ETL
CHECKED:	APPROVED:

REVISIONS

REV	DATE	BY	COMMENTS
1	08-31-17	RM	EDITED NOTES AND CALLOUTS

SARATOGA SPRINGS CITY

1307 N. COMMERCE DR.
#200, SARATOGA SPRINGS, UT 84045
PHONE: 801-766-9793
FAX: 8017669794

STANDARD DETAILS

STREET STANDARDS

ST-20

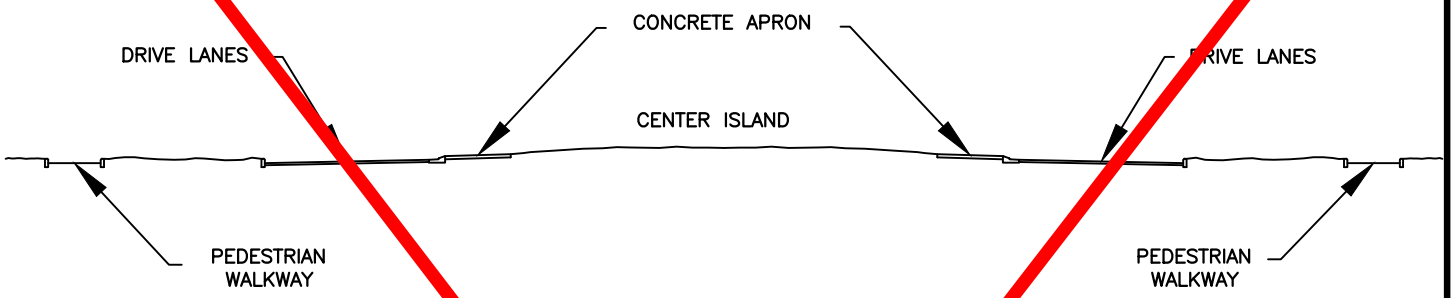

FULL CROSS SECTION

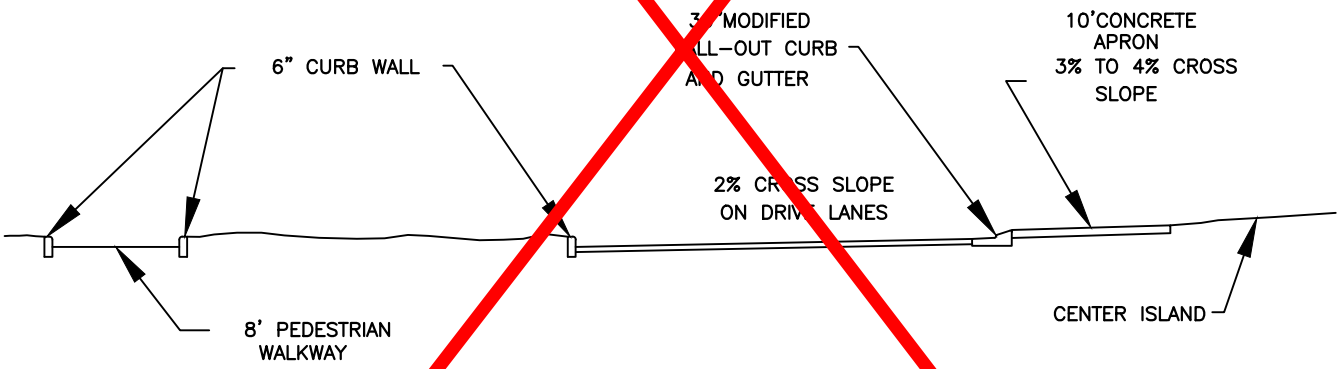

HALF WIDTH CROSS SECTION

ROUND-ABOUT TYPICAL CROSS SECTION

DATE: APRIL 2018

DRAWING NAME: ST-21

DRAWN BY: ETL

CHECKED: APPROVED:

REVISIONS

REV	DATE	BY	COMMENTS

SARATOGA SPRINGS CITY

1307 N. COMMERCE DR.
#200, SARATOGA SPRINGS,
UT 84045
PHONE: 801-766-9793
FAX: 8017669794

STANDARD DETAILS

STREET STANDARDS

ST-21

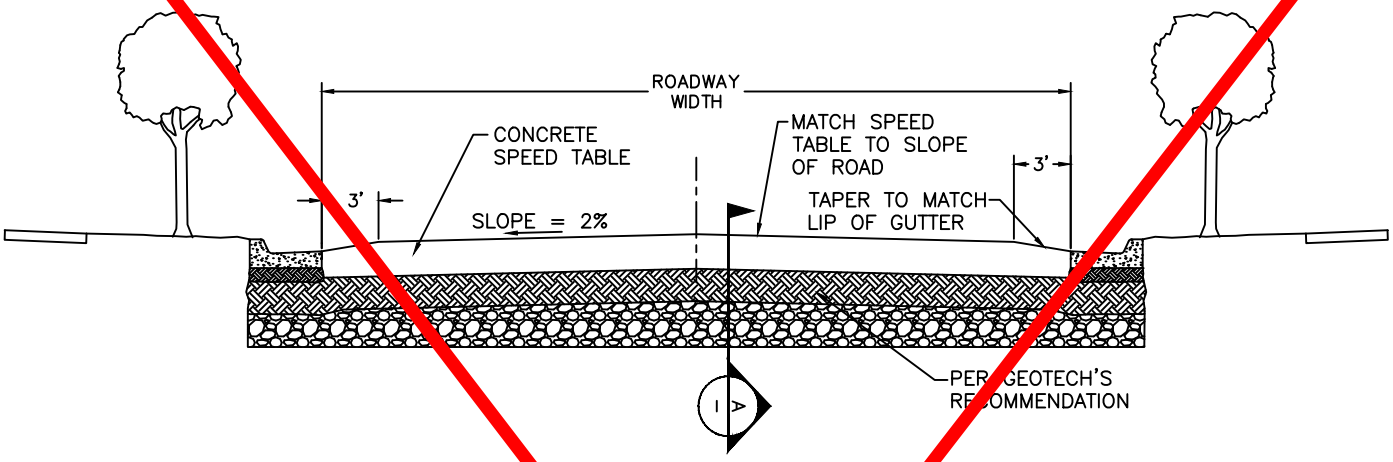

TYPICAL - CROSS SECTION

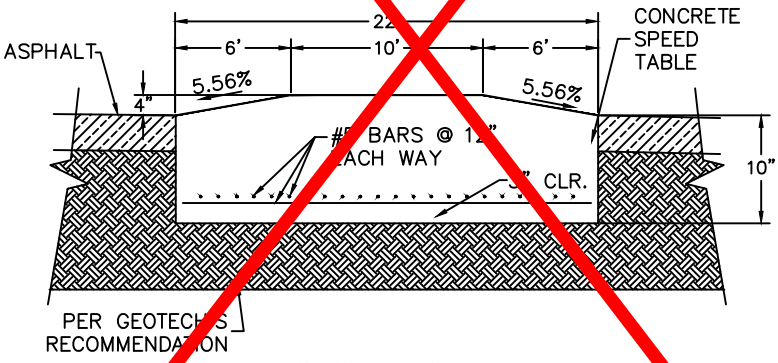

SECTION A

NTS

SPEED TABLE

DATE:	APRIL 2018
DRAWING NAME:	ST-22
DRAWN BY:	ETL
CHECKED:	APPROVED:

REVISIONS

REV	DATE	BY	COMMENTS

SARATOGA SPRINGS CITY

1307 N. COMMERCE DR.
#200, SARATOGA SPRINGS,
UT 84045
PHONE: 801-766-9793
FAX: 8017669794

STANDARD DETAILS

STREET STANDARDS

ST-22

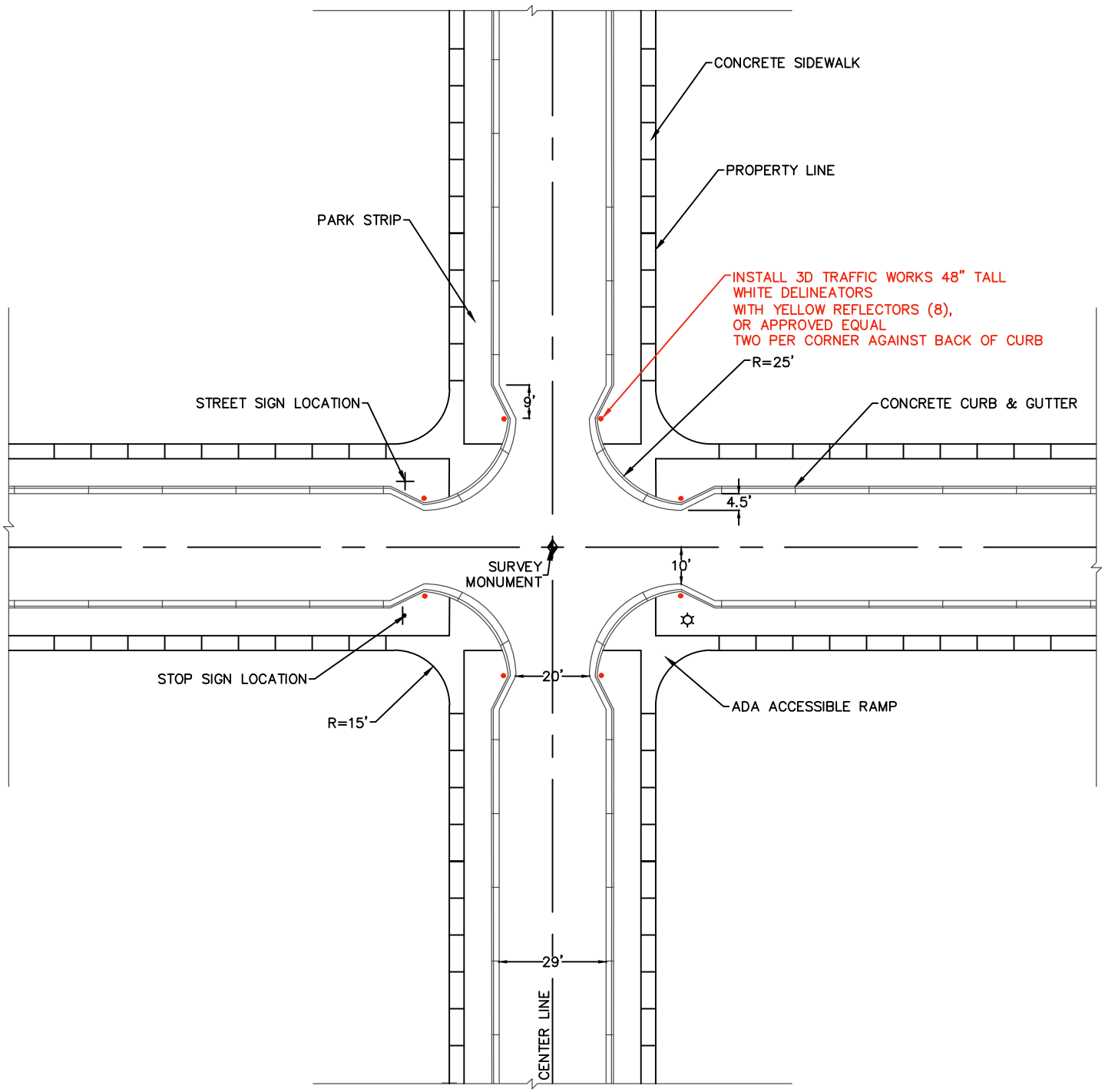

LOCAL STREET TRAFFIC CALMING INTERSECTION

DATE: AUGUST 2017

DRAWING NAME: ST-23

DRAWN BY: RFM

CHECKED:

APPROVED:

REVISIONS

REVISION	DATE	BY	COMMENTS
1	08-31-17	RM	EDITED DIMENSIONS

SARATOGA SPRINGS CITY

1307 N. COMMERCE DR.
#200, SARATOGA SPRINGS,
UT 84045
PHONE: 801-766-9793
FAX: 801-766-9794

STANDARD DETAILS

STREET STANDARDS

ST-23

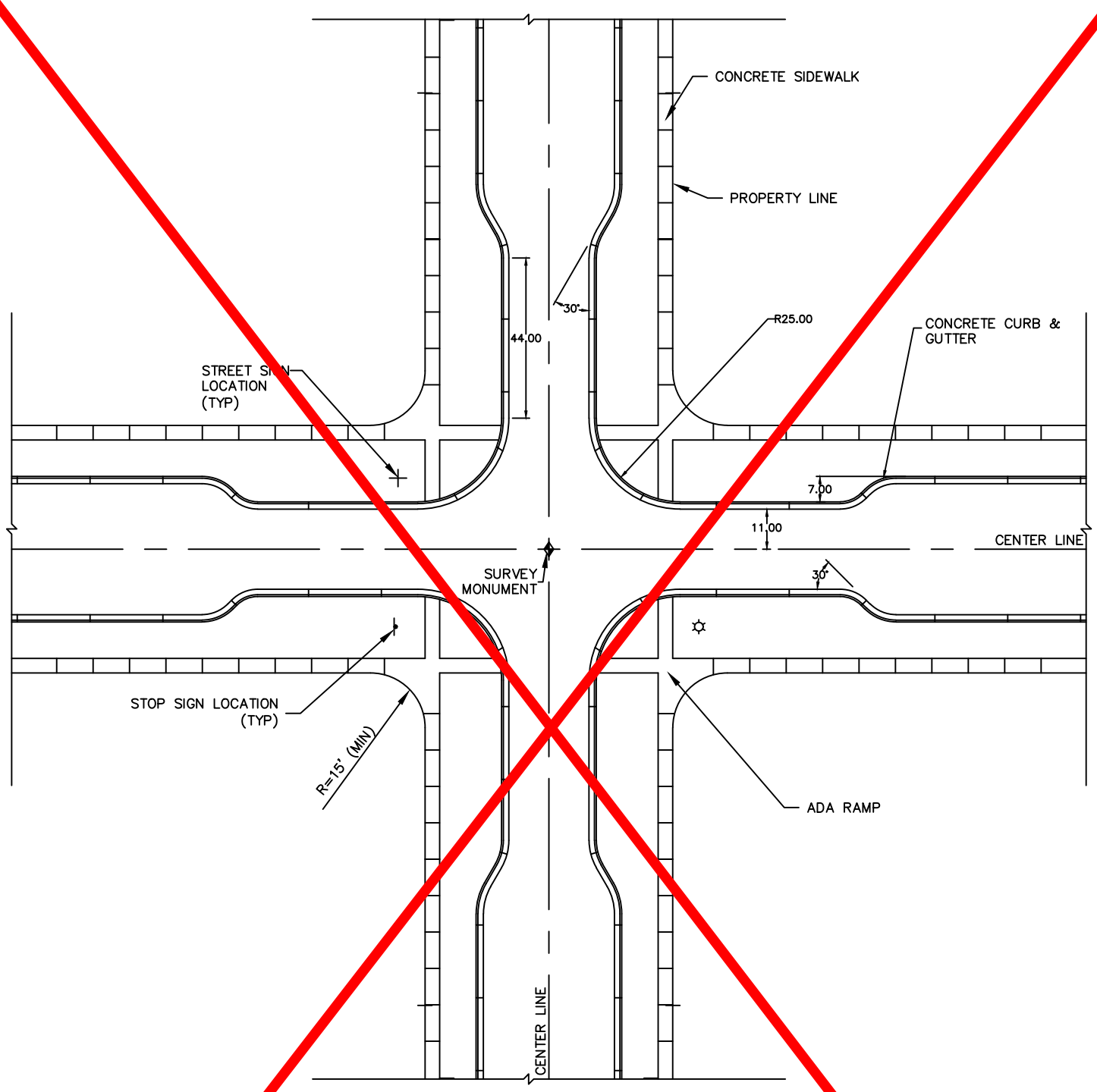

NOTES:

1. LAND DRAINS ARE UNACCEPTABLE UNLESS EXPLICITLY ALLOWED BY CITY ENGINEER. WHEN ALLOWED, PIPES SHALL NOT BE PERFORATED OR DESIGNED TO ACCEPT WATER WITHIN THE STREET RIGHT-OF-WAY.

2. CHECK ALL CITY STANDARDS FOR UTILITY LOCATIONS.

77' RIGHT-OF-WAY NECKED INTERSECTION

DATE: APRIL 2018

DRAWING NAME: ST-24

DRAWN BY: ETL

CHECKED: APPROVED:

REVISIONS

REV	DATE	BY	COMMENTS
1	08-31-17	RM	EDITED CALLOUTS

SARATOGA SPRINGS CITY

1307 N. COMMERCE DR.
#200, SARATOGA SPRINGS,
UT 84045
PHONE: 801-766-9793
FAX: 8017669794

STANDARD DETAILS

STREET STANDARDS

ST-24

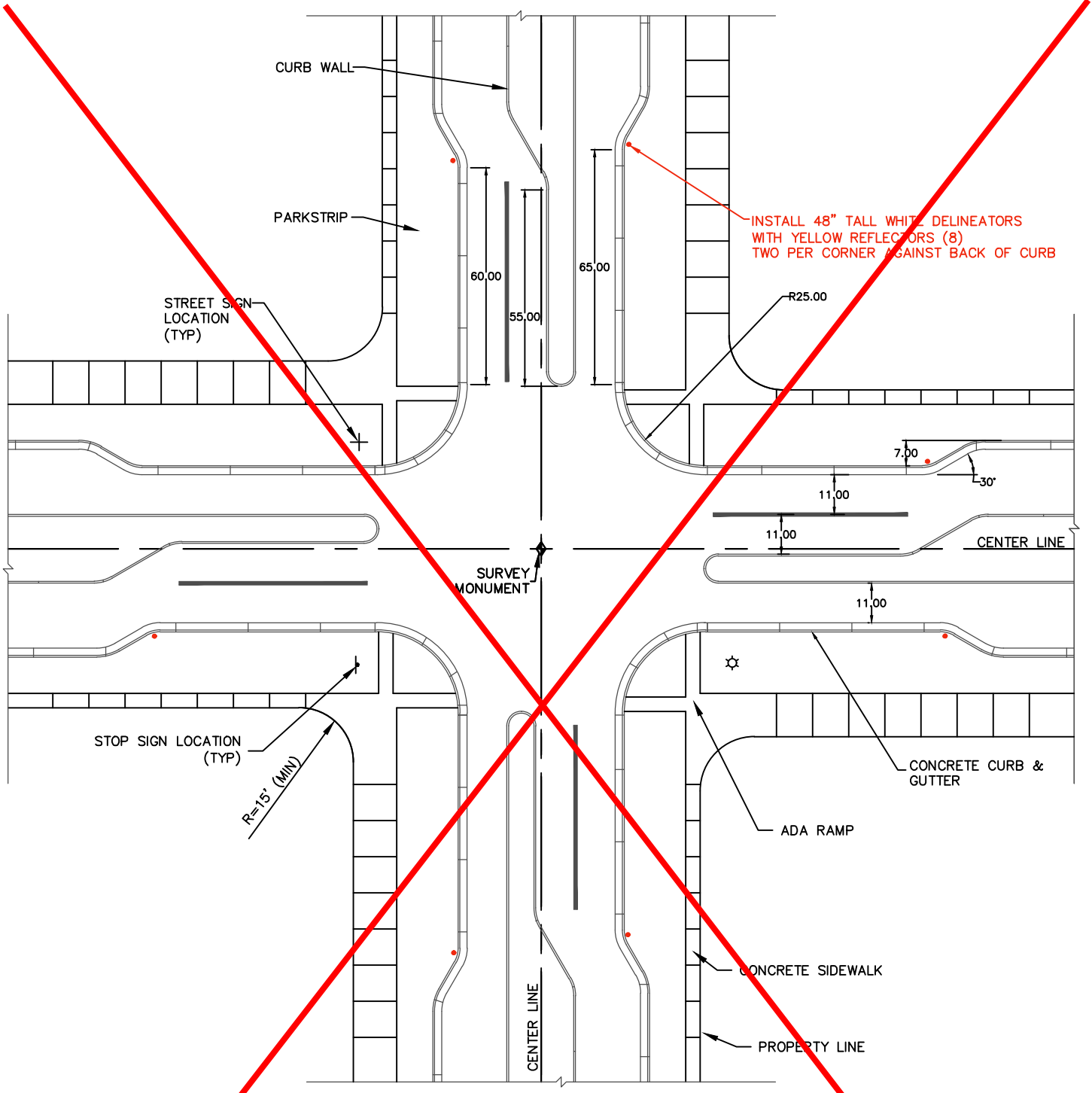

NOTES:

1. LAND DRAINS ARE UNACCEPTABLE UNLESS EXPLICITLY ALLOWED BY CITY ENGINEER. WHEN ALLOWED, PIPES SHALL NOT BE PERFORATED OR DESIGNED TO ACCEPT WATER WITHIN THE STREET RIGHT-OF-WAY.

2. CHECK ALL CITY STANDARDS FOR UTILITY LOCATIONS.

95' RIGHT-OF-WAY NECKED INTERSECTION

DATE:	AUGUST 2017
DRAWING NAME:	ST-25
DRAWN BY:	ETL
CHECKED:	
APPROVED:	

REVISIONS

REVISION	DATE	BY	COMMENTS

SARATOGA SPRINGS CITY

1307 N. COMMERCE DR.
#200, SARATOGA SPRINGS,
UT 84045
PHONE: 801-766-9793
FAX: 801-766-9794

STANDARD DETAILS

STREET STANDARDS

ST-25

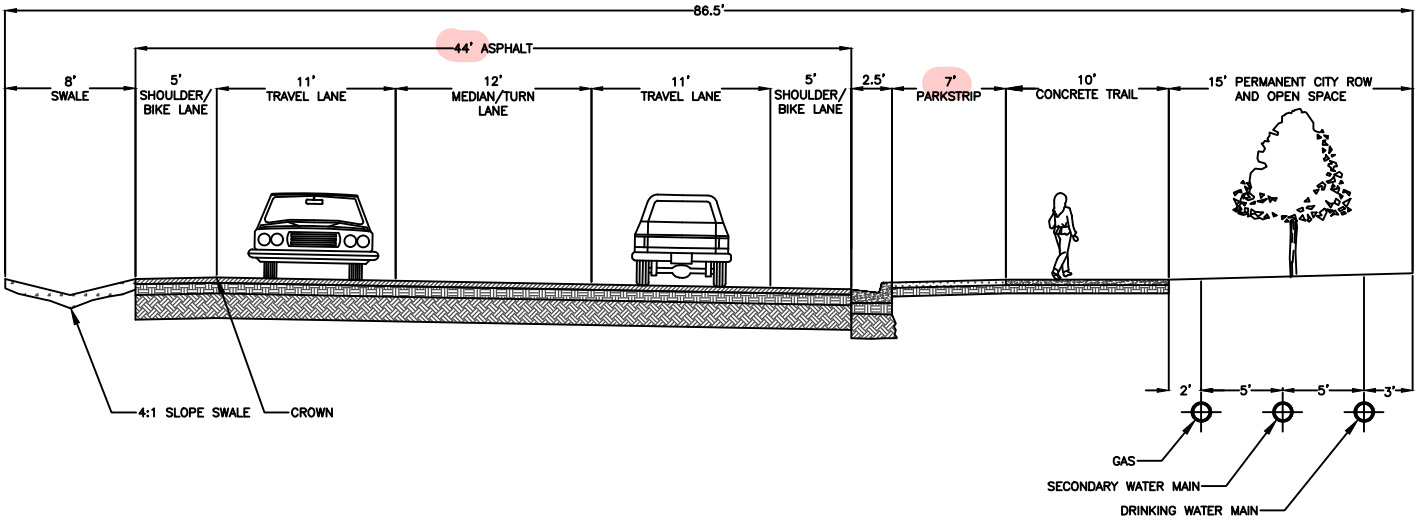

FOOTHILL INTERIM COLLECTOR ROADWAY

DATE:	JUNE 2019
DRAWING NAME:	ST-9*
DRAWN BY:	JRP
CHECKED:	
APPROVED:	

REVISIONS

REVISION	DATE	BY	COMMENTS

SARATOGA SPRINGS CITY

1307 N. COMMERCE DR.
#200, SARATOGA SPRINGS,
UT 84045
PHONE: 801-766-9793
FAX: 801-766-9794

STANDARD DETAILS

STREET STANDARDS

ST-9B

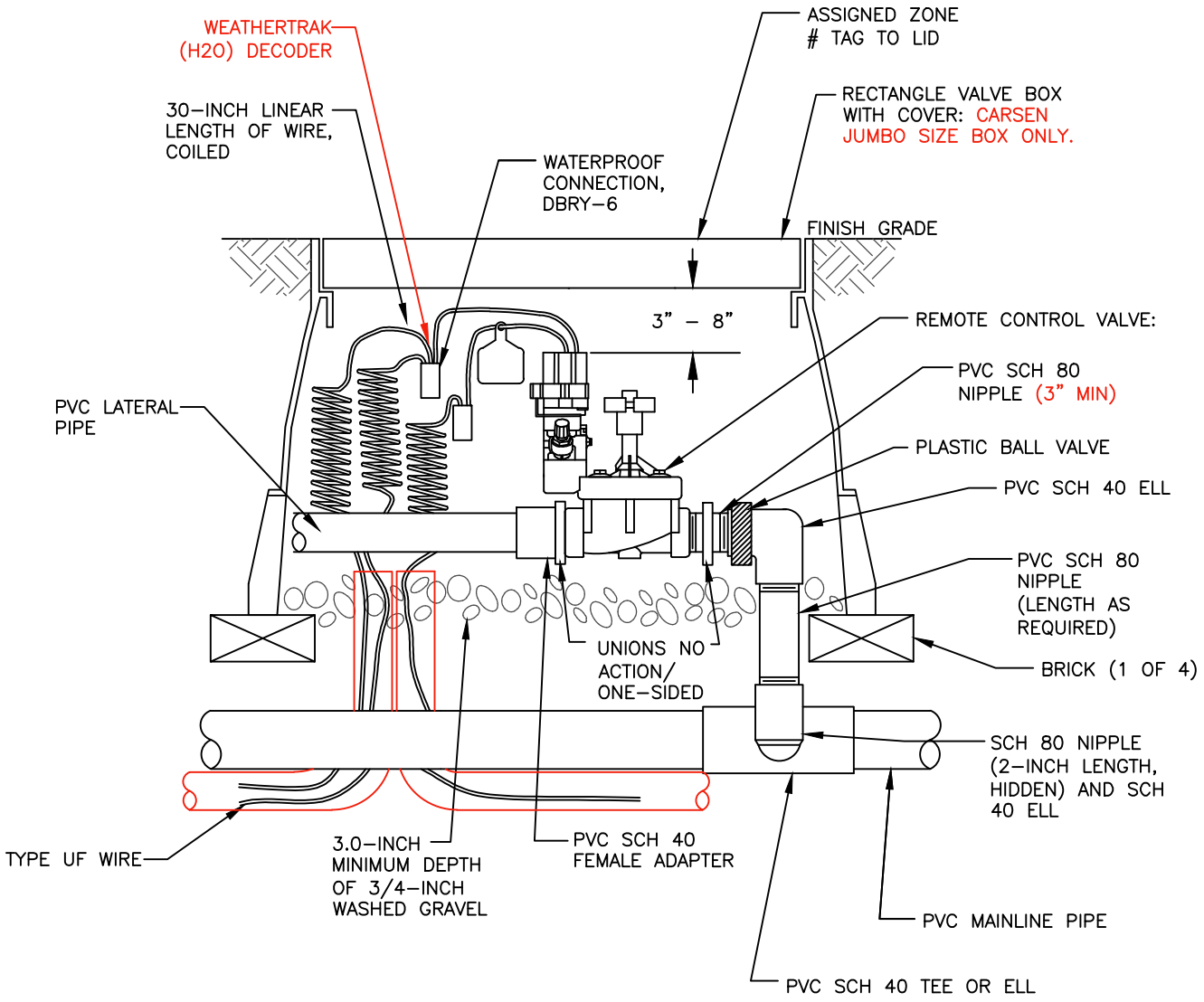

NOTES:

1. NO MALE ADAPTORS.
2. 1 VALVE PER BOX.

SPRINKLER SYSTEM REMOTE CONTROL VALVE

DATE: AUGUST 2017

DRAWING NAME: LS-3

DRAWN BY: ETL

CHECKED: APPROVED:

REVISIONS

REVISION	DATE	BY	COMMENTS
1	08-31-17	RM	EDITED NOTES AND CALLOUTS

SARATOGA SPRINGS CITY

1307 N. COMMERCE DR. #200, SARATOGA SPRINGS, UT 84045
PHONE: 801-766-9793
FAX: 801-766-9794

STANDARD DETAILS

LANDSCAPING

LS-3

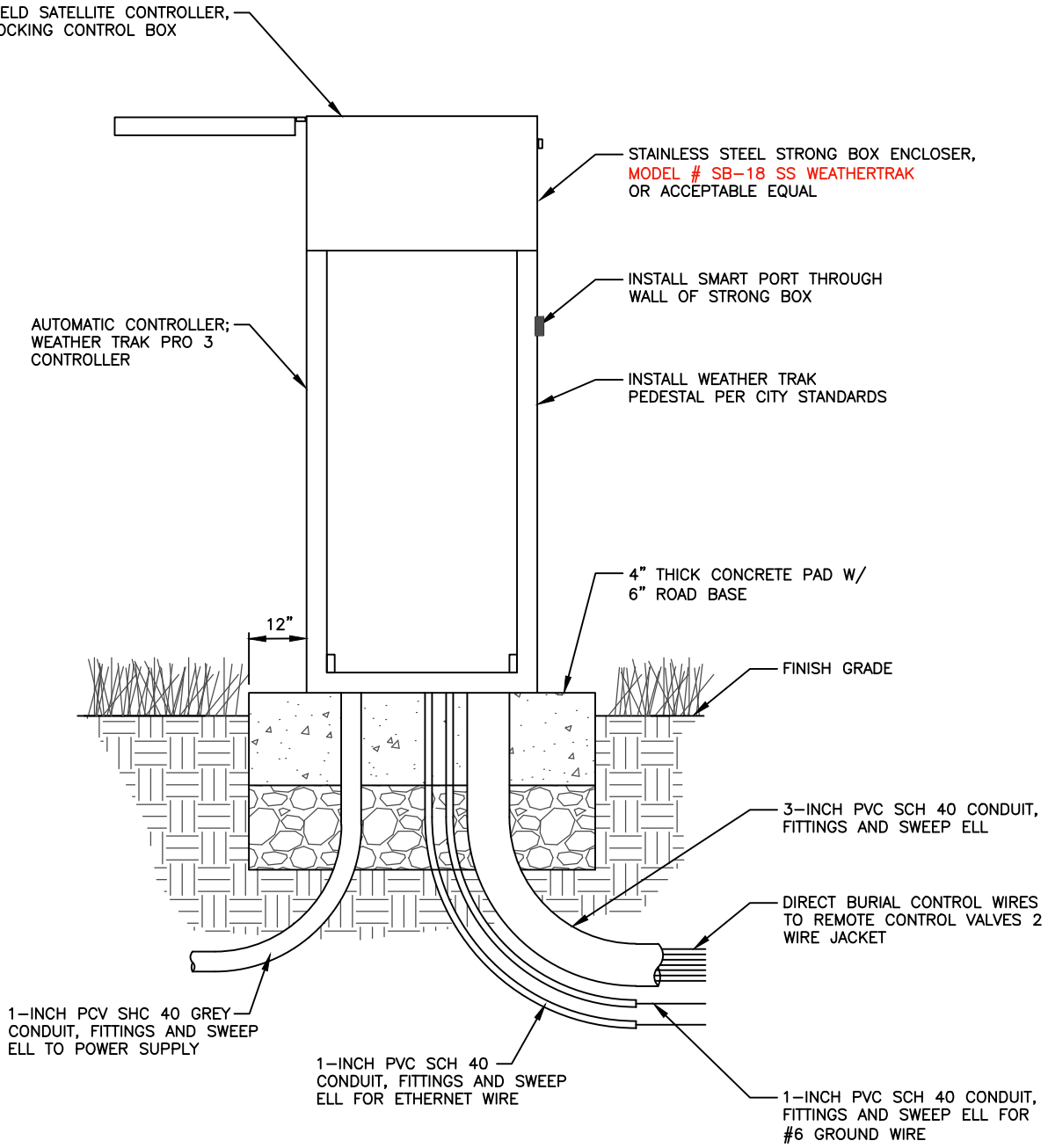

NOTE:

INSTALL WEATHER TRAK PRO 3, WITH ALL COMPONENTS FOR CENTRAL CONTROL AND 2 WIRE DECODER OPERATION (PRO 3, 2 WIRE SINGLE STATION DECODER).

SATELLITE STAINLESS STEEL CONTROLLER ENCLOSURE

DATE: AUGUST 2017

DRAWING NAME: LS-5

DRAWN BY: ETL

CHECKED:

APPROVED:

REVISIONS

REVISION	DATE	BY	COMMENTS
1	08-31-17	RM	EDITED NOTES AND CALLOUTS

SARATOGA SPRINGS CITY

1307 N. COMMERCE DR. #200, SARATOGA SPRINGS, UT 84045
PHONE: 801-766-9793
FAX: 801-766-9794

STANDARD DETAILS

LANDSCAPING

LS-5

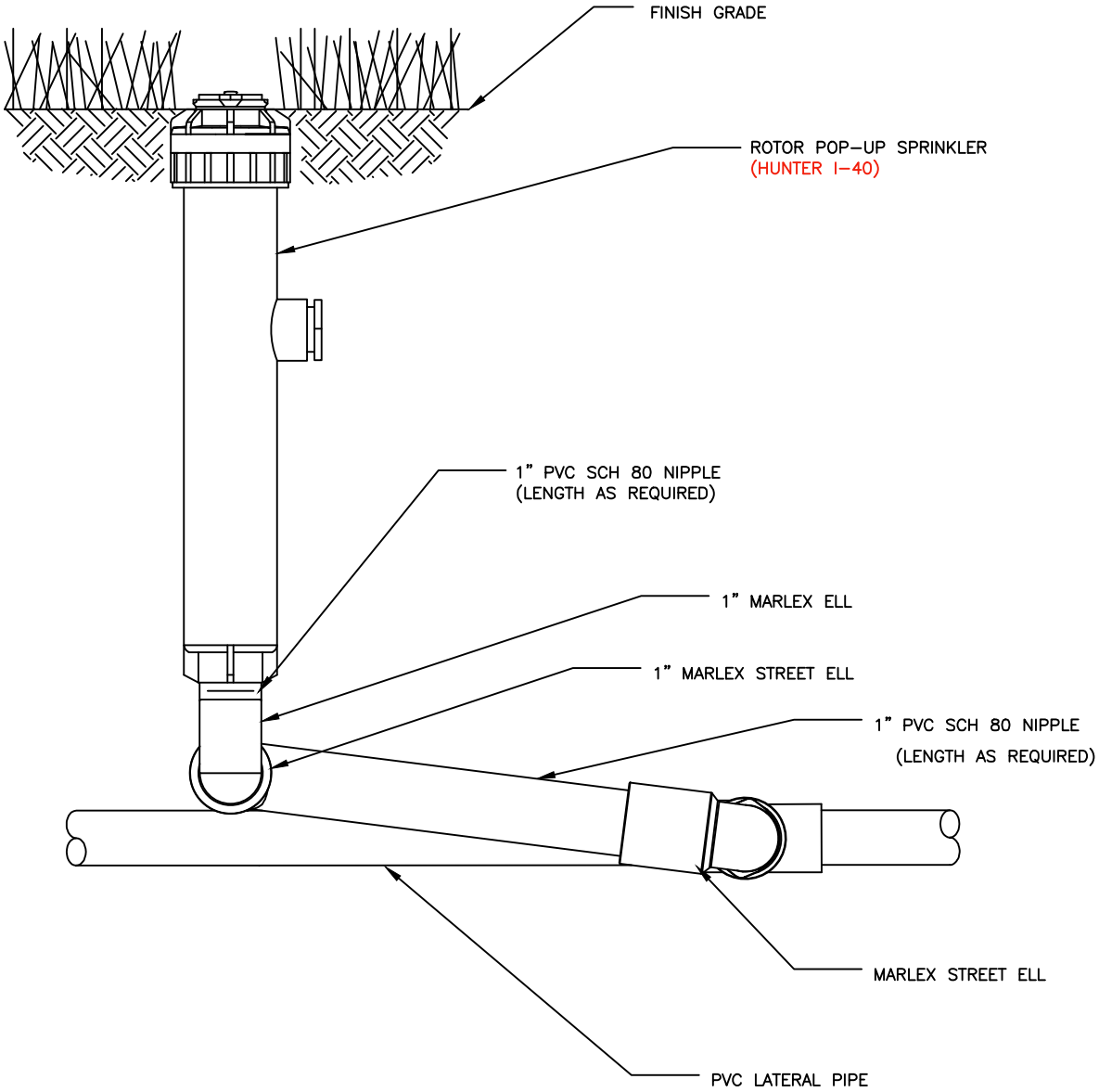

NOTE:

1. USE MARLEX STREET ELL
2. USE OF TEFLON TAPE OR PIPE DOPE IS NOT PERMITTED ON MARLEX STREET ELLS

SPRINKLER SYSTEM LARGE AREA ROTARY HEAD

DATE: AUGUST 2017

DRAWING NAME: LS-6

DRAWN BY: ETL

CHECKED: APPROVED:

REVISIONS

REVISION	DATE	BY	COMMENTS
1	08-31-17	RM	EDITED CALLOUTS

SARATOGA SPRINGS CITY

1307 N. COMMERCE DR.
#200, SARATOGA SPRINGS,
UT 84045
PHONE: 801-766-9793
FAX: 801-766-9794

STANDARD DETAILS

LANDSCAPING

LS-6

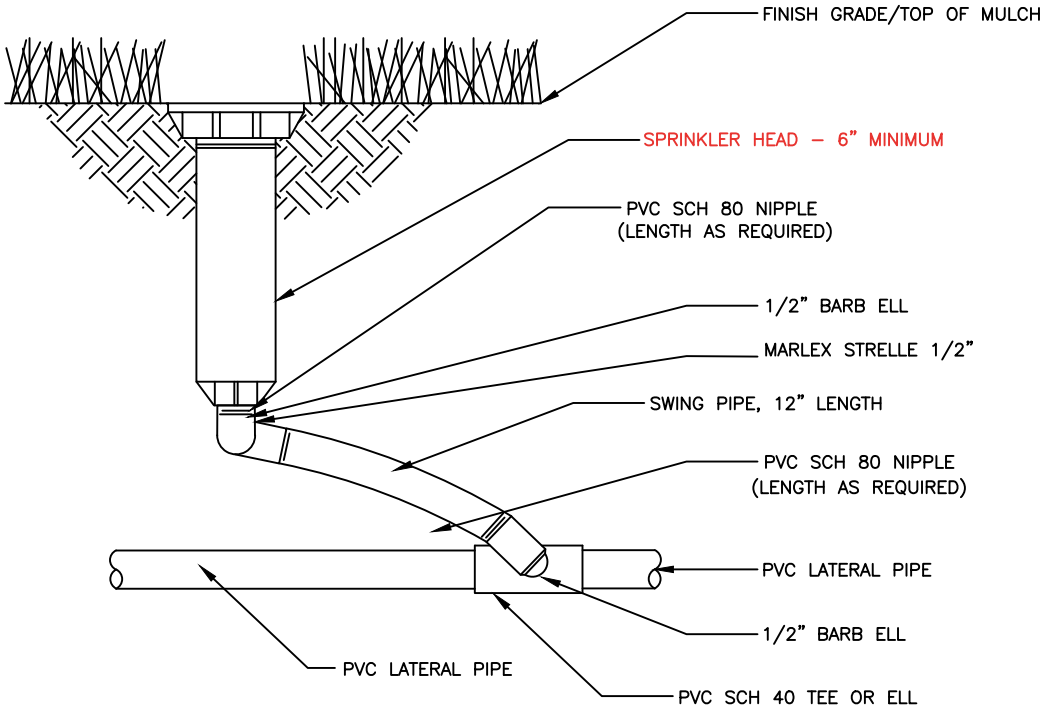

ROTORS FOR MEDIUM AND SMALL AREAS:

HUNTER I–20 @ 30' MAXIMUM SPACING.

SPRAY HEADS FOR SMALL AREAS:

RAINBIRD #1806 FOR TURF AREAS, #1812 FOR SHRUB BEDS.

HUNTER 6" PRO–SPRAY FOR TURF AREAS, 12" PRO–SPRAY (BOTTOM INLET ONLY) FOR SHRUB BEDS. NO SIDE OUTLETS

MEDIUM AND SMALL AREA SPRINKLER HEAD

DATE: AUGUST 2017

DRAWING NAME: LS-7

DRAWN BY: ETL

CHECKED: APPROVED:

REVISIONS

REVISION	DATE	BY	COMMENTS
1	08-31-17	RM	EDITED NOTES & CALLOUTS

SARATOGA SPRINGS CITY

1307 N. COMMERCE DR.
#200, SARATOGA SPRINGS,
UT 84045
PHONE: 801-766-9793
FAX: 801-766-9794

STANDARD DETAILS

LANDSCAPING

LS-7

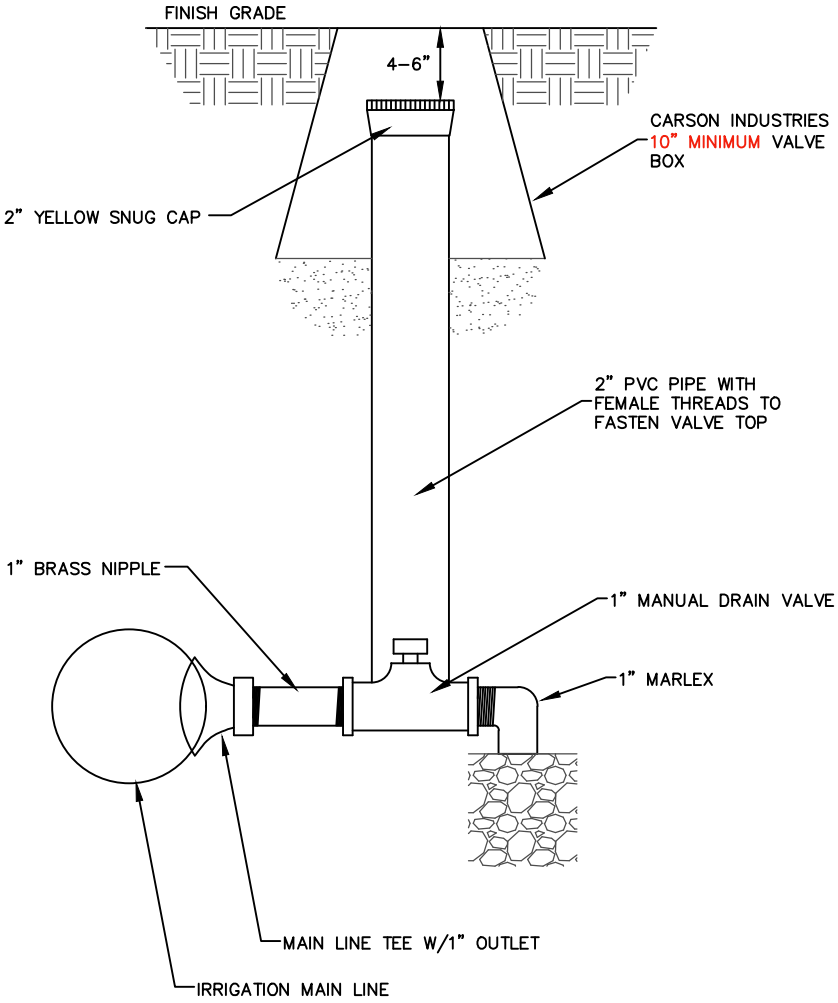

SPRINKLER SYSTEM MANUAL DRAIN

DATE:	AUGUST 2017
DRAWING NAME:	LS-8
DRAWN BY:	ETL
CHECKED:	APPROVED:

REVISIONS

REVISION	DATE	BY	COMMENTS
1	08-31-17	RM	EDITED CALLOUTS

SARATOGA SPRINGS CITY

1307 N. COMMERCE DR.
#200, SARATOGA SPRINGS,
UT 84045
PHONE: 801-766-9793
FAX: 801-766-9794

STANDARD DETAILS

LANDSCAPING

LS-8

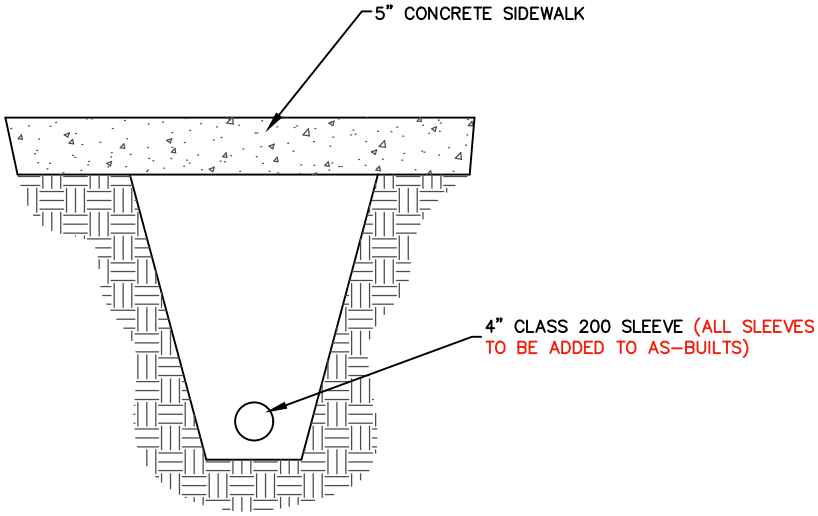

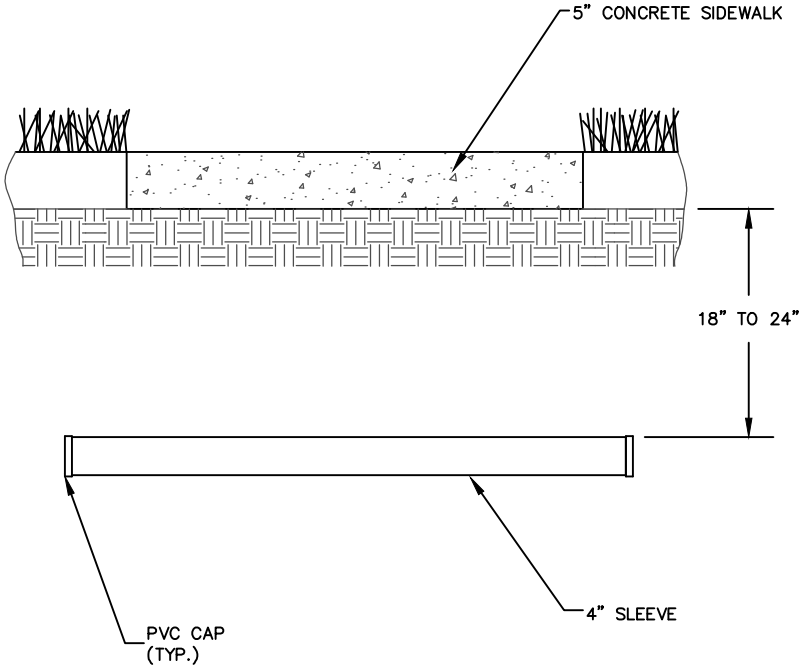

NOTES:

1. ONE WATER LINE PER SLEEVE.
2. ELECTRICITY AND WATER NOT TO SHARE SLEEVES.

SPRINKLER SYSTEM SLEEVING

DATE:	AUGUST 2017
DRAWING NAME:	LS-9
DRAWN BY:	ETL
CHECKED:	APPROVED:

REVISIONS

REVISION	DATE	BY	COMMENTS

SARATOGA SPRINGS CITY

1307 N. COMMERCE DR.
#200, SARATOGA SPRINGS,
UT 84045
PHONE: 801-766-9793
FAX: 801-766-9794

STANDARD DETAILS

LANDSCAPING

LS-9

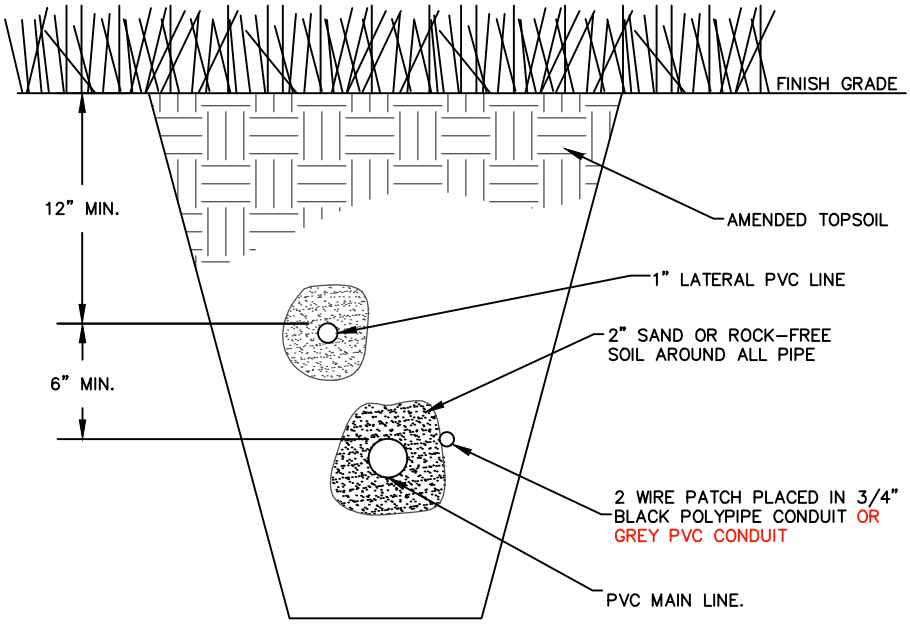

SPRINKLER SYSTEM PIPE/TRENCH

DATE: AUGUST 2017

DRAWING NAME: LS-10

DRAWN BY: ETL

CHECKED: APPROVED:

REVISIONS

REVISION	DATE	BY	COMMENTS
1	08-31-17	RM	EDITED CALLOUTS, ADDED POLYPIPE CONDUIT AND CALLOUT

SARATOGA SPRINGS CITY

1307 N. COMMERCE DR.
#200, SARATOGA SPRINGS,
UT 84045
PHONE: 801-766-9793
FAX: 801-766-9794

STANDARD DETAILS

LANDSCAPING

LS-10

SECTION VIEW

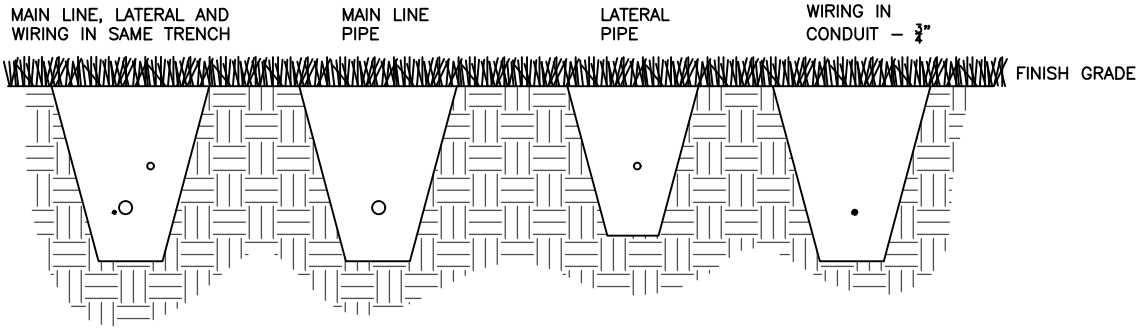

PLAN VIEW

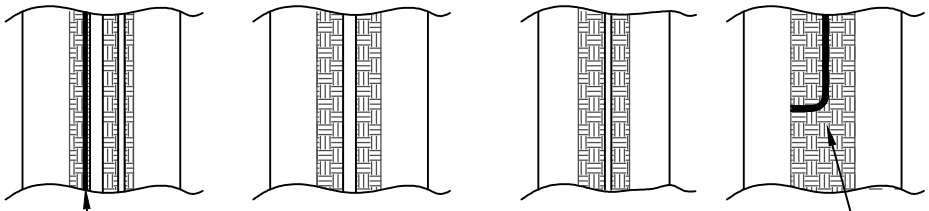

ADD A CONDUIT SWEEP AT EVERY CHANGE IN DIRECTION

RUN WIRING BENEATH AND BESIDE MAIN LINE. BUNDLE AT 10' INTERVALS IN CONDUIT.

NOTES:

1. SLEEVE BELOW ALL HARDSCAPE ELEMENTS WITH CLASS 200 PVC TWICE THE DIAMETER OF THE PIPE OR WIRE BUNDLE WITHIN.
2. FOR PIPE AND WIRE BURIAL DEPTHS DETAILS. SEE SPECS.
3. ELECTRIC AND WATER NOT TO SHARE SLEEVES.

SPRINKLER SYSTEM PIPE AND WIRE TRENCH

DATE: AUGUST 2017

DRAWING NAME: LS-11

DRAWN BY: ETL

CHECKED: APPROVED:

REVISIONS

REVISION	DATE	BY	COMMENTS
1	08-31-17	RM	EDITED CALLOUTS

SARATOGA SPRINGS CITY

1307 N. COMMERCE DR. #200, SARATOGA SPRINGS, UT 84045
PHONE: 801-766-9793
FAX: 801-766-9794

STANDARD DETAILS

LANDSCAPING

LS-11

This is a new standard drawing proposed for consideration.

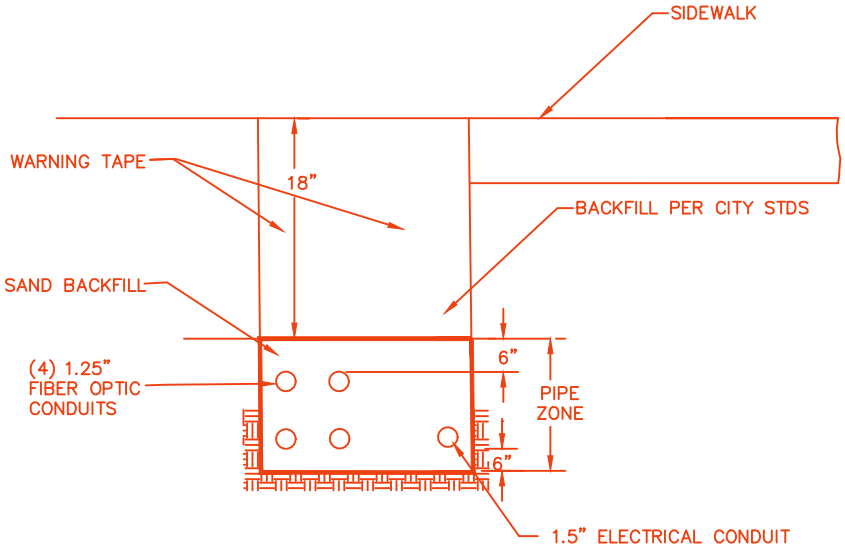

CROSS-SECTION: 1-D TRENCH

CONDUIT: FIBER OPTIC/COMMUNICATION

DATE:	MAY 2020
DRAWING NAME:	ST-40
DRAWN BY:	JRP
CHECKED:	APPROVED:

REVISIONS

REVISION	DATE	BY	COMMENTS

SARATOGA SPRINGS CITY

1307 N. COMMERCE DR.
#200, SARATOGA SPRINGS,
UT 84045
PHONE: 801-766-9793
FAX: 801-766-9794

STANDARD DETAILS

STREET STANDARDS

ST-40

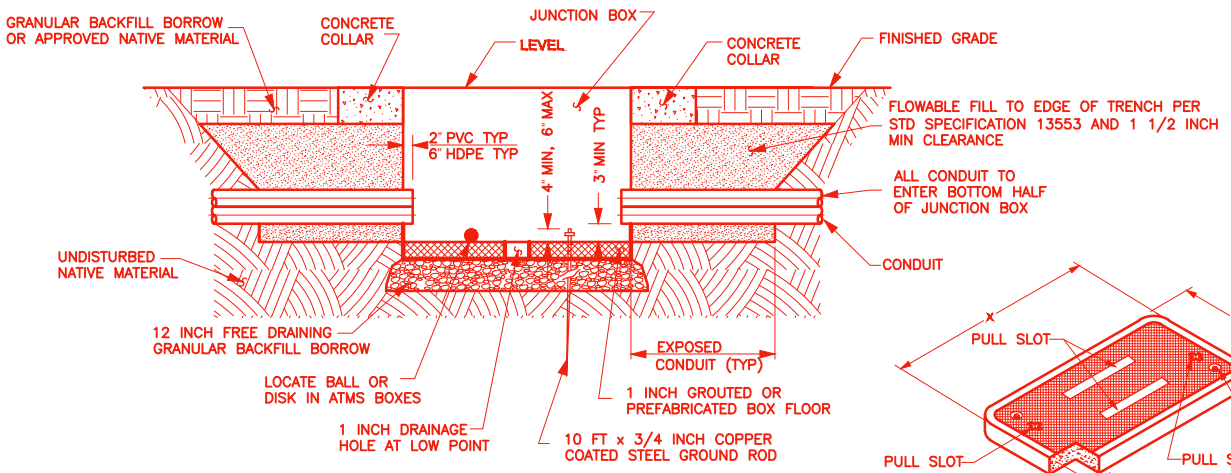

JUNCTION BOX CONDUIT PENETRATION DETAIL

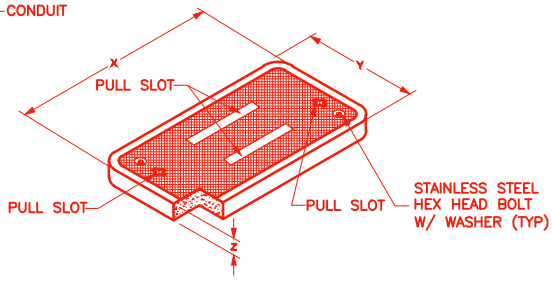

This is a new standard drawing proposed for consideration.

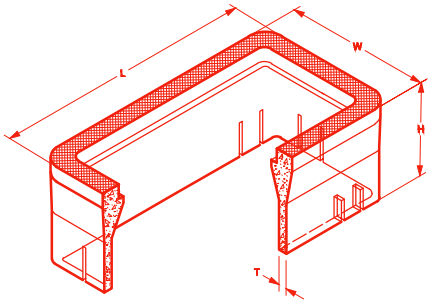

BOX AND LID DIMENSION

BOX TYPE	"H" inch	"L" inch	"T" inch	"W" inch	"X" inch	"Y" inch	"Z" inch
I-PC	24	25	1 ½	16	23 ¼	13 ¾	2
II-PC	24	37 ⅝	1 ½	28	35 ⅝	24	3
III-PC	24	49 ⅝	2	32 ¼	47 ⅝	30 ½	3

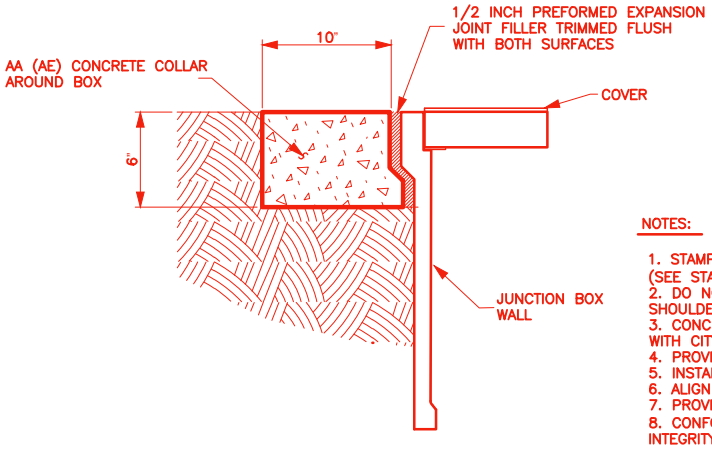

NOTES:

1. STAMP BOX AND LOGO INTO THE LID FROM THE FACTORY. (SEE STANDARD SPECIFICATION 05133)
2. DO NOT PLACE JUNCTINO BOXES IN THE TRAVELED WAY OR ON THE FREEWAY SHOULDERS.
3. CONCRETE COLLAR WIDTH VARIES WHEN ADJACENT TO OTEHR IMPROVEMENTS. CONSULT WITH CITY INSPECTOR AS REQUIRED.
4. PROVIDE CONCRETE COLLARS EXCEPT WITHIN CONCRETE PAVED AREAS.
5. INSTALL CONDUIT PLUG PER STANDARD SPECIFICATION 05133.
6. ALIGN ATMS CONDUIT BY COLOR ON EACH SIDE OF THE JUNCTION BOX.
7. PROVIDE TYPE III-PC JUNCTINO BOXES WITH A SPLIT LID.
8. CONFORM TO ANSI/SCTE-77 2007 SPECIFICATION FOR UNDERGROUND ENCLOSURE INTEGRITY TIER 22 LOADING FOR ALL JUNCTION BOXES.

JUNCTION BOX CONCRETE COLLAR DETAIL

POLYMER CONCRETE JUNCTION BOX

DATE:	MAY 2020
DRAWING NAME:	ST-39
DRAWN BY:	JRP
CHECKED:	APPROVED:

REVISIONS

REVISION	DATE	BY	COMMENTS

SARATOGA SPRINGS CITY

1307 N. COMMERCE DR. #200, SARATOGA SPRINGS, UT 84045
PHONE: 801-766-9793
FAX: 801-766-9794

STANDARD DETAILS

STREET STANDARDS

ST-39

NOTES:

1. WHERE OVERHEAD POWER LINES WILL REMAIN, THE HEIGHT OF THE POLE MAY BE REDUCED TO THE MINIMUM CLEAR DISTANCE SPECIFIED BY THE POWER COMPANY.
2. ADDITIONAL UDOT REQUIREMENTS MAY APPLY.
3. ALTERNATIVE PRODUCTS MAY BE SUBSTITUTED IF DEEMED TO BE EQUAL AND APPROVED BY THE CITY.

This is a new standard drawing proposed for consideration.

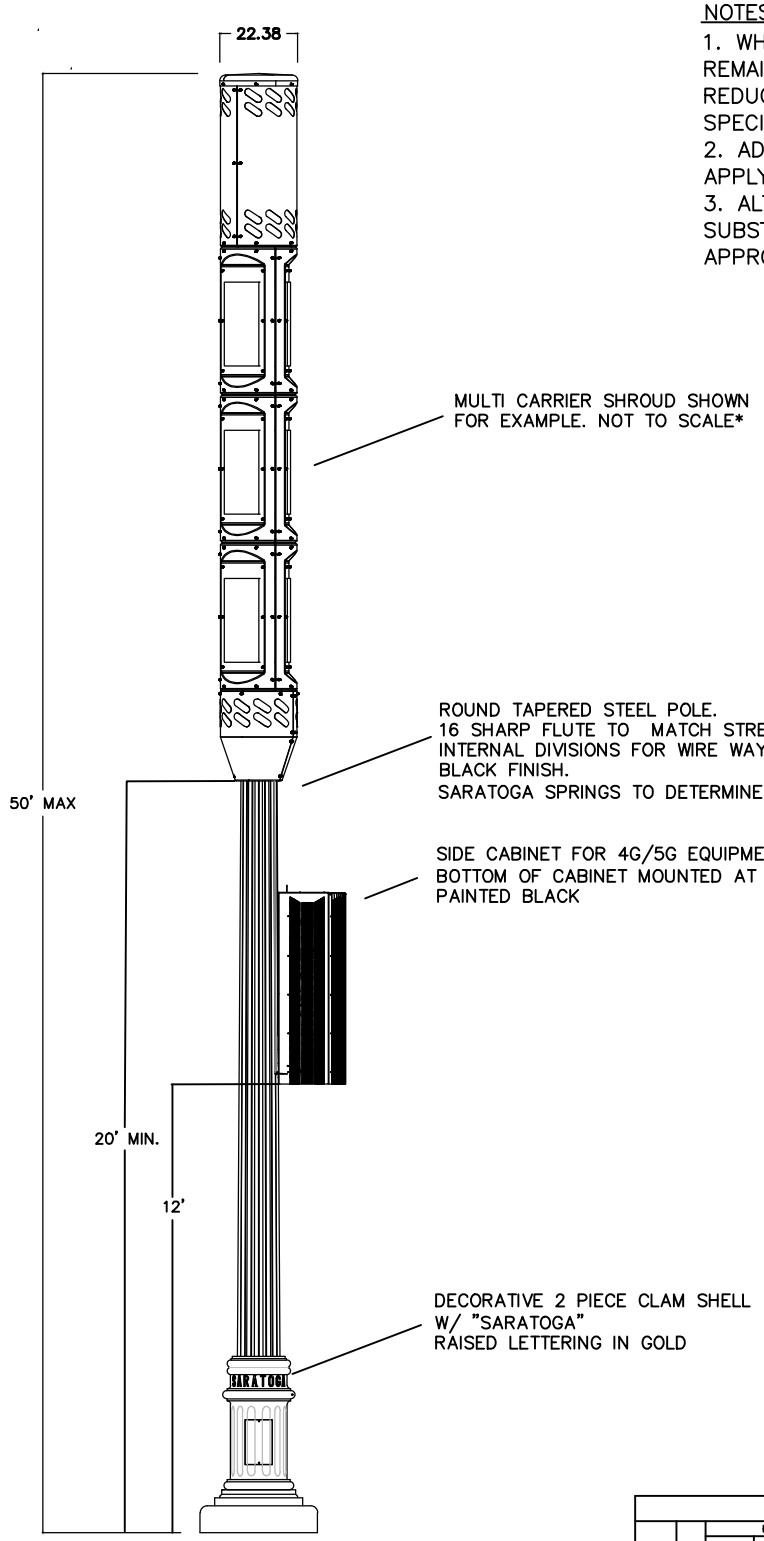

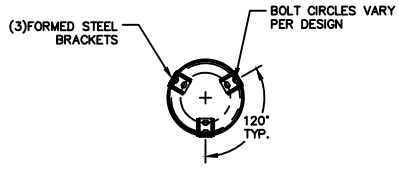

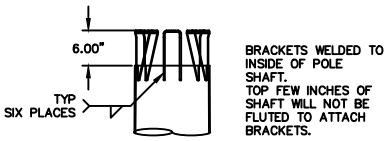

INTERNAL DIVIDERS

POLE DATA

ITEM	QTY.	POLE TUBE				POLE BASE				ANCHOR BOLT			
		BASE DIA. (IN)	TOP DIA. (IN)	LENGTH (FT)	GAUGE OR THK. (IN)	SQUARE "S" (IN)	BOLT CIRCLE "Y" (IN)	THK. "M" (IN)	HOLE "Z" (IN)	DIA. "K" (IN)	LENGTH "J" (IN)	HOOK OR THREAD "H" (IN)	THREAD LENGTH "U" (IN)
1	1	13.00	10.20	20.00	7	18.00	17.00	1.50	1.50	1.25	42.00	6.00	6.00

WIRELESS SUPPORT STRUCTURE-MONOPOLE FOR SMALL CELL WIRELESS FACILITIES

DATE: OCTOBER 2018

DRAWING NAME: LP-6

DRAWN BY: JRP

CHECKED:

APPROVED:

REVISIONS

REV	DATE	BY	COMMENTS

SARATOGA SPRINGS CITY

1307 N. COMMERCE DR.
#200, SARATOGA SPRINGS, UT 84045
PHONE: 801-766-9793
FAX: 8017669794

STANDARD DETAILS

STREET LIGHTS

LP-6A

MINUTES – Planning Commission

Thursday, April 23, 2020
City of Saratoga Springs City Offices
1307 North Commerce Drive, Suite 200, Saratoga Springs, Utah 84045

PLANNING COMMISSION MEETING MINUTES - DRAFT

Call to Order - 6:00 p.m. by Chairman Troy Cunningham

Present: Via Video Conference

Commission Members: Bryce Anderson, Audrey Barton, Troy Cunningham, Ken Kilgore, Reed Ryan, Josh Wagstaff.

Staff: Dave Stroud, Planning Director; Gina Grandpre Planner II; Conrad Hafen, Assistant City Attorney; Gordon Miner, City Engineer; Jeff Pearson, Engineer II; Nicolette Fike, Deputy Recorder, David Johnson, Economic Development Director.

Others: Daniel Schmidt, Thomas Lehnardt, Lou Phung

1. **Pledge of Allegiance -** led by Commissioner Cunningham.

2. **Roll Call** – A quorum was present

3. **Business Item: Preliminary Plat for Saratoga Springs Commercial Plat E located west of 1303 N. Exchange Drive. Daniel Schmidt, WPI as applicant.**

Planner II Gina Grandpre presented the item. The proposed preliminary plat of Saratoga Springs Commercial Plat E contains one lot in the Regional Commercial zone. The lot size is 2.01 acres and .8 acres will be dedicated as a public right of way as Exchange Drive. Open space is not required in a commercial subdivision plat but the site plan is required to have a minimum of 20 percent landscaping. Daniel Schmidt was present as applicant. Planning Director Dave Stroud advised that it is up to the State DABC to determine compliance and so Planning Commission will not see the site plan.

Commissioner Kilgore

- Received confirmation from the applicant that they would comply with all conditions.

Commissioner Barton

- Inquired how street names are determined, more particularly regarding Exchange Drive. Planning Director Dave Stroud advised that Exchange Dr. was already an established street name which will continue.

Motion made by Commissioner Barton that the Planning Commission forward a recommendation of approval to the City Council regarding the preliminary plat of Saratoga Springs Commercial Plat E, located south of Crossroads Blvd, west of Exchange Drive based upon the Findings and Conditions in the Staff Report. Seconded by Commissioner Anderson.
Aye: Bryce Anderson, Audrey Barton, Troy Cunningham, Ken Kilgore, Reed Ryan, Josh Wagstaff. Motion passed 6 - 0.

4. **Business Item: Site Plan for Saratoga Springs Commercial Lot 402 & 403 located approximately 153 W. Crossroads Blvd., Daniel Schmidt, WPI as applicant.**

Planner II Gina Grandpre presented the item. The applicant is requesting approval of two Site Plans in the Saratoga Springs Commercial Plat D Subdivision. Daniel Schmidt was present as applicant. He noted that these are two lots within plat D, there will be more lots coming for this project; the road and these two lots should all be built together.

Commissioner Cunningham

- Asked about potential tenants. Daniel Schmidt responded that they have a number of tenants signing leases which he cannot name yet; they will promote themselves. They have seen a little bit of a slowdown

at this time but several tenants are willing to move forward, others may take longer. They anticipate at least these two buildings will be strong.

Commissioner Kilgore
- Received confirmation from the applicant that they would comply with all conditions.
- Received clarification on the compliance list from Planner II Gina Grandpre.

Commissioner Wagstaff
- Asked about the current General Plan, this area has not been updated on it yet. Economic Development Director David Johnson noted an update to the area had been made and the map may still need updated. Staff will follow up with this.

Motion made by Commissioner Ryan to approve the proposed site plan of the Saratoga Springs Commercial Lots 402 and 403 Retail Building at ~191 W. crossroads Blvd. in the Regional Commercial zone with the findings and conditions in the Staff Report. Seconded by Commissioner Kilgore.
Aye: Bryce Anderson, Audrey Barton, Troy Cunningham, Ken Kilgore, Reed Ryan, Josh Wagstaff. Motion passed 6 - 0.

5. **Approval of Minutes: March 26, 2020**

Commissioners Kilgore and Anderson noted typos in the minutes.

Motion made by Commissioner Anderson to approve the minutes of March 26, 2020. Seconded by Commissioner Barton. Aye: Bryce Anderson, Audrey Barton, Troy Cunningham, Ken Kilgore, Reed Ryan, Josh Wagstaff. Motion passed 6 - 0.

6. **Reports of Action.** – No Reports were needed.

7. **Commission Comments.**
Commissioner Barton inquired who named the streets. Planning Director Dave Stroud advised that for the most part it is the developer. Those are then approved along with the plats in Planning Commission and City Council.

8. **Director's Report.** – Planning Director Dave Stroud noted that most of the staff was working from home. Waiting to hear of any new Planning Commission applicants. In response to Commissioner Cunningham he advised next month's meeting should go forward as planned; continuing with the current video conference at least through May.
Commissioner Wagstaff asked for an updated General Plan map. Economic Development Director David Johnson advised it should be in the GIS map section and they will follow up with that.

9. **Possible motion to enter into closed session** – No closed session was held.

10. **Meeting Adjourned Without Objection at 6:24 p.m. by Chairman** Troy Cunningham.

_____ _____
Date of Approval Planning Commission Chair

_____
Deputy City Recorder

DRAFT

MINUTES – Planning Commission

Thursday, May 14, 2020
City of Saratoga Springs City Offices
1307 North Commerce Drive, Suite 200, Saratoga Springs, Utah 84045

PLANNING COMMISSION MEETING MINUTES

Call to Order - 6:00 p.m. by Chairman Troy Cunningham

Present: Via Video Conference

Commission Members: Bryce Anderson, Audrey Barton, Troy Cunningham, Ken Kilgore, Josh Wagstaff.
Staff: Mark Christensen, City Manager; Dave Stroud, Planning Director; Tippe Morlan, Senior Planner; Conrad Hafen, Assistant City Attorney; Gordon Miner, City Engineer; David Johnson, Economic Development Director; Nicolette Fike, Deputy Recorder.
Others: Daniel Herzog

Excused: Reed Ryan

1. **Pledge of Allegiance -** led by Commissioner Cunningham.

2. **Roll Call** – A quorum was present

3. **Public Hearing: Rezone from Regional Commercial to Planned Community and General Plan amendment from Office Warehouse and Regional Commercial to Planned Community for Wildflower Commercial located at SR-73 and Mountain View Corridor. DAI as applicant.**
Senior Planner Tippe Morlan presented the item. The applicant intends to develop a Business Park compatible with several commercial zones rather than a Regional Commercial shopping center in this location. Several potential zones have been identified for the future commercial uses and details will be finalized with each respective Village Plan submittal. Daniel Herzog with DAI was present as applicant.

Public Hearing Open by Chairman Troy Cunningham. No public comment was given. Public Hearing Closed by Chairman Troy Cunningham.

Commissioner Cunningham asked what the primary use of the community mixed use would be. Senior Planner Tippe Morlan noted that it was only approved for commercial in this southern portion. Village Plan 2 further north does have a mix and that will be addressed further with that application.

Motion made by Commissioner Wagstaff that the Planning Commission recommend to the City Council approval of the proposed Rezone and General Plan Amendment for Wildflower as described in Section C of this report and as depicted in the staff report with the findings and conditions. Seconded by Commissioner Anderson. Aye: Bryce Anderson, Audrey Barton, Troy Cunningham, Ken Kilgore, Josh Wagstaff. Motion passed 5 - 0.

4. **Public Hearing: Engineering Standards and Specifications Update. City initiated.**
City Engineer Gordon Miner presented the proposed changes. He noted that one significant change was a change to the Minor Arterial. Currently it really only has three lanes, it had no greater capacity than a Collector. They felt it was necessary to adjust that in the standards.

Public Hearing Open by Chairman Troy Cunningham. No public comment was given. Public Hearing Closed by Chairman Troy Cunningham.

Commissioner Kilgore noted some typos in the document.

Commissioner Barton received clarification about the median shown in the Minor Arterial cross-section. City Engineer Gordon Miner advised that the X was to indicate it was not mandatory, it is an option.

Commissioner Cunningham received clarification from City Engineer Gordon Miner that although lift stations were allowed in the past, the City doesn't want them anymore. The hurdle would be high for anyone to entertain the idea. The City would like to get off of the perpetual maintenance.

Commissioner Cunningham asked if the Jordan River required rip-rap; he recalled the preference was not to use it. City Engineer Gordon Miner advised that Forestry Fire & State Land regulates the Jordan River and this would pertain to other waterways in the City.

Motion made by Commissioner Kilgore to forward a positive recommendation to the City Council regarding these proposed revisions to the City's Standard Technical Specifications and Drawings. Seconded by Commissioner Barton. Aye: Bryce Anderson, Audrey Barton, Troy Cunningham, Ken Kilgore, Josh Wagstaff. Motion passed 5 - 0.

5. **Public Hearing: Code Amendment for Title 18 – Flood Plain. City initiated. (Item to be continued.)** Staff requested that this item be continued to a future meeting.

Public Hearing Open by Chairman Troy Cunningham No public comment was given. Public Hearing Closed by Chairman Troy Cunningham.

Motion made by Commissioner Barton to continue the item: Code Amendments for Title 18- Flood Plain, to a future date. Seconded by Commissioner Anderson. Aye: Bryce Anderson, Audrey Barton, Troy Cunningham, Ken Kilgore, Josh Wagstaff. Motion passed 5 - 0.

6. **Approval of Minutes: April 23, 2020**

Motion made by Commissioner Anderson to approve the minutes of April 23, 2020. Seconded by Commissioner Wagstaff. Aye: Bryce Anderson, Audrey Barton, Troy Cunningham, Ken Kilgore, Josh Wagstaff. Motion passed 5 - 0.

7. **Reports of Action.** – No Reports were needed.

8. **Commission Comments.** - No commissioner comments were given.

9. **Director's Report.** – Planning Director Dave Stroud advised that the planning department was still working mainly from home.
In response to Commissioner question City Manager Mark Christensen advised that even with the move to yellow conditions it would still be difficult to hold a Planning Commission meeting in the council chambers and still be 6 feet apart. The plan is to continue with the online meetings.

10. **Possible motion to enter into closed session** – No closed session was held.

11. **Meeting Adjourned Without Objection at 6:27 p.m. by Chairman** Troy Cunningham.

5-28-2020
Date of Approval

Planning Commission Chair

Deputy City Recorder

City of Saratoga Springs Corporate Seal State of Utah